# JOURNAL OF THE ROYAL STATISTICAL SOCIETY SERIES A

Digitized by Arya Samaj Foundation Chennai and eGangotri

Digitized by Arya Samaj Foundation Chennai and eGangotri

CC-0. In Public Domain. Gurukul Kangri Collection, Haridwar

Digitized by Arya Samaj Foundation Chennai and eGangotri

पुस्तकालय विज्ञान भवन, गुरुकुल कांगड़ी

विषय संख्या R 519.905
पुस्तक संख्या J82J V.1 1
पञ्जिका संख्या 4249

पुस्तक पर सर्व प्रकार के चिन्ह लगाना वर्जित है। कोई सज्जन पन्द्रह दिन से अधिक समय तक पुस्तक अपने पास नहीं रख सकते।

यह पुस्तक वितरित न की जाय
NOT TO BE ISSUED

CC-0. In Public Domain. Gurukul Kangri Collection, Haridwar

Digitized by Arya Samaj Foundation Chennai and eGangotri

सन्दर्भ ग्रन्थ
REFRENCE BOOK

CC-0. In Public Domain. Gurukul Kangri Collection, Haridwar

Digitized by Arya Samaj Foundation Chennai and eGangotri

CC-0. In Public Domain. Gurukul Kangri Collection, Haridwar

Digitized by Arya Samaj Foundation Chennai and eGangotri

CC-0. In Public Domain. Gurukul Kangri Collection, Haridwar

Digitized by Arya Samaj Foundation Chennai and eGangotri

CC-0. In Public Domain. Gurukul Kangri Collection, Haridwar

Digitized by Arya Samaj Foundation Chennai and eGangotri

CHECKED 1973
Initial .....

# JOURNAL

OF THE

# ROYAL

# STATISTICAL SOCIETY

## SERIES A (GENERAL)

*Founded 1834*

*Incorporated by Royal Charter 1887*

---

Vol. CXI—1948

---

LONDON:
ROYAL STATISTICAL SOCIETY
4, PORTUGAL STREET, W.C.2
1949

CC-0. In Public Domain. Gurukul Kangri Collection, Haridwar

Digitized by Arya Samaj Foundation Chennai and eGangotri

# ROYAL STATISTICAL SOCIETY

**Patron.**

**HIS MOST GRACIOUS MAJESTY THE KING.**

## COUNCIL AND OFFICERS.—1947–48.

**Honorary Vice-Presidents**

*(having filled the Office of President).*

THE RT. HON. VISCOUNT SAMUEL, G.C.B., G.B.E., D.C.L.
G. UDNY YULE, C.B.E., F.R.S.
PROFESSOR M. GREENWOOD, D.Sc., F.R.C.P., F.R.S.
THE RT. HON. LORD KENNET OF THE DENE, P.C., G.B.E., D.S.O., D.S.C.
PROFESSOR A. L. BOWLEY, C.B.E., D.LITT., Sc.D. D.Sc., F.B.A.
HECTOR LEAK, C.B.E.
THE RT. HON. LORD BEVERIDGE, K.C.B., LL.D., D.Sc., F.B.A.
ERNEST CHARLES SNOW, C.B.E., D.Sc
THE RT. HON. LORD WOOLTON, P.C., C.H., D.L., LL.D.

**President.**

DAVID HERON, D.Sc.

**Vice-Presidents.**

H. CAMPION, C.B.E.
R. GLENDAY, M.C.
PROFESSOR A. BRADFORD HILL, D.Sc., PH.D.
PROFESSOR E. S. PEARSON, C.B.E.

**Other Members of Council.**

PROFESSOR R. G. D. ALLEN, O.B.E., D.Sc.
M. S. BARTLETT, D.Sc.
SIR A. M. CARR-SAUNDERS, LL.D.
D. G. CHAMPERNOWNE.
H. E. DANIELS, PH.D.
D. J. DESMOND.
IRIS DOUGLAS.
D. J. FINNEY, Sc.D.
C. OSWALD GEORGE, PH.D.
R. F. GEORGE.
PROFESSOR M. GREENWOOD, F.R.S.
PROFESSOR A. BRADFORD HILL, D.Sc., PH.D.
J. O. IRWIN, Sc.D., D.Sc.
W. J. JENNETT.
PROFESSOR J. H. JONES, LL.D.
M. G. KENDALL.
P. LYLE.
SIR GEORGE MADDEX, K.B.E., F.I.A.
E. C. RHODES, D.Sc.
H. L. SEAL.
RICHARD STONE, C.B.E.
B. L. WELCH, PH.D.
G. RONALD WHITE.
JOHN WISHART, D.Sc.
J. R. WOMERSLEY.
F. YATES, Sc.D., F.R.S.

**Executive Committee.**

THE PRESIDENT.
THE EX-PRESIDENT.
THE VICE-PRESIDENTS.
THE HON. TREASURER.
THE HON. SECRETARIES.
PROFESSOR R. G. D. ALLEN, O.B.E., D.Sc.
PROFESSOR M. GREENWOOD, D.Sc., F.R.C.P., F.R.S.
H. LEAK, C.B.E.

519.905
I82J

**Honorary Treasurer.**

PROFESSOR J. H. JONES, LL.D.

**Honorary Secretaries and Editors.**

PROFESSOR A. BRADFORD HILL, D.Sc., PH.D.
C. OSWALD GEORGE, PH.D.
M. G. KENDALL.

**Honorary Foreign Secretary.**

PROFESSOR A. BRADFORD HILL, D.Sc., PH.D.

**Assistant Secretary.**

UNA M. CROKER.

पुस्तकालय विभाग
विषय सं० 519.905
पुस्तक सं० I82J
आ. पं. सं० 4249
V.111

**Librarian.**

J. A. KING.

**Bankers.**

ROYAL BANK OF SCOTLAND (DRUMMOND'S BRANCH), CHARING CROSS, LONDON, S.W. 1.

**Offices.**

4, PORTUGAL STREET, LONDON, W.C. 2.
(Telephone: HOLBORN 4283).

CC-0. In Public Domain. Gurukul Kangri Collection, Haridwar

110646
Digitized by Arya Samaj Foundation Chennai and eGangotri

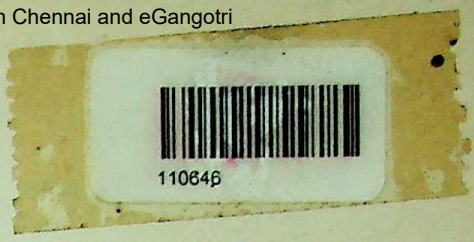


# CONTENTS

## VOL. CXI—YEAR 1948

### *Part I*, 1948


| | PAGES |
|---|---|
| On the Financial Position of the Society: The Inaugural Address of the President, Dr. DAVID HERON | 1–9 |
| Proceedings of the Meeting | 9–11 |
| Proceedings of a Special General Meeting of the Society held on November 20th, 1947 | 12–13 |
| The Collection of Morbidity Data from Hospitals. By H. COTTON | 14–32 |
| Discussion on the Paper | 32–43 |
| Miscellanea: | |
| On the Distribution in Time of the Births in Successive Generations. By P. H. LESLIE | 44–53 |
| A New Regression Analyser. By GUY H. ORCUTT | 54–70 |
| Reports from Council and Notices to Fellows: | |
| General Regulations for the 1948 and 1949 Certificate Examinations and for the 1949 Diploma Examination | 71–76 |
| Specimen Papers for the Diploma Examination | 77–79 |
| Reviews of Books | 80–84 |
| Statistical and Current Notes | 85–90 |
| Statistical and Economic Articles in Recent Periodicals | 91–94 |
| Periodical Returns: Revenue of the United Kingdom, 1947–48; Bank of England Weekly Return, 1947 | 95–97 |


### *Part II*, 1948


| | |
|---|---|
| Cost of Living Subsidies. A Discussion opened by Professor J. H. JONES | 99–111 |
| The Fire Census and Technical Field Intelligence Work of the Joint Fire Research Organization. By J. WALLACE | 112–126 |
| Discussion on the Paper | 126–132 |
| United Kingdom Merchant Shipping Statistics. By M. G. KENDALL | 133–144 |
| Miscellanea: | |
| Working Class Clothing Consumption, 1937–1938. By Mrs. K. H. Ross | 145–160 |
| Reports from Council and Notices to Fellows | 161–162 |
| Reviews of Books | 163–166 |
| Statistical and Current Notes | 167–170 |
| Statistical and Economic Articles in Recent Periodicals | 171–175 |
| Periodical Returns: Registration of the United Kingdom and Eire, 1943–47 | 176–179 |


CC-0. In Public Domain. Gurukul Kangri Collection, Haridwar

Digitized by Arya Samaj Foundation Chennai and eGangotri


*Part III*, 1948


| | PAGES |
|---|---|
| The Validity of Comparative Experiments. By F. J. ANSCOMBE | 181–200 |
| Discussion on the Paper | 200–211 |
| The Teaching of Statistics. A Discussion opened by Dr. J. WISHART | 212–229 |
| Medical Statistics. By Professor M. GREENWOOD, F.R.S. | 230–234 |
| Miscellanea: | |
| Percentage Inspection. By PRAN NATH | 235–237 |
| Proceedings of Sections | 238–239 |
| Reviews of Books | 240–247 |
| Statistical and Current Notes | 248–251 |
| Obituary: | |
| Clara Elizabeth Collet | 252–254 |
| Wesley Clair Mitchell | 254–255 |
| Statistical and Economic Articles in Recent Periodicals | 256–260 |


*Part IV*, 1948


| | |
|---|---|
| Consumer Expenditure in India, 1931–2 to 1940–1. By R. C. DESAI | 261–298 |
| Discussion on the Paper | 298–308 |
| Industrial Productivity in England and Scotland. By H. W. SINGER and C. E. V. LESER | 309–321 |
| Discussion on the Paper | 321–330 |
| Wholesale Prices in 1947. By THE EDITOR of *The Statist* | 331–345 |
| Annual Report of the Council | 346–363 |
| Proceedings of the One Hundred and Fourteenth Annual General Meeting | 364 |
| Proceedings of Sections | 365–368 |
| Reviews of Books | 369–373 |
| Statistical and Current Notes | 374–375 |
| Obituary: | |
| J. W. Verdier | 376 |
| Statistical and Economic Articles in Recent Periodicals | 377–382 |
| Additions to Library | 383–391 |
| Index to Vol. CXI (1948) | 393–395 |


NOTICE

THE Council of the Royal Statistical Society wish it to be understood that the Society is not responsible for the statements or opinions expressed in the Papers read before the Society or published in its *Journal*.

CC-0. In Public Domain. Gurukul Kangri Collection, Haridwar

Digitized by Arya Samaj Foundation Chennai and eGangotri

Vol. CXI.] [Part I.

# Journal of the Royal Statistical Society

SERIES A (GENERAL)

PART I, 1948

## On the Financial Position of the Society

[The Inaugural Address of the President, Dr. David Heron, delivered to the Royal Statistical Society on 20th November, 1947]

My first duty is to thank the Fellows of the Society for the honour they have done me in electing me as their President. I am only too sensible of the difficulty I shall have in maintaining the traditions of this high office, a difficulty which has been increased by the fact that I succeed Lord Woolton, who by his services to his country and to the Society has added distinction to the long line of distinguished Presidents. I am indeed rather surprised to find myself in such company.

Lord Woolton's two years of office have been marked by the greatest expansion that has ever taken place in the membership of the Society, for during that time no fewer than 490 Fellows were elected or restored to the roll, bringing the number of Fellows at the end of May, 1947, up to the record total of 1,748. This rapid development has made far more urgent the consideration of a number of problems which have faced the Society for some time, and I therefore feel that I can best serve the interests of the Society by dealing this evening with some aspects of its recent history and with some of the tasks that lie before it.

The Society celebrated its Centenary in 1934, and as one of the results of its recent rapid expansion is that more than two-thirds of the present Fellows have been elected since that date, it is convenient to consider developments in the last thirteen years. The previous history of the Society has been very ably told by Dr. Bonar and Mr. Macrosty in the *Annals of the Royal Statistical Society*, 1834–1934, and all Fellows elected since the Centenary should study that fascinating volume. The subsequent history of the Society is given in outline in the Annual Reports of the Council. These are published in the *Journal*, and I shall deal only with some of the main features that they reveal.

The principal function of the Society has always been the reading, discussion and publication of contributions by Fellows to statistical knowledge, and those published in the *Journal* and the *Supplement* during the last thirteen years have included some of the most valuable and influential in the history of the Society. I wish that I could advise Fellows to complete their sets of *Journal* and *Supplement* back to at least the Centenary volume. Unfortunately one volume of the *Supplement* is already out of print, and the supply of others is almost exhausted, but I hope that at no distant date we shall be able to obtain sufficient supplies of paper to enable them to be reprinted.

The work of the various special Committees appointed by the Council has been of hardly less importance. During the period under review the Reports of four of these Committees have been outstanding. These are:

1. The Committee on Official Statistics, under the chairmanship of Professor M. Greenwood;
2. The Committee on the Status of Statisticians, under the chairmanship of Dr. E. C. Snow;
3. The Examinations Committee, under the chairmanship of Mr. M. G. Kendall; and
4. The Committee on the Teaching of Statistics, under the chairmanship of Professor E. S. Pearson.



CC-0. In Public Domain. Gurukul Kangri Collection, Haridwar

Digitized by Arya Samaj Foundation Chennai and eGangotri



The Reports of these Committees, with some amendments and additions, were approved and issued by the Council.

The Committee on Official Statistics was asked to consider and report upon the organization of statistics in Government Departments before, during and after the war with special reference to—

(*a*) The staffing of Departments;
(*b*) the relations between Departments;
(*c*) the advantages and disadvantages of alternative schemes of post-war organization.

After dealing with the pre-war position and the war-time developments, it made the following recommendations:

(*a*) Every major Department should have a statistical branch under the direction of an administrative officer; and minor Departments should either have a smaller unit or work under the guidance of the statistical branch in a major Department or of the Central Statistical Office.

(*b*) The collection of data outside Departments should be left, as at present, to the branches whose administrative duties bring them into contact with the persons supplying the information; but co-ordination is required within Departments.

(*c*) Certain statistical posts should be of grades equivalent to that of the more senior administrative officers.

(*d*) Recruitment of the administrative personnel of statistical branches should be from persons with mathematical or statistical qualifications, and transfer between Departments should be permitted where necessary.

(*e*) An endeavour should be made to post selected junior administrative officers to the statistical branch as part of their training.

(*f*) Technical posts of statistician should be created where Departments consider them necessary.

(*g*) Full opportunity should be given for a technical statistician who showed administrative ability to be transferred to the administrative grade.

(*h*) The system of giving free courses in statistics to selected members of statistical branches should be extended and facilities given for advanced study.

(*i*) Opportunity should be given for members of statistical branches to become familiar with the practical aspects of the matters with the statistics of which they are dealing.

(*j*) Firm co-ordination of the statistical work of different Departments is necessary. This may best be effected by a Central Statistical Office acting with a small Committee selected from among the heads of statistical branches in the major Departments.

(*k*) The Committee should be small, should fill its own vacancies, should be empowered to initiate subjects for discussion, and to issue reports on statistical matters not falling within the province of any one Department, subject, on major matters, to Cabinet authority.

(*l*) The Central Statistical Office should be relieved of routine analysis and administration, should, *inter alia*, undertake research work, should act generally as a co-ordinating body, should compile statistical information required for the Cabinet and its Committees on subjects where the interests of more than one Department are concerned, and should secure prompt and full publication of Government statistics.

(*m*) There should be a transfer of personnel from Departments to the Central Office and *vice versa*, and the staff of the latter should be available for rendering assistance to Departments.

(*n*) Certain Departments may require the services of a mathematical statistician, and should be provided with those services either by the appointment of a full-time officer, the loan of a suitable officer from the Central Statistical Office or the Department of Scientific and Industrial Research, the use of an advisory panel of experts, or perhaps by engaging a man specially from industry for a time.

(*o*) The Central Statistical Office or some other Government organization should ensure that the most effective use is made of modern machine methods.

(*p*) The position of the Foreign and Colonial Offices, the Dominions Office and the India Office requires special consideration; in the Colonial Office, at least, a statistical branch is necessary.

The Report was sent to H.M. Treasury as a Memorandum on Official Statistics and there has been a strong demand for it since it became available to the public. The then Prime Minister, in answer to a question in the House of Commons, stated that this valuable Memorandum was being carefully studied by the Departments concerned, and that they would probably wish to discuss it

CC-0. In Public Domain. Gurukul Kangri Collection, Haridwar

Digitized by Arya Samaj Foundation Chennai and eGangotri



with representatives of the Society. Ultimately a deputation consisting of Dr. Snow and other members of the Committee met officers of the Treasury and of certain other Departments, who stated that the Memorandum had been of great help to the Government, and that its main recommendations were being favourably considered.

The Committee on the Status of Statisticians was somewhat less fortunate. It had recommended that, in order to improve and establish the status of statisticians, the Society should assume the additional function of an examining body and should confer Diplomas and Certificates on those who were successful in passing examinations to be conducted by the Society, whether the examinees were Fellows of the Society or not. This could not be done, however, under the powers granted by our present Charter, and accordingly the Society, after careful consideration, authorized the Council to present a Petition to the Privy Council for the grant of a Supplemental Charter.

This was duly done, but a Counter-Petition was lodged by fourteen university teachers, statisticians and economists, and this was supported by a letter addressed to the Privy Council by the Council of the Royal Economic Society. We were ultimately advised that in view of this opposition it was very unlikely that a Supplemental Charter would be granted, and it was therefore decided to withdraw our Petition and to confine the examinations to Fellows of the Society, as this could be done under the provisions of our present Charter.

The necessary authority was given to the Council under the new Byelaws and an Examinations Committee was appointed which prepared a detailed scheme for conducting examinations, open only to Fellows, for the Certificate of the Society, including a syllabus, governing regulations, and a set of specimen examination papers. The first examination will be held next month, and it is hoped that this scheme will not throw any financial burden on the Society.

The Report of the Committee on the Teaching of Statistics emphasized the need not only for an increase in the number of trained statisticians, but also for the provision of training in statistics as ancillary to other subjects. It recommended that there should be three main types of courses: (1) elementary courses intended to make all students of the social and natural sciences familiar with elementary statistical ideas and methods; (2) more advanced courses to enable such students to apply statistical methods to the branches of science in which they were mainly interested; and (3) advanced and post-graduate courses associated with research, together with extra-mural courses for those who, already in employment, realized the need for systematic statistical training.

Copies of this Report have been sent to all university institutions in the country and throughout the Commonwealth, and it is already receiving careful consideration. The Report is on sale as a reprint and will shortly appear in the *Journal*.

I must also call attention to the work of the special Sections of the Society, which now consist of the Research Section, the Industrial Applications Section (with local Groups in London, Birmingham and Sheffield, together with a North-Eastern Group at Newcastle-on-Tyne which has a Sub-Group on Tees-side), and the Study Section, with a Study Circle to conduct research on the economic criteria for the stratification of social and economic surveys.

I cannot emphasize too strongly the importance of these Sections to the work of the Society. They are not only advancing the frontiers of statistical theory and practice, but also, by enlisting the interest of considerable numbers of men and women who are not yet Fellows, are proving a very valuable recruiting ground for the Fellowship. It should be realized, however, that the day-to-day work of these Sections makes very heavy demands on the time and energy of their Honorary Officers and the members of their various Committees; every effort must therefore be made to lighten their burdens and to encourage them in this important work by providing further assistance to them from the Secretariat of the Society, and the staff of the Society must be increased to enable this to be done.

I now come to my main theme, the financial position of the Society. I propose to show that, although drastic economies in operating the Society since the outbreak of war and various special circumstances affecting those years have on the whole enabled income to cover expenditure, this cannot continue, that the expenses of the Society are bound to increase substantially, and that there is therefore an urgent need for a considerable increase in income. Table A gives for each of the last thirteen years total income and expenditure and the excess of income over expenditure or expenditure over income, together with the closely related changes in the numbers of Fellows. Detailed summaries of the revenue accounts are given in the Appendix.

CC-0. In Public Domain. Gurukul Kangri Collection, Haridwar

Digitized by Arya Samaj Foundation Chennai and eGangotri



TABLE A

| Year | *Fellowship* | | | | *Finance* | | | |
|---|---|---|---|---|---|---|---|---|
| | *Number of Fellows at end of year.* | | *Changes in year* | | | | *Excess of* | |
| | *Total* | *Life Fellows included* | *Gains by Election, etc.* | *Losses by Death, etc.* | *Income* | *Expenditure* | *Income over Expenditure* | *Expenditure over Income* |
| 1933 | 1,024 | 205 | — | — | £ | £ | £ | £ |
| 1934 | 1,037 | 207 | 62 | 49 | 2,889 | 3,315 | — | 426 |
| 1935 | 1,051 | 205 | 67 | 53 | 3,069 | 3,272 | — | 203 |
| 1936 | 1,049 | 200 | 62 | 64 | 4,097 | 4,372 | — | 275 |
| 1937 | 1,063 | 203 | 59 | 45 | 3,178 | 3,241 | — | 62 |
| 1938 | 1,083 | 205 | 76 | 56 | 3,504 | 3,376 | 128 | — |
| 1939 | 1,108 | 209 | 64 | 39 | 3,262 | 3,020 | 241 | — |
| 1940 | 1,079 | 205 | 47 | 76 | 2,837 | 2,720 | 117 | — |
| 1941 | 1,074 | 204 | 60 | 65 | 2,512 | 2,635 | — | 123 |
| 1942 | 1,079 | 198 | 74 | 69 | 2,922 | 2,848 | 74 | — |
| 1943 | 1,139 | 195 | 121 | 61 | 2,967 | 2,773 | 194 | — |
| 1944 | 1,269 | 209 | 159 | 29 | 3,029 | 2,995 | 35 | — |
| 1945 | 1,417 | 241 | 177 | 29 | 3,819 | 3,300 | 519 | — |
| 1946 | 1,648 | 287 | 287 | 56 | 5,344 | 5,205 | 139 | — |

*Notes.*—(*a*) Life Composition Fees are excluded.
(*b*) Before 1938, only cash receipts and cash payments are included.
(*c*) In Tables A and B and in the Appendix some apparent slight discrepancies arise from the fact that each amount is given to the nearest £.

The accounts of the Society since the outbreak of war, with the single exception of those for 1941, have thus shown excesses of income over expenditure, but a closer examination of the figures and of the conditions which produced them indicates that the financial position of the Society cannot be regarded as satisfactory. During the war years every possible economy was effected in the running of the Society, with the result that many items of expenditure which had merely been postponed must now be incurred—at a time when prices continue to rise.

Then, increasing costs have to some extent been offset by the increase in the income of the Society from annual subscriptions, arising from the increase in the number of Fellows. Thus the small surplus of £139 in 1946 may be said to be due to the annual subscriptions of the exceptionally large number of Fellows elected in that year; had the number of Fellows remained stationary, the year 1946 would have shown a substantial loss instead of a small surplus.

It should also be noted that the sale prices of the *Journal* and the *Supplement* were increased in 1938 and again last year, so that the publications of the Society which are supplied to Fellows are heavily subsidized by the profits upon the sale of these publications to the general public.

Lastly, expenditure in the greater part of the war years was less than normal owing to the total or partial suspension of many of the activities of the Society and of the Sections, including the suspension of the issue of the *Supplement*. This was not done as a measure of economy; it became difficult to hold meetings in London, and Fellows and members of the Sections were too fully occupied in the prosecution of the war to spare time for the preparation of papers or participation

CC-0. In Public Domain. Gurukul Kangri Collection, Haridwar

Digitized by Arya Samaj Foundation Chennai and eGangotri



in discussion meetings. The effect of the suspension on the finances of the Society in those years was, however, substantial.

As a result of these factors, income has, on the whole, exceeded expenditure since the outbreak of war, but we can hardly expect this to continue with only our present sources of income. The fall in the value of money has not yet been fully reflected in the expenditure of the Society, and we must expect that the additional income arising from the normal healthy growth in the number of Fellows which we may reasonably anticipate will be more than offset by increases in the cost of producing *Journal* and *Supplement* and in the cost of staff salaries and other administrative expenses.

Nor can we obtain much comfort from the Balance Sheet of the Society, summarized below:

TABLE B.—*Balance Sheets at December* 31, 1933 *and* 1946

| *Dec.* 31, 1933 | *Liabilities* | *Dec.* 31, 1946 |
|---|---|---|
| £ | | £ |
| 347 | Advance Payments and Sundry Creditors | 1,774 |
| 1,640 | Life Composition Fee Fund | 5,818 |
| 8,088 | Accumulated Fund of the Society | 7,654 |
| 10,075 | | 15,246 |
| 1,200 | Building Fund | 1,149 |
| 350 | Frances Wood Memorial Fund | 542 |
| 11,625 | Total | 16,937 |

| £ | *Assets* | £ |
|---|---|---|
| 97 | Advance Payments and Sundry Debtors | 513 |
| 9,479 | Investments | 12,679 |
| 499 | Cash | 1,912 |
| — | Interest Accrued (gross) | 141 |
| 10,075 | | 15,246 |
| 1,200 | Building Fund: Investments | 1,149 |

*Frances Wood Memorial Fund*

| | | | | |
|---|---|---|---|---|
| | £250 | Investments | £300 | |
| 350 | 100 | Cash, etc. | 242 | 542 |
| £11,625 | | | | £16,937 |

*Note.*—The market value of all investments exceeded the value at which they appeared in the Society's books by £4,032 at the end of 1933, and by £7,382 at the end of 1946.

At the end of last year the only free funds were the Accumulated Fund of the Society, amounting to £7,654, and the Building Fund of £1,149, a total of £8,803, and it must be remembered that the relative value of these free funds has been substantially reduced by the marked rise in prices. It is true that there was at the end of last year an investment reserve of some £7,000 arising from the excess of the market values of the Society's investments over the values at which they appeared in the Society's books, but the recent fall in investment values reduced this at one time to approximately £4,000, and the only safe course is to keep this investment reserve intact so far as conditions allow us to do so.

The income of the Society on its present basis is thus unlikely to be sufficient to cover its expenditure, and it is certain that expenditure will have to be substantially increased on housing, on the library, on staff, and on the activities of the Sections, if the Society is to operate with full efficiency.

CC-0. In Public Domain. Gurukul Kangri Collection, Haridwar

Digitized by Arya Samaj Foundation Chennai and eGangotri



The Society is now quite inadequately housed. The present accommodation is insufficient for even the existing staff; indeed every meeting of the Council or of a Committee makes a serious interruption in the ordinary office work since the Council Room has to be used as the Society's main office. Additional space for the staff is thus urgently required, and there is need for a room suitable for meetings of small Committees and of groups of Fellows interested in special problems. The rooms allotted to the Library are so restricted as to hamper very seriously the work of the Librarian, who finds it almost impossible to maintain a satisfactory system of classification and storage, there is no room for expansion, and the gangways are far too narrow for the tall book-stacks which have to be used. Further Library space is also required for other purposes; we need additional room for those who use the Library, a room equipped with a modest battery of the simpler calculating machines and an adequate supply of the usual statistical tables to enable investigators to work efficiently and in reasonable comfort.

It is thus essential that further and better accommodation should be secured for the offices and the Library of the Society. As the nursery of the science of statistics and the central Statistical Society of the Commonwealth, it should certainly possess a home worthy of its place among the learned Societies.

You are aware that we are dependent upon other institutions for a Lecture Theatre in which to hold our General Meetings and meetings of Sections in London and elsewhere. To obtain for ourselves such a magnificent theatre as the one in which we are now assembled is perhaps beyond our immediate objectives, and I take the opportunity of expressing again to the Governors of the London School of Hygiene and Tropical Medicine our gratitude for the generous facilities which they grant to us.

This is not a new problem in the history of the Society. In its first fifty years it was never satisfactorily housed, and there were frequent moves from one inadequate headquarters to another, punctuated by repeated applications to H.M. Government for the grant of rooms in Somerset House, Burlington House and elsewhere, all unsuccessful. It was not until 1884 that reasonably satisfactory accommodation was found at No. 9, Adelphi Terrace, where the Society remained for fifty-two years.

The Society's anxieties were renewed, however, in 1931, when on the expiry of a twenty-one year lease only an annual tenancy could be obtained, and finally in August, 1935, the Society received notice to quit No. 9, Adelphi Terrace by March, 1936. In this emergency the London School of Economics offered accommodation at No. 4, Portugal Street. The space available was somewhat less than at No. 9, Adelphi Terrace, but no satisfactory alternative could be found, and the offer of the London School of Economics was therefore gratefully accepted. A lease of the greater part of No. 4, Portugal Street was granted to the Society for a term of twenty-one years expiring in February, 1957, at a rent of £380 per annum, the same as that paid at Adelphi Terrace. I ought to add that during the whole of our present tenancy we have always received from the officers and servants of the London School of Economics the most friendly assistance whenever this was required.

The lease of our present premises will thus expire in a little over nine years, and although the London School of Economics promised in 1935 to consider any application from the Society for permanent accommodation when rebuilding is continued, it will be prudent to assume that the School will not be able to satisfy the greatly increased requirements of the Society.

There are urgent calls for additional expenditure on the Library other than on the provision of additional space. The most essential need is for the preparation and publication of an up-to-date Catalogue, which will be a guide and key to the resources of the Library and also provide an adequate subject classification. Fellows will never be able to make full use of the Library until they are able to find out easily and quickly all that it contains on any special subject, and to obtain just as easily from the shelves the books they require. That a new Catalogue is necessary is sufficiently indicated by the fact that the last was issued in 1921, and although there is a card-index of additions since that date, it requires revision and editing. When the Catalogue has been completed arrangements should be made for the prompt issue of quinquennial supplements so that the published Catalogue may be, as far as possible, always up-to-date. It will be quite impossible to undertake this work without additional Library staff, and this will involve a further demand for space to accommodate them.

It may be appropriate here to express the hope that the admirable Bibliographies prepared

CC-0. In Public Domain. Gurukul Kangri Collection, Haridwar

Digitized by Arya Samaj Foundation Chennai and eGangotri



under the auspices of the Sections, the "Bibliography of Agricultural Statistics" and "Recent Advances in Mathematical Statistics" may be continued and perhaps extended into other fields.

There are also heavy arrears of binding and re-binding to be overtaken, and in spite of the difficulty in getting such work done at this time, and its greatly increased cost, the leeway must be made up at the earliest possible moment to prevent further deterioration of the books in the Library.

The recent increase in our numbers has also emphasized the fact that there is in progress a certain change in the character of the Fellowship of the Society. It has always been and will, I hope, always remain, primarily one in which the professional and specialized interests of the Fellows are subordinate to the true purpose of a learned Society, but the growth of membership arises from a quickened interest not only in the pure theory of statistics, but also in the practical application of modern statistical methods in government, science, commerce and industry. If the Society is to be worthy of its past, it must be prepared for further developments, particularly in its special Sections, which have already made such valuable contributions to the Society, and may well be extended to other fields of statistical activity and to other areas, in order to satisfy the very varied requirements of the Fellows.

The Society can hardly claim to be a National Society unless it takes active steps to foster the development of statistics in the provinces as well as in London. It may therefore be found desirable, in order to sustain and increase the interest already aroused by the Industrial Applications Section, to hold from time to time additional Ordinary General Meetings of the Society at appropriate provincial centres. At these, papers on subjects of special local interest as well as others on more general topics could be read and discussed.

This has already been done in 1921, when an Ordinary General Meeting of the Society was held at Leeds to hear a paper on the Distribution of Employment in the West Riding Textile Industry by Mr. A. Shimmin.

Such developments will involve an increase, probably a substantial increase, in the expenses of the Sections and in administrative expenses generally. The staff of the Society is already so fully occupied that the burden thereby thrown on the Honorary Officers of the Society and of the Sections has become too heavy. We must therefore contemplate an enlargement and reorganization of the staff of the Society.

Our opportunities for service to statistics and to the Fellows of the Society have outgrown our resources, and we must therefore take whatever steps are possible to obtain an assured annual income considerably greater than that which we at present enjoy. In the present economic condition of the country it would be idle to suggest that all the desirable and even necessary improvements in the organization of the Society to which I have referred could at once be effected even if the necessary additional income were available, but we should do all that we can now to build up a Development Fund in order to be able to take advantage of opportunities as they occur.

This must come in the first place from the Fellows of the Society, for whatever assistance we may be able to obtain from outside the Society for re-housing or Library, we can hardly seek assistance, or indeed deserve it, until we ourselves have done all that is reasonably possible.

I therefore do not hesitate to call attention to the very great disparity between the annual subscription payable by Fellows, which has remained unchanged at two guineas since the foundation of the Society in 1834, and the price now paid by the public for the publications of the Society, which are issued free of charge to Fellows. Up to 1918 the sale price of the *Journal* was £1 per annum; it was increased to £1 10s. per annum in 1918, to £2 in 1938, and is now £3 per annum. Similarly the sale price of the *Supplement* on its first issue in 1934 was 10s. per annum; this was increased to 15s. in 1938, and is now £1 10s. per annum. For an annual subscription of two guineas, Fellows may thus receive publications which are sold at £4 10s. per annum, and the whole cost of the publication and distribution of both *Journal* and *Supplement*, to both Fellows and the public, has since 1938 been covered by the amount received from their sale to the public.

I therefore suggest that the time has come to ask Fellows to agree to an increase in their contributions to the Society, and at the Special General Meeting which follows you will be invited to consider a recommendation by the Council that the annual subscription and the composition fees should be increased by fifty per cent., except in the cases of Fellows who shall have attained the age of sixty or paid at least twenty-five annual subscriptions.

There are two other matters to which I wish to refer before I close. A few weeks ago the Statistical and Social Inquiry Society of Ireland celebrated its Centenary and thus takes its place

CC-0. In Public Domain. Gurukul Kangri Collection, Haridwar

Digitized by Arya Samaj Foundation Chennai and eGangotri



beside the Manchester Statistical Society and the Royal Statistical Society. I am glad that Dr. Oswald George, one of our Honorary Secretaries, found it possible at short notice to make the journey to Dublin to be present on that occasion, and to convey to a sister society our congratulations and good wishes. We all hope that the second century of this distinguished society may be even more active and prosperous than its first has been.

The other matter I wish to mention is a domestic one. In happier days it was our practice to send to Fellows at the beginning of each Session a list of a dozen or so papers which had been offered to the Society and to state that from these, and others which might become available later, the papers to be read at the Ordinary General Meetings of the Society would be chosen. In recent years, however, Professor Bradford Hill and his colleagues have been living a hand-to-mouth existence so far as papers are concerned, and have found very great difficulty in maintaining adequate sessional programmes. I therefore appeal to all Fellows, and especially to the younger and newer Fellows, to submit to the Society the results of their work, in order that thereby the meetings of the Society and its Sections and the issue of the *Journal* and *Supplement* may be continued without interruption. The Honorary Secretaries will be glad to supply particulars of the usual procedure.

In this connection I desire to refer to a very valuable Report on Some Problems of Social and Economic Research that arise from the relations between Government Departments and Academic Bodies, issued by the National Institute of Economic and Social Research.

This is not the occasion for dealing with the Report as a whole, and I therefore call attention only to its recommendation that consideration be given to the production of an inventory of the major collections of statistical and other material available in Government Departments, and that every encouragement should be given to responsible research workers who desire to study such material. In an Appendix to the Report there is given a long list of major collections of statistical material which are known to exist in Government Departments or could readily be compiled.

This Society at its Ordinary and Sectional Meetings and in its widely circulated *Journal* and *Supplement* offers an ideal field for the publication and discussion of the analysis of such material. I therefore hope that Fellows who undertake such work may, in due course, submit the results of their investigations to the Society.

The character of this address has, of course, been influenced by the fact that I have had the honour of serving as your Honorary Treasurer for the past eight years. During that time I watched over the finances of the Society with some anxiety, and was being forced to the conclusion that its income, on the present basis, would be insufficient to cover the inevitable increase in its expenditure. It thus seemed appropriate that what I had intended as my swan-song as Treasurer should become this presidential address.

I must now commend to your sympathy our new Honorary Treasurer, Professor J. H. Jones, who assumes office at a particularly difficult point in the financial history of the Society. It is for the Fellows to furnish to him and to the Council the additional financial resources which are now required to enable the Society to play its full part in the life of the nation.

## APPENDIX

### *Income* (£)

| *Year* | *Annual Subscriptions.* | | *Sales* | | *Interest (gross)* | *Royal Economic Society* | *Other* | *Special* | *Total* | *Excess of Income over Expenditure* | *Composition Fees* |
|---|---|---|---|---|---|---|---|---|---|---|---|
| | *Fellowship* | *Sections* | *Journal, etc.* | *Supplement* | | | | | | | |
| 1934 | 1,625 | 9 | 725 | 31 | 442 | 30 | 14 | 14 | 2,889 | −426 | 137 |
| 1935 | 1,673 | 5 | 797 | 67 | 436 | 53 | 39 | — | 3,069 | −203 | 84 |
| 1936 | 1,672 | 8 | 771 | 95 | 436 | 50 | 30 | 1,036 | 4,097 | −275 | 44 |
| 1937 | 1,692 | 12 | 809 | 112 | 439 | 75 | 40 | — | 3,178 | −62 | 92 |
| 1938 | 1,722 | 3 | 1,091 | 150 | 448 | 50 | 40 | — | 3,504 | 128 | 105 |
| 1939 | 1,701 | 4 | 920 | 119 | 436 | 50 | 32 | — | 3,262 | 241 | 58 |
| 1940 | 1,598 | — | 695 | 34 | 441 | 50 | 18 | — | 2,837 | 117 | 21 |
| 1941 | 1,489 | — | 448 | 69 | 449 | 50 | 7 | — | 2,512 | −123 | 53 |
| 1942 | 1,635 | — | 664 | 108 | 459 | 50 | 6 | — | 2,922 | 74 | 116 |
| 1943 | 1,778 | — | 655 | 23 | 454 | 50 | 9 | — | 2,967 | 194 | 105 |
| 1944 | 1,907 | 5 | 572 | 26 | 458 | 50 | 12 | — | 3,029 | 35 | 389 |
| 1945 | 2,266 | — | 949 | 69 | 481 | 50 | 5 | — | 3,819 | 519 | 767 |
| 1946 | 2,706 | 153 | 1,711 | 177 | 541 | 50 | 7 | — | 5,344 | 139 | 1,041 |

CC-0. In Public Domain. Gurukul Kangri Collection, Haridwar

Digitized by Arya Samaj Foundation Chennai and eGangotri



*Expenditure* (£)

| *Year* | *Rent* | *House Expenses* | *Salaries and Wages* | *Pensions, etc.* | *General Meetings* | *Expenses of Sections* | *Publication and Distribution Expenses* | | *Library* | *Other* | *Special* | *Total* |
|---|---|---|---|---|---|---|---|---|---|---|---|---|
| | | | | | | | *Journal* | *Supplement* | | | | |
| 1934 | 380 | 144 | 1,011 | — | 125 | 81 | 814 | 248 | 103 | 204 | 205 | 3,315 |
| 1935 | 380 | 135 | 1,071 | — | 137 | 53 | 881 | 233 | 117 | 251 | 14 | 3,272 |
| 1936 | 380 | 136 | 1,040 | 48 | 131 | 59 | 985 | 195 | 96 | 265 | 1,036 | 4,372 |
| 1937 | 380 | 146 | 1,022 | 63 | 124 | 59 | 798 | 251 | 157 | 241 | — | 3,241 |
| 1938 | 380 | 133 | 924 | 218 | 129 | 53 | 972 | 171 | 153 | 244 | — | 3,376 |
| 1939 | 380 | 137 | 859 | 199 | 97 | 32 | 764 | 190 | 146 | 215 | — | 3,020 |
| 1940 | 380 | 143 | 783 | 189 | 44 | 2 | 815 | 6 | 130 | 228 | — | 2,720 |
| 1941 | 380 | 212 | 809 | 189 | 36 | — | 496 | 95 | 32 | 148 | 239 | 2,635 |
| 1942 | 380 | 207 | 1,028 | 189 | 55 | 2 | 456 | 110 | 80 | 154 | 188 | 2,848 |
| 1943 | 380 | 202 | 1,033 | 134 | 67 | 7 | 575 | — | 46 | 182 | 146 | 2,773 |
| 1944 | 380 | 229 | 990 | 39 | 158 | 10 | 633 | — | 82 | 218 | 256 | 2,995 |
| 1945 | 380 | 232 | 1,164 | 39 | 161 | 42 | 791 | — | 120 | 334 | 36 | 3,300 |
| 1946 | 380 | 304 | 1,284 | 239 | 198 | 219 | 1,355 | 481 | 105 | 572 | 67 | 5,205 |

NOTES :—

(*a*) Life Composition Fees are excluded from Income and Expenditure and are carried to the Life Composition Fee Fund.
(*b*) Before 1938, only cash receipts and cash payments were included in Income and Expenditure.
(*c*) Special Income included £318 for Compensation for Disturbance and £718 from the Building Fund in 1936.
(*d*) Special Expenditure included (1) £97 for Shelving and Library Assistance and £108 for Centenary Expenses in 1934, (2) £1,036 for Removal Expenses in 1936, and (3) £504 for War Damage Insurance, £96 for Emergency Transport, £123 for Fire Watching and £208 for Legal Charges in 1941–6.

## PROCEEDINGS OF THE MEETING.

Lord WOOLTON, in proposing the vote of thanks: I claim what I believe is the traditional right of the retiring President to have the pleasure of congratulating the new President on his accession to office and of thanking him for the paper that he had read to us. He comes as the new President, as a very old friend of many of us, and certainly of the Society, and I hope he will have as much pleasure in the occupation of his office as I had.

Dr. Heron's paper, as he has said, is a paper drawn from the painful experience of being the Treasurer. I should think my old friend, J. H. Jones, must be extremely grateful to him for having eased his path. I do not know what we are going to hold the next meeting for except to comply with the rules and regulations, because after the appeal of Dr. Heron we should indeed be poor, both in spirit and in courage, if we did not see to it that the finances of the Society were made adequate. The part of the paper which Dr. Heron did not read was the one which I thought had the widest public significance. He has given us a very clear lead for the future, and I was naturally most interested in the observations in his paper on the use of statistics in Government departments. That is a very immediate problem, immediate because it is so important that departmental statisticians should be competent and should be reasonably independent. One of the greatest dangers that can befall the life of a Minister, except by inadvertence, is to be surrounded with people who tell him exactly what he would like to know, and the value of a first-class statistician in a department who tells him what the facts are whether he likes them or not is of the greatest possible public importance.

The other point to which Dr. Heron referred in his paper about the value of a Central Statistical Department is of even more importance, because it is that Central Statistical Department which advises the whole of His Majesty's Ministers on the statistical position. It is perfectly true that those who have been fortified only by a classical education might not be able to get the value that is there, but in these days—and they are likely to continue irrespective of the political complexion of Governments—when the State is making itself responsible for so much, it is important to ordinary people that Ministers should know the facts of the situation. Every time I read stories of disasters that have unexpectedly befallen this country, I cannot help wondering whether a more careful reading of history and a study of the statistical facts of the past might not have prevented us from falling into some of our troubles. The truth is that physical nature and human nature alters very little throughout the decades, and even perhaps throughout the centuries, and when I hear of unexpected crop failures, then I wonder whether it might have been possible with a little more careful study to make plans that would have avoided any discomfort to the public. We have an immediate one in front of us now. There has been a drought in this country for a few weeks and we are going to have a potato shortage. That is not at all exceptional in the history of growing potatoes in this country; it has all happened before, and as Dr. Heron knows, this is just one of the subjects on which a careful reading of the statistics of the past enables Ministers in charge to make provision which will avoid any public suffering.

CC-0. In Public Domain. Gurukul Kangri Collection, Haridwar

Digitized by Arya Samaj Foundation Chennai and eGangotri



There is another illustration I can give you of a practical nature. Anyone who reads the statistics of bread rationing recognizes bread rationing saves ·275 per cent. of the available wheat in the country, at a cost of £350,000 and the employment of 2,000 people. There, I am quite certain, is an instance in which our present Government have just not gone to the trouble to look at the figures and let their policy be guided by them.

Dr. Heron, when he was statistical adviser to the Minister of Food, was able to forecast in much more difficult circumstances than the present. He could suggest to me what would be the probable sinkings of food ships by submarines. He had not a lot of data, but he was able to tell me that on his estimates one-third of the foodstuffs which were shipped from foreign ports to this country would fail to arrive and, to him, let me here have the opportunity of paying tribute. It was because of that precise estimate that we owed so much of the continuance of our food supplies during the time when he and I were happily associated together. To get the right decisions involves something besides a statistician; it involves a Minister who will read the statistics when he gets them, and who, when he finds that the statistical facts and his political convictions are not in harmony, will have the courage to abandon the thing of lesser importance, namely, his political convictions!

Turning to another part of Dr. Heron's paper, I think he has rendered a service to the Society, and I hope his paper will be very widely read because he has put forward this plea, that those who use statistics should recognize the importance of having a statistical home in this country. This garret life which our Society is leading now is quite unworthy of it, and I would go so far as to say that it is neither a good thing for the Society nor for the nation that we should get accustomed to the idea that austerity is necessary. I believe we shall render much better service if we believe in the possibility of getting back to a decent standard of living. The fact that there are 98 applications for Fellowship of this Society indicates the growing strength and usefulness of the Society, and I hope Dr. Heron will not be depressed by economic circumstances, however depressing they are; I hope that during the course of his Presidency he will go out for a new statistical home for this Society, and one which will be worthy of it.

I am sure that the Fellows of the Society will help Professor Jones to meet the day-to-day needs of the Society, but the issue of a statistical home is not, I think, a matter that properly falls only within the province of the Fellows. There are very many of us who are engaged in commercial life who are very deeply indebted to the statisticians who help to guide our decisions, and I am quite certain that if you made an appeal to the commercial houses who employ statisticians to subscribe each a sum of £100 in order that we might continue to render to them the services which statisticians have rendered in the past, I believe there would be an immediate response, especially as they would be able to charge it as a business expense.

It has been a great pleasure to have the honour of proposing this vote of thanks to Dr. Heron, and to wish him great happiness in his occupancy of the chair.

Professor MAJOR GREENWOOD in seconding the vote of thanks said: I am very sorry that the indisposition of Dr. Snow, whose duty it was to second this vote, gives me the opportunity of doing so, but I should be rather inhuman if I did not welcome the opportunity because the President and I are very old friends indeed. We both sat at the feet of the same great master within a short time one of another, and we both retain for that great master a deep sense of gratitude. We joined the Society very nearly contemporaneously, and we are both very grateful to this Society for instruction and happiness. Instruction and happiness are correlated variables but they are not synonyms, and I should say that perhaps the debt we both feel most is for the friendships that have sprung up through the meetings of the Society.

The President is paying that debt—I shall die an undischarged bankrupt—and this evening he has paid a large instalment. It is very easy to prepare a quotable Presidential Address. If the President of the Royal Statistical Society were to announce an address on the growing menace of communism or on the increasing danger of fascism, using, of course, exactly the same statistical data for either, we should have had two rows of reporters here and sentences from that address would have been printed in different newspapers. He has devoted his address to ourselves, and not a single reporter from Fleet Street has thought it necessary to interrupt his tea. The reporter was wise in his generation; we do not interest, we are not news, and yet, as Lord Woolton has pointed out indirectly, the services that we render to those members of the public who are wise enough to take advantage of them are very great, and it is after careful examination of our position —and the only person who can make that examination is a person with intimate knowledge of the Society and affection for it—that we can adopt measures to enable us hopefully to face the future. Therefore I think we owe a very special vote of thanks to our President. He could have so easily made this a show occasion. We do not want a show occasion, we want to build for the future.

I beg to second the vote of thanks.

CC-0. In Public Domain. Gurukul Kangri Collection, Haridwar

Digitized by Arya Samaj Foundation Chennai and eGangotri



As a result of the ballot taken during the meeting, the candidates named below were elected Fellows of the Society:

Basil George Abrahams.
John Woodwall Acton.
Vanessa Adele Allinson.
Charles Dorrien Anderson.
Ivor William Maughan Atkinson.
Edwina Jean Baker.
Harold Firth Bamford.
John Darcy Barker.
Michael Richard Barton.
Osborne Berkeley-Jones.
Lawrence Sam Berman.
Emma Blau.
Philip Benjamin Blow.
Horace Bond.
Geoffrey Frederick Brown.
Violet Rosina Cane.
David Albert Caplin.
Theodore Cauter.
Enid Charles.
George Colin Chivers.
Squire Clayton.
Vera Lucille Croskill.
Philip Allen Daniell.
Jack William Henry Dean.
Peter John Major Dodd.
Joyce Drummond.
Lawrence Farrington.
Alexander Ferguson.
Arthur James Grenfeld.
Arthur Bertram Griffith-Colpoys.
Cecil Griffiths.
Hugo Christian Hamaker.
Cyril Monckton Handley.
Alastair Kydd Hanton.
Harry Rose Hart.
Howard James Louis Herne.
Arthur Leslie Hughes.
Nagamuttu Manicka Idaikkadar.
Rita Olivine Innerarity.
P. V. K. Iyer.
Roy Jamieson.
Charles Henry Ranger Jarvis.
Peter Henry Karmel.
Joan Mary Kinsella.
Kenneth Lewis Kinsman.
Graham Frederick Komlosy.
Max Lacroix.
Selma Elizabeth Leyshon.
Ivo Joseph Lockyer.
Charles Edward Macbeth.
Donald MacIntyre.
Ian Auld MacTaggart.
Stanley Howard Marsh.
Charles Montacute.
Enrico de Montagu.
Arthur Stanley Nathan.
Frank Donald Neech.
Ronald Frank Newby.
Monroe L. Norden.
Peter David Oldham.
William Theophilus Palmer.
Barbara Annette Pickersgill.
John William Thomas Pritchard.
Peter Edwin Purdon.
Philip Redfern.
Dennis Leslie Richards.
David John Michael Rowe.
Harold Ruben.
Gajraj Bahadur Saksena.
David Martin Sandelius.
Edgar Lewis Shell.
Harold Dunage Smith.
Philip John Stanley.
John Stewart.
Archibald Stirling.
Reginald Owen Street.
A. V. Sukhatme.
Jean Marian Susan Thom.
William Charles Thorn.
W. E. Thornton-Bryar.
Ronald James Arthur Unwin.
John Wadsworth.
Huntley Gordon Walker.
Stephen Whiting.
Robert Horlick Williams.
Richard Owen Williams.
Renée Eugénie Wolf.
Edward Gordon Wright.
George Frederick Mortimer Young.

*Corporate Representatives*

G. H. Austin, *representing* Leeds College of Commerce.
Rosemary Burke, *representing* Research Services, Ltd.
John Graham Ferraby, *representing* The British Export Trade Research Organization.
Alexander Warnock Filson, *representing* The Fabian Society.
Raymond John Goodman, *representing* P.E.P. (Political and Economic Planning) Trust.
Charles George Athelstan Hall, *representing* Philips Electrical, Ltd.
Sir Peter Innes, *representing* The National Foundation for Educational Research.
Mrs. Pauline Silver, *representing* The Council of Industrial Design.
David Robertson Wilson, *representing* The International Wool Secretariat.

CC-0. In Public Domain. Gurukul Kangri Collection, Haridwar

Digitized by Arya Samaj Foundation Chennai and eGangotri



PROCEEDINGS OF A SPECIAL GENERAL MEETING OF THE ROYAL STATISTICAL SOCIETY, HELD AT THE LONDON SCHOOL OF HYGIENE AND TROPICAL MEDICINE ON THURSDAY, 20TH NOVEMBER, 1947, IMMEDIATELY ON CONCLUSION OF THE ORDINARY MEETING CONVENED FOR THE SAME DATE

The Chair was taken by the PRESIDENT, Dr. DAVID HERON.

The PRESIDENT moved:

"That the Bye-laws of the Society be amended as follows:

"(1) By deleting the words 'of two guineas' from lines 9 and 10 of Bye-law 5.

"(2) By inserting after Bye-law 5 the following Bye-law:

"5(*a*) The annual subscription and the composition fees which are provided for by Bye-law 5 shall as from 21st November, 1947, be increased by fifty per centum, except in the cases of Fellows who shall have attained the age of sixty years or paid at least twenty-five annual subscriptions."

In moving this resolution the President said he had spoken at length on the matter in his Address, and every Fellow had received what was in fact a summary of the arguments for this increase in the fees.

The HONORARY TREASURER, Professor J. H. Jones, seconded the motion.

Mr. FRIDAY moved an amendment to the proposed Bye-law 5 (*a*) "to delete all words after 'who' in the fourth line and insert 'have not yet attained the age of 30 years'." He appreciated the necessity for the increase in the subscription, but disagreed with the principle that because the older Fellows could not benefit from the future activities of the Society they should therefore pay less. He felt that the rate should be fixed in relation to the cost of providing current benefits, and in regard to the number of persons paying the fees. The question of the Society's examinations was also involved. It was the younger people who would wish to take these and entry to the Society should be made as easy as possible for them, both for this purpose, and because the success of a Society depended upon an influx of young people.

Mr. COHEN seconded the motion for the amendment.

Professor BRADFORD HILL opposed the motion for the amendment. He pointed out that under the old bye-laws preferential treatment in respect of life composition fees had always been given to the older Fellows, so that the proposed new bye-law included an extension of an already accepted principle. For the younger statistician the Society did a great deal, for there were the Study Section, the Research Section and the Industrial Applications Section, each of which non-Fellows could join on payment of 10*s.* per annum. Members of the Sections could attend the meetings, use the Society's library and reading rooms, and could purchase the Supplement to the *Journal* at a reduced rate. The Society had powers to examine only its own Fellows, and he thought it undesirable to give a differential rate to young persons to enable them to enter a learned Society for the purpose merely of sitting an examination.

Colonel BUTLER opposed the motion for the amendment. Speaking as one of the oldest of the active Fellows, he said that when he became superannuated some fifteen years ago and was considering resigning from various societies, he found that in quite a number the subscription automatically fell with the attainment of his years and with the fact of superannuation. The Council in proposing this new bye-law was, therefore, following the practice of other societies.

Mr. THAYRE opposed the motion for the amendment. He said he joined the Society when he was under thirty, and would still have done so if the subscription had been higher, as it was a privilege to belong to the Society. To give preferential treatment to people under thirty would, he thought, encourage them to join the Society in order to take the examinations, qualify, and then resign at the age of thirty, having thus been subsidized by the Society. He felt this was a greater danger than losing Fellows through an increase in the subscription.

Mr. EASTERFIELD asked if an increase in the fees of 50 per cent. were sufficient.

The PRESIDENT replied that it was hoped this would be sufficient for present purposes. The Society would not be debarred from making a further increase later if it was felt desirable.

Mr. MASON asked if members of Sections who were not Fellows of the Society might be allowed

CC-0. In Public Domain. Gurukul Kangri Collection, Haridwar

Digitized by Arya Samaj Foundation Chennai and eGangotri



to borrow books from the Library. He thought that this concession would help people with modest means. He also suggested that some of the mechanical machine companies might be willing, if approached by the Society, to provide mechanical aids in the Library.

The PRESIDENT said that these questions would be considered by the Council.

The motion for the amendment was put to the meeting and defeated.

Mr. SPRAY thought that the wording of the Resolution was slightly ambiguous.

The PRESIDENT replied that the Society's solicitors advised that the present phrasing showed clearly the meaning to be attached to the proposal. He did not think it wise to alter the resolution, on which legal advice had been taken. An explanatory footnote could, however, be inserted subsequently.

The Resolution was put to the meeting, and declared carried by the necessary majority.

The Proceedings then terminated.

CC-0. In Public Domain. Gurukul Kangri Collection, Haridwar

Digitized by Arya Samaj Foundation Chennai and eGangotri



# The Collection of Morbidity Data from Hospitals

By H. Cotton

(Nuffield Bureau of Health and Sickness Records, Oxford)

[Read before the Royal Statistical Society, 16th December, 1947, the President, Dr. D. Heron, in the Chair]

There is a well-known saying of Lord Kelvin that "When you can measure what you are speaking about and express it in numbers, you know something about it, but when you cannot measure it, when you cannot express it in numbers, your knowledge is of a meagre and unsatisfactory kind." Those who were interested in mortality in the seventeenth, eighteenth and early nineteenth centuries were in the unsatisfactory situation which Kelvin had in mind; they could not measure what they were speaking about. The means of measurement were provided outstandingly by William Farr, who "found medical statistics in such a state that only men of genius like Graunt could use them at all without reaching false conclusions, and when he [Farr] retired from the public service, left them so organized and arranged that any reasonably intelligent man could draw accurate conclusions from them"(1).

On the foundations laid by Farr many men have built. It is unnecessary—indeed, it would be inappropriate—for me to attempt to trace the development of mortality statistics down to the present day. I hope, however, that I may take this opportunity of referring to the work of the present Medical Statistician of the General Register Office, Dr. Percy Stocks, upon whose studies in mortality statistics so much reliance is placed by all whose work requires them to venture into this field. An immense amount of information, remarkably detailed when one realizes the small number of facts which are recorded on death certificates, has been and still is extracted by Dr. Stocks year after year, and the tables he produces have formed the basis of published works by many people—and perhaps one or two reputations.

Mortality statistics, however, greatly as they have grown in accuracy and in range of detail in the past century, do not and, by definition, cannot remain the only source of knowledge concerning the prevalence of disease in the community. They are the most selective of all medical statistics in the sense that they relate only to illnesses and injuries which have a fatal issue, and these are but a tiny proportion (perhaps not one-half of one per cent.) of the gross total of separate illnesses and injuries suffered by the population as a whole during a single calendar year. Moreover, the prevalence of fatal illness or injury among the older members of the population is relatively much greater than it is among the young and the middle-aged: the risk of a fatal issue must increase (for many diseases) with advancing years. Mortality statistics, therefore, are "overloaded" in the upper age-brackets. They are probably overloaded in the lowest age-brackets; also, since the newborn have at least one thing in common with the aged, namely, both are separated by many years from their prime of life. In particular (if a single point of detail may be raised here), mortality statistics bearing upon the occupational distribution of disease are subject to a special disability. Many old people—I do not know how many—at the time of death are following occupations quite different from their main employment during adulthood. The policeman turns publican, the soldier becomes a commissionaire, the factory worker saves to buy a little "mixed" shop. Since occupational mortality statistics have to be based on the occupation at time of death, error (unavoidable but undeniable) creeps in.

In the world of to-day with its man-power problems, which include absenteeism, "spivs," "drones," "eels," "butterflies," and other subtractions from potential output, it is clear that illness and injury, the chief casualty agents, must receive as much, if not more, attention than death itself. An industrial worker, when he is sick, is out of circulation just as effectively as if he were dead.

CC-0. In Public Domain. Gurukul Kangri Collection, Haridwar

Digitized by Arya Samaj Foundation Chennai and eGangotri



Stocks has explained that, until recently, it has not been possible to obtain any measure of the amount of non-fatal illness in the population as a whole, except with regard to notifiable diseases, which comprise no more than 1 in 500 of all illnesses among adults(2). "The rise and fall of the prevalence of illness and its variation according to sex, age, occupation, size of family, kind of housing, and as between town and country, could only be judged from the Registrar-General's statistics of death." He has also pointed out that to collect together all the records of people treated at hospitals and by doctors would be an enormous undertaking, expensive both in time and labour, and that, even if they could be assembled, such records would leave out of account all the minor illness for which medical advice had not been sought.

What can be done about the last mentioned type of illness I do not know, but that something can be done about the rest is evident. The arguable point is whether the results would justify the effort. Two great national plans are about to be put into operation in this country which will afford opportunity for the study of an important fraction of the total records of medically-attended illness. Next July the hospital services of the country will be integrated under the National Health Services Act, and the health insurance provision of the country will be co-ordinated under the National Insurance Act.

With regard to the hospitals, there is a definite possibility that records (not all of them good records) on some 5,000,000 in-patients annually will be available for study—not without some trouble, it is true. As to the insurance scheme, it has been estimated that 1,000,000 (3) claims a week for sickness benefit by persons over 15 years old may arise; clearly, though the task may seem stupendous, the possibility exists that the diagnoses and durations of sickness in all these cases can be studied in relation to demographic and other factors.

Sickness not attended by doctors, and sickness attended by doctors outside the provisions of these two Acts will remain, if not unrecorded, at any rate inaccessible to the student, but it is difficult to believe that the broad conclusions deducible from the hospital and insurance records will be vitiated to any appreciable degree on this account. In any event, these records give us the prospect of a more realistic tabulation of illnesses by age-groups and occupations than mortality statistics can provide.

Since big numbers are preferable to small numbers in statistical tabulations, the volume of the difference between mortality statistics and morbidity statistics may be stated. There are some 500,000 deaths per annum in this country. The numbers of hospital in-patients and insured sicknesses have been given above: 5,000,000 and 50,000,000 respectively. Hospital out-patient departments also come into contact with millions of sick persons. Although reliable estimates are difficult, it may be asserted with some confidence that there are not less than three out-patients to one in-patient, giving, therefore, another 15,000,000 records to be studied. Surely a total of 70,000,000 records per annum (even if some of them refer to the same "events") will provide data enough for the most voracious vital statistician!

To illustrate the difference in the numbers of fatal and non-fatal illnesses, the subjoined table shows the number of deaths in 1945 from four notifiable diseases, compared with the number of cases which occurred.

TABLE I

1945

| | Number of cases | | | |
|---|---|---|---|---|
| | Male | Female | Total | Number of deaths |
| Measles | 223,719 | 221,693 | 445,412 | 728 |
| Whooping-cough | 29,624 | 33,039 | 62,663 | 689 |
| Scarlet fever | 32,680 | 39,494 | 72,174 | 82 |
| Diphtheria | 7,587 | 9,993 | 17,582 | 694 |

Table I is not offered as a specific instance of new records which will be available next year: there is a notification scheme for the diseases mentioned. Simply, one wonders what the comparative figures are for non-notifiable diseases, such as, for example, appendicitis.

In New Zealand in 1942 there were 68 deaths from appendicitis. The total number of appendicitis patients "dismissed," *i.e.* discharged from or dying in New Zealand public hospitals in the

CC-0. In Public Domain. Gurukul Kangri Collection, Haridwar

Digitized by Arya Samaj Foundation Chennai and eGangotri



same year was 5,816 (4). Since every development of medical and surgical science may be expected to reflect itself in a diminished death-rate, it is obviously possible to be misled by mortality statistics, and particularly by comparison of modern figures with those of 50 or 100 years ago. Information on morbidity, if available, would be a useful corrective. For example, during the period 1861–65 the death-rate from scarlet fever per million persons aged under 15 years was 2,307. For the period 1938–42 the rate was 15. The disease itself has undergone a change, in the sense that its effect on the sufferer is much less severe than it was 80 years ago. But the diminution in the death-rate is not matched by the diminution in the incidence. In how many other diseases is this the case?

Sometimes the pendulum swings the other way. When Sir Frederick Treves operated upon King Edward VII for appendicitis, he started a rage which has since subsided. A comparison of the incidence of the diagnosis "appendicitis" to-day and 40 years ago would be instructive, though perhaps unwelcome to the more senior surgeons.

It is not my desire or intention to suggest that nothing has been done to study morbidity. The fact that it has not been studied on the grand scale must not be allowed to obscure the work which has been actually done. Many illustrious vital statisticians have spent their lives studying communicable (and therefore notifiable) disease. A list of their names would be supererogatory. Studies of specific non-communicable diseases have yielded much valuable knowledge. In 1937 Bradford Hill investigated the sickness experience of London Transport workers, with special reference to digestive disturbances(5). He extracted from original records details of more than a million-and-a-quarter days of sickness, and analysed them with regard to such factors as diagnosis, age of patient, and occupation. The object of his investigation was to see whether omnibus workers had, as had been suggested by Trade Union representatives, an abnormal sickness experience from diseases attributed to gastric causes.

The Industrial Health Research Board report on "The Effect of Artificial Humidification upon the Sickness Rates of Cotton Weaving Operatives" (6) may also be mentioned, and the reports published on Scottish health insurance records(7).

There have been numerous papers on specific diseases which have rested, of necessity, on relatively small numbers of cases—all that were colligible by the investigators concerned. Many investigations are currently proceeding, among them a Medical Research Council inquiry into peptic ulcer and a Ministry of Health-supported survey of poliomyelitis. I mention these only because I am concerned with them in a small way; I have not enough knowledge of what is happening to give a catalogue of current studies.

The Social Survey of the Central Office of Information has made available its Survey of Sickness for October, 1943, to December, 1945 (1), described by the Chief Medical Officer of the Ministry of Health as "basic information of great value in adjusting our health services to the needs of the community and in assaying the progress of our work." Data resulting from inquiries of the Social Survey are now regularly included in the Quarterly Returns of the Registrar-General. These surveys are conducted on random samples of the population distributed over the whole country, and rest upon information furnished by members of the public; they are, therefore, to be distinguished from surveys in which the basic data are authenticated medical observations. Nevertheless, the Social Survey's Health Index is at the present time the only endeavour to collect on a national scale information on the incidence of illness among the general population, and must be mentioned.

In 1943, with the assistance of the Nuffield Provincial Hospitals Trust, a small project was launched in Oxford, some mention of which I hope will be of interest. A sub-committee presided over by the late Sir E. Farquhar Buzzard and with Dr. A. H. T. Robb-Smith, Secretary of the Medical Research Council's Committee on Hospital Morbidity Statistics, as its secretary, brought to partial fruition a plan for recording sickness in the three counties of Berkshire, Buckinghamshire and Oxfordshire. It was hoped to keep these records for a period of 3 calendar years.

The full project proved impracticable, partly because the war was still on, partly because of difficulties in securing access to records, and partly for financial reasons. It was eventually decided that the available funds should be devoted to a study of hospital records in the area of the Oxford and District Joint Hospitals Board, an area with a population of approximately 285,000 persons. The Bureau of Health and Sickness Records, which was established to do the work, was located in the Institute of Social Medicine at Oxford under Professor J. A. Ryle, and it

CC-0. In Public Domain. Gurukul Kangri Collection, Haridwar

Digitized by Arya Samaj Foundation Chennai and eGangotri



was understood that such time as was available after allowing for the main study should be devoted to smaller projects initiated or accepted by the Institute.

The Bureau has collected hospital records in the area mentioned since January 1, 1945, and the 3-year period will therefore end on December 31 of this year. The information collected will be studied by Professor Ryle, Dr. W. T. Russell and myself as soon as is practicable in 1948, and you will forgive me if I do not hazard any guesses as to the contents of the report we shall prepare.

The Bureau has developed in many directions during the time it has been working, and we have had the pleasure of assisting many investigators interested in specific problems. With these, however, we are not here concerned.

The collection of hospital records is not in itself an innovation. Such records have been collected and tabulated in the U.S.A., in Canada, in New Zealand, and in this country. The London County Council has for many years past maintained a statistical branch which prepares large numbers of tabulations annually and has made many special investigations. The city of Glasgow has likewise for years tabulated details of its hospital cases, as also has the city of Manchester. The Nuffield Bureau at Glasgow (like the Oxford Bureau) is currently engaged on an "inclusive" tabulation; the area is the county of Stirlingshire. No figures are yet available. The tabulation of hospital records in Great Britain, however, has not anywhere been an "inclusive" tabulation—that is to say, only the hospitals of the local authority have been involved—and since no figures which do not include the work of the voluntary hospitals can give a true picture of hospitalization in a given area, the British schemes have not been able to gain much notice.

In the Oxford area voluntary and municipal hospitals alike contribute data. It must be mentioned at once that there are certain exclusions. The infectious diseases hospitals, for example, are not included in the scheme, since the broad picture of their work can be obtained from the annual reports of the medical officers of health. The mental hospitals are excluded because their picture is obtainable from the Board of Control. The Oxford Eye Hospital, originally included, had to be excluded after a short time because the hospital's notes defied transcription. Altogether 22 hospitals, ranging in size from 20 beds to 600, contribute to the Bureau's tabulations.

In the first year (1945) machine-punched cards were made for nearly 17,000 hospital in-patients dismissed during the year. They represented a total of approximately 470,000 bed-days. Tabulation of these cards in various ways produced some matters of interest, but I do not propose to give many examples, since the tabulations which are to be prepared on the work of the full three years will, it is hoped, be more valuable.

However, it is not without interest to look at the following table, which refers to 1,038 cases of gastric disorder dismissed from the local hospitals during 1945.

TABLE II (8)

*Cases of Gastric Disorder Dismissed from Hospitals in Oxford Area during* 1945

| | Males | % | Females | % | Sex-ratio M./F. |
|---|---|---|---|---|---|
| Gastric ulcer . . . . . | 22 | 3·6 | 9 | 2·1 | 2·4 |
| Duodenal ulcer . . . . | 52 | 8·5 | 5 | 1·2 | 10·4 |
| Other gastric disorders . . . | 535 | 87·9 | 415 | 96·7 | 1·3 |
| Total . . . . . | 609 | 100·0 | 429 | 100·0 | 1·4 |

The above table shows that for every 10 diagnoses of gastric disorder in women there were 14 in men. Breaking down "gastric disorder" into gastric ulcer, duodenal ulcer and "other gastric disorders," the proportions change. For every woman diagnosed as duodenal ulcer there were 10·4 men; for gastric ulcer there were 2·4 men to every woman; every 12th man in the whole group had a duodenal ulcer, but only every 85th woman. The absolute numbers are small, and solid inferences cannot be drawn from them. What is the national experience? How do regions compare in the matter of the ulcer sex-ratio? What is the occupational distribution of gastric disorder?



CC-0. In Public Domain. Gurukul Kangri Collection, Haridwar

Digitized by Arya Samaj Foundation Chennai and eGangotri



This instance is one of many where the local figures, inconsiderable perhaps in themselves, provoke thought.

Outstanding questions upon which data are required are the tumour incidence rate, the rheumatic heart disease rate, and certain finer points, such as symptom-frequency in particular diseases, responses to general and specific chemotherapy, operation end-results, anaesthetic reactions, and the like, could be investigated more satisfactorily if large numbers of hospital records were available for study. The distribution of hospitalized illness among the various age-groups is, as already mentioned, a matter of importance. The age-structure of the population is highly relevant to the type of hospital service required; this is a planning point. The following tables show the hospitalization rates (subject to the important exclusions of infectious disease, mental disease and the Oxford Eye Hospital cases already emphasized) for children of 3 age-groups in the Oxford area in 1945:

TABLE III

*Hospitalization of Children in Oxford and District Hospitals*, 1945 (*Subject to Exclusions mentioned above*)

| Age group | Number of children hospitalized | Hospitalization rate per 1,000 children |
|---|---|---|
| 0–5 | 888 | 38.4 |
| 5–10 | 720 | 34·9 |
| 10–15 | 590 | 29.3 |
| All children | 2,198 | 34·4 |

The days of hospital care of the children hospitalized appear below:

TABLE IV

| Age group | Aggregate days of hospital care | Days of hospital care per 100 of child-population per annum |
|---|---|---|
| 0–5 | 16,899 | 73·1 |
| 5–10 | 16,722 | 81·2 |
| 10–15 | 12,454 | 61·8 |
| All children | 46,075 | 72·1 |

The average duration of stay in hospital for the 2,198 children was 21 days, and this, related to the overall hospitalization rate of 34·4 per 1,000 children, would indicate that approximately 2 beds per 1,000 of the child-population of the area were occupied throughout the year, with additional beds for infectious disease, mental disease and eye conditions. The user figure of 2 beds per 1,000 child-population plus these additions, however, cannot provide an index of bed requirements, unless it can be shown that existing beds, at this rate of user, are not fully occupied. If they are fully occupied, the possibility exists that other children who require beds cannot get them.

Medical-administrative problems to the solution of which hospital statistics can contribute are numerous. In an analysis of 576,623 patients discharged from New York hospitals in 1933 (the results of which were, unfortunately, not published for nearly 10 years), a question was raised which, if it could be answered, would be highly relevant in Britain to-day: "To what extent do factors other than diagnosis influence length of hospital stay—that is, what reasons may cause patients with the same diagnosis to require hospital treatment of different duration?" (9). There is an obvious relation between age of patient and length of stay, and there is also a finance relation. A table published in the New York study showed that "pay" patients (full or part pay) had a shorter overall average stay than "non-pay" patients. "Pay" patients stayed an average of 11 days each, "free" patients 16 days each, and "public charge" patients 21 days each. (In considering these figures, allowance should be made for the age structure of the patients concerned, and the chronicity of illness, since long-term illness in old people probably affects the "public charge"

CC-0. In Public Domain. Gurukul Kangri Collection, Haridwar

Digitized by Arya Samaj Foundation Chennai and eGangotri



figure.) A survey of 60,743 Ontario patients in 1936 revealed that patients paid for by government and municipal authorities stayed longer than "paying" and "private" patients. According to the report (10), "average durations of care by sex, age, and diagnosis show uniformly that the duration of hospital care among those whose maintenance is paid for by the State is consistently and substantially higher than for patients who contribute to the cost of their maintenance." What is the British experience? The records which could have furnished it have not been kept. The Oxford area experience for 1946 is given in Table V.

TABLE V (8)

*Oxford Area Patients Dismissed in* 1946: *Selected Diagnosis Groups by Pay-status and Average Days' Care.**

| Group | Circulatory disorders | | Respiratory disorders | | Digestion disorders | | Injuries | |
|---|---|---|---|---|---|---|---|---|
| | Number of patients | Average stay (days) | Number of patients | Average stay (days) | Number of patients | Average stay (days) | Number of patients | Average stay (days) |
| Pay† | 433 | 61·1 | 705 | 16·4 | 2 762 | 10·2 | 1,202 | 17·6 |
| Non-pay | 42 | 24·0 | 87 | 22·0 | 236 | 12·8 | 509 | 21·4 |
| Pay status unknown | 52 | 20·4 | 91 | 14·8 | 454 | 8·0 | 385 | 11·2 |
| Total | 527 | 54·0 | 883 | 16·4 | 3,452 | 10·1 | 2 096 | 17·6 |

* 10 patients, each with over 1,000 days' care, are excluded.
† Includes private, full pay, part pay, and contributory-scheme patients.

Because of the numerous patients in the "Pay-status Unknown" category, it is not possible to say whether non-paying patients in the Oxford area stayed consistently longer than paying patients, but in three of the four groups of disorders they appeared to stay a little longer. (The high average stay of paying patients with circulatory disorders was caused by a small number of chronics in local authority hospitals.)

The Oxford Bureau proposes, in 1948, to undertake a one-year study of hospitalized injuries in its area. The investigation will try to trace the aetiology of injuries, especially road accidents and falls. Time of occurrence, time-lag between accident and arrival at hospital, type of injury, place of injury, nature (*e.g.* wound, fracture, burn, etc.), and the part of the body injured will be recorded in all cases. For road accidents there will be classification according to the "status" of the injured person (*e.g.* pedestrian, cyclist, motorist, etc.), location of accident (*e.g.* built-up area or not), day of occurrence, atmospheric conditions, and state of road. For home accidents note will be taken of mechanical factors involved, personal factors and causative agents. Falls will be listed according to type, with a subdivision for falls from ladders. Railway, aircraft and watercraft accidents will also be accounted for, but this will be done simply to complete the totals so that no hospitalized injuries are left unaccounted for. Now that the famous "Black Widow" poster has been removed from the hoardings, there may be room for an imaginative picture showing an earnest son dissuading his aged mother from cleaning the upstairs windows. The caption, perhaps, instead of "Keep Death off the Road," will be "Stop Mother Climbing That Ladder." Table VI illustrates the point.

Regional Hospital Boards can be expected to manifest some interest in tabulations of duration of stay. It is dangerous to look at them, however, without knowledge of the diagnostic picture.

TABLE VI (8)

*Oxford Area: Percentage of Fracture Cases by Ages Dismissed from Hospital,* 1946.

| | Males | | | | | Females | | | | |
|---|---|---|---|---|---|---|---|---|---|---|
| | All ages | 55–65 | 65–70 | 70–75 | 75+ | All ages | 55–65 | 65–70 | 70–75 | 75+ |
| A | 25·7 | 12·0 | 33·3 | 11·1 | 21·4 | 14·2 | 10·0 | 5·9 | 2·9 | 9·6 |
| B | 24·8 | 38·0 | 44·5 | 33·3 | 50·0 | 61·7 | 64·0 | 94·1 | 77·1 | 80·8 |
| C | 49·5 | 50·0 | 22·2 | 55·6 | 28·6 | 24·1 | 26·0 | 0·0 | 20·0 | 9·6 |
| Total | 100·0 | 100·0 | 100·0 | 100·0 | 100·0 | 100·0 | 100·0 | 100·0 | 100·0 | 100·0 |

A = motor-vehicle accidents; B = falls, etc.; C = other injuries.

CC-0. In Public Domain. Gurukul Kangri Collection, Haridwar

Digitized by Arya Samaj Foundation Chennai and eGangotri



In 1945 in the Oxford area, for instance, the average duration of stay of patients dismissed from the teaching hospital (the Radcliffe Infirmary) was 16·1 days. In the Horton General Hospital (serving the town of Banbury) the average stay was 25·5 days. The Horton is a voluntary hospital. At the Cowley Road Municipal Hospital in Oxford the average stay was 56·5 days. Cowley Road is one of the places to which long-stay cases gravitate, presumably under economic necessity. Another voluntary hospital, the Wingfield-Morris Orthopaedic Hospital, has an average stay of 51·9 days, this duration being attributable to the specialized type of work which the hospital undertakes. The average stay of all tabulated patients throughout the area in 1945 was 28·2 days. What is it in other areas? The new Boards will wish to know, and should be told, but they should beware of figures supplied without diagnostic breakdowns.

Table VII illustrates some differences in duration of stay for three broad diagnostic categories in three voluntary hospitals of different sizes.

TABLE VII

*Duration of Stay in 3 Selected Hospitals (Selected Diagnostic Groups)* 1945

| | Diseases of respiratory system | | Diseases of digestive system | | Diseases of skin and cellular tissue. | |
|---|---|---|---|---|---|---|
| | Patients | Av. days' stay | Patients | Av. days' stay | Patients. | |
| A (large) | 339 | 16·9 | 1,401 | 15·4 | 235 | 14·8 |
| B (medium) | 172 | 22·6 | 748 | 28·2 | 182 | 18·9 |
| C (small) | 22 | 15·2 | 144 | 8·0 | 11 | 11·3 |

The stay of "Digestive System" cases in Hospital C is outstandingly short. Does Hospital C accord less good treatment to this group than Hospitals A and B? It may or may not, but the explanation of the 8 days' average stay is simpler than this. Hospital C had a much larger proportion of tonsils and adenoids cases in children (which are classified under "Digestive System") than had the other hospitals.

It will be argued that hospital records cannot in themselves contribute much to our knowledge of the incidence and distribution of sickness in the community. Hospitals select their cases to some extent, and certainly there is automatic selection in at least two ways, *i.e.* patients "select themselves" for hospital treatment by the severity of their illness, or, in the case of long-term illness not necessarily severe, they "select themselves" by the operation of domestic (economic) stress. These "automatic selection factors" are themselves variable; for example, one result of certain modern forms of chemotherapy is that diseases which once were considered suitable for treatment in hospital are not now so regarded. It may be different to-morrow: a new drug may require to be administered in hospital, although before its advent, patients suffering from the disease at which the drug is aimed may have been treated at home. There is also the ever-increasing demand for beds for obstetric cases, with, it may be, some exclusion of other patients. "Hospital records," says McKinlay, "can at best provide information only on intercurrent morbidity, and we must not overestimate their capacity even in this respect" (11).

Admitting all this, the fact remains that the practical usefulness of hospital discharge records is considerable. They represent at worst a compromise between mortality statistics and health insurance statistics. They can at least throw useful light on the distribution of hospitalized disease among the various age-groups and occupational groups. Since they relate to patients who have gained admission to hospital, they do not directly indicate the potential demand for hospitalization, but they have a value in this respect also; they will indicate hospitals which are not fully used, they will provide a reasonable index to the relative pressure on hospital departments, and they can be extremely useful in relating achievement to cost.

Against McKinlay's point made above, I would say this: For the preparation (planning) of proper hospital facilities, the occurrence of given diseases per 1,000 population of a given age-group must be found, and the annual analysis of hospital dismissals goes far to meet this requirement, even though some unknown fraction of those suffering from a given disease does not, for various reasons, enter hospital. But further, in addition to knowledge of the occurrence of disease, knowledge of the requirements of proper treatment is needed. The demand for hospital beds may be affected by the discovery of new therapeutic measures; for instance the substitution

CC-0. In Public Domain. Gurukul Kangri Collection, Haridwar

Digitized by Arya Samaj Foundation Chennai and eGangotri

110646



of radium therapy for surgery in the treatment of certain neoplasms has reduced the amount of in-patient care required by the sufferers. The development of homes or hostels for the chronically ill and infirm may also be expected to free hospital beds for other patients. As and when extra-institutional services are further developed, *e.g.* home-nursing services, the demand for hospital beds may fall, even though the frequency of the occurrence of disease rises. The opposite situation may occur, *i.e.* the increasing reference to hospital of conditions formerly dealt with at home (as in the case of obstetrics) may create pressure where none existed before.

Whatever the shortcomings of hospital statistics in the field of public health, it would seem beyond doubt that, domestically speaking, within the new regionalized hospital service they will be indispensable unless action is eternally to trail in the rear of every change in circumstances.

As the authors of the New York *Hospital Discharge Study* remark, " . . . as to the extent of the contribution that hospital data can make to vital statistics, it would seem that the burden of proof has shifted to those who deny that these data have such possibilities" (12).

The Dominion of New Zealand recognizes the value of hospital reports, since its *Annual Report on the Vital Statistics of the Dominion* contains returns of hospital dismissals, diagnostically classified. The Department of Health for Ontario, Canada, published in 1939 and 1940 a 4-volume report on *A Survey of the Public General Hospitals in the Province*, the fourth part of which is devoted to a study of hospital morbidity (13). This analysis of the data of more than 60,000 patients discharged from hospital during a period of 3 months in 1936 produced a comprehensive set of tabulations and charts well worthy of study. At home, Stocks, during the recent war, classified (on a sample basis) the patients treated in the hospitals of the Emergency Medical Service.

As to practicability, the American, Canadian, New Zealand and English experiments show that this is beyond question.

The technique of collecting the required data from hospital records is not very complex. Since clinical records themselves cannot, for obvious reasons, be removed from the hospitals for studies which may occupy months or years, the required data must be transcribed from the original documents into an *ad hoc* schedule or report-form, or, as we call it in Oxford, a transcription. The transcriptions themselves may then be classified, counted and tabulated, or they may be used as transition documents for the preparation of punched cards for mechanical sorting and tabulating. The principal difficulties which arise are as follows:

(1) Imperfection of the original hospital records.
(2) Inconsistency of hospital practice in the matter of nomenclature.
(3) Lack of a uniformly-accepted classification system.

With regard to the first point (the quality of hospital records), there is no doubt that it is a serious difficulty. An opportunity is about to present itself for the Government to require all hospitals to maintain efficient recording systems. Guidance to hospitals on methods of record-keeping would, I am certain, be welcomed by the great majority, for many hospitals are dissatisfied with the amorphous masses of paper which they have accumulated over a long period of years.

A suggestion, coming from authoritative quarters, that all hospitals should for record purposes regard the patient as the unit of treatment; should keep all the papers on one patient (irrespective of the type of service rendered or the intervals in time at which services are rendered) in one folder; and should make, at the end of each term of treatment, a summary of the case under a few main headings, would not, I am convinced, lead to a revolt. Careful analysis of the available techniques of record-keeping and summarizing, by experienced investigators, would, I feel, produce basic methods broadly acceptable to all.

The second difficulty, that of nomenclature, is also serious. Such hospitals as at present indulge in diagnostic classification follow diverse lines. Among the nomenclatures I know to be in use are: The American Medical Association's Standard Nomenclature of Disease and Operations, the Royal College of Physicians' Nomenclature, the Medical Research Council's Provisional Classification of Diseases and Injuries for Use in Compiling Morbidity Statistics, and various "home-made" classifications, the compilers of which have drawn freely upon lists prepared at various times for use in the Armed Forces. An appreciable number of hospitals have devised classifications with the aid of the International List of Causes of Death, to which have been superadded the products of the inventiveness of members of their staffs. Where researchers in hospitals have investigated selected groups of patients, the diagnostic data has been tabulated in the way and under the headings believed by the researchers to be most useful to their immediate purposes.

R 519.905 J82J

CC-0. In Public Domain. Gurukul Kangri Collection, Haridwar

Digitized by Arya Samaj Foundation Chennai and eGangotri



Perhaps the patients whose deaths have occurred in hospital are the only ones whose final diagnoses have had any measure of conformity as between hospital and hospital, since the rules for the certification of death have to be applied.

Classification troubles begin with the question of the relative importance of plural diagnoses. First of all, it may be said at once that the diagnosis to be recorded on the "transcription" for statistical purposes should be the discharge diagnosis; admission diagnoses and provisional diagnoses are too frequently amended before the discharge of the patient. Multiple final diagnoses present the next difficulty. For our purposes, one diagnosis must appear as the main tabulable diagnosis just as, in mortality recording, a principal cause of death is required, but the other diagnoses, whether they be termed "additional" or "secondary," cannot be ignored. Students of records are, I think, agreed that the main diagnosis should be the hospital's final judgment as to the condition for which the patient was admitted and treated. The physician may not agree: a patient may be admitted for a condition which is, in fact, less serious (in the sense of being less dangerous to his life) than some other condition which is discovered during his hospital stay, *e.g.* a road accident fracture case may be found to be suffering from a malignant tumour. His arrival at the hospital is due to the injury, and the injury is therefore the main diagnosis. The malignancy must not be ignored, but it is an additional condition, and not, for statistical recording purposes, the main condition.

It will be appreciated that if such major long-term complaints as cancer and tuberculosis were always given priority over less serious conditions necessitating hospital treatment, the long-term complaints in a tabulation of main diagnoses would tend to conceal the real reasons why the patients came to hospital. This rule should apply even though it causes apparent discrepancies between main diagnoses and causes of death. Many old people enter hospital as the result of injury and die from other causes; similarly, not a few people enter hospital with a "medical" diagnosis and, while they are in, undergo surgical operations for conditions not at all connected with the cause of admission. "Hard cases" will occur, but it is proverbial that hard cases make bad law. The hard case must be settled by an appeal to the clinician concerned.

It is possible to record all additional diagnoses, but, if the difficulties of compilation of statistics are not to be multiplied unendurably, it is reasonable to restrict the number of additional diagnoses recorded for statistical purposes. Provision is made at Johns Hopkins for 14 diagnoses to be recorded, if necessary. The New York Hospital Discharge Study called for one main and not more than 4 additional diagnoses. The Medical Research Council's Classification calls for one main and not more than 3 additional diagnoses. In both the New York Study and the M.R.C. Classification the additional diagnoses are required to be of different types, *i.e.* in each case the first additional diagnoses must be related to the main diagnosis (a complication); the second must be an accessory (unrelated) condition; and the third, a chronic state. The Oxford Bureau employs the M.R.C. Classification. A new classification, it is understood, is in course of preparation under the auspices of the World Health Organization of UNO, but as this has not been published it would be inappropriate to consider it here.

Another point which arises is the "right" of a condition to be included in the report. Thousands of minor conditions are discovered in hospital, occurring in patients who have been admitted for the treatment of major conditions; it is obviously a function of the clinician to discover them. Such common complaints as colds and minor digestive disorders not infrequently occur during a long hospital stay. If every condition, however trivial, is to be recorded, the reporting system will sink under their weight. It would be well, therefore, to lay it down that conditions discovered in hospital are not to be reported for statistical purposes unless, if the patient had not already been in hospital, they would have necessitated his removal there. This clearly would be a clinical decision. There is the allied question of whether every condition discovered, even if it meets the foregoing specification, should invariably be reported. If all hospitals possessed the same facilities for diagnosis, one might answer "Yes" to this. But all hospitals do not possess the same facilities; they could not all carry out a comprehensive diagnostic investigation. It would, perhaps, be well to lay it down that, to be reportable, "additional" conditions (especially permanent disabilities) should have some bearing upon the main disease, or influence the treatment of it.

With regard to the actual classification of disease into groups for statistical purposes, it must suffice here to say that a manageable list for all hospitals is urgently required. The subject of

CC-0. In Public Domain. Gurukul Kangri Collection, Haridwar

Digitized by Arya Samaj Foundation Chennai and eGangotri



classification would require a long paper, and those interested are referred to the Standard Nomenclature and the Introduction to the Medical Research Council's Provisional Classification.

As Stocks has pointed out, the provision of a generally accepted classification will not automatically solve all our troubles; different views will be taken, even at high levels, as to the categories to which certain terms are to be assigned.

One other matter should be mentioned at this stage, and that is the difference between a classification and a nomenclature. The one is a list of groups of diseases having some common characteristic, *e.g.* the system or organ affected, whereas the other purports to be a list of names in which every disease capable of description has its separate entry. The cross-referencing of names and categories can be and sometimes is a problem of great complexity.

An additional trouble arises when a classification of disease has imported into it subdivisions for causation. The Medical Research Council's Classification allots classification numbers to diseases and injuries, mostly of three or four digits. These may be prefixed or suffixed by letters of the alphabet and by numerals to indicate the various circumstances other than the name or nature of the disease. One example (intentionally complex, for the purpose of demonstrating the method) gives the coding for a "stillbirth, due to the mother developing peritonitis following a stab wound of the abdomen suffered during a fight." Although the interest which attaches to these "external causes" is undoubted, I feel that it should be reiterated that the two main objects of compiling hospital morbidity data are (1) to indicate, within the limitations of the method, the occurrence of major incapacitating disease or injury in the community, and (2) to tabulate the conditions for which the patients sought hospital treatment, analysing these more finely as required from time to time for the purpose of special studies. For the first object it is necessary to count all the diseases and injuries recorded, and for the second to count all the main diagnoses. The value as distinct from the interest of "other" information, such as external causes, infective agents, etc., as routine components of all transcriptions, is, in my opinion, largely conjectural. In any event, the establishment of techniques to perform the two functions mentioned is a considerable undertaking, sufficient to warrant exclusive attention for some years to come. When the task has been achieved, it is certain that the "other" information will be asked for by the "consumers" of hospital data, and my view is that it is better to wait to be asked for it than to offer it to those who may not make any use of it.

A question which arises is, "Should diagnoses be entered on 'transcriptions' by medically qualified persons, or may they be entered by lay persons trained for the work?" This is a question, I suggest, which should not arise at all. If the original records, *i.e.* the hospital notes on the patients, contain, as they should, notations of the diagnoses in a nomenclature generally employed, the transfer from nomenclature to classification and code number is more likely to be done accurately by a lay person specializing in such work than by a medical man, to whom such interruptions of his clinical work are tedious and annoying. The case for asking a medical man to enter the diagnosis on the statistical record, and even to code it, rests upon the undoubted fact that lay persons are not able, from a study of the case narrative, to divine the appropriate diagnostic terms for conditions treated. No lay person should ever be required to do such a thing. The summary of the completed case, mentioned earlier, is obviously incomplete if it does not contain an answer to the vital question, "What was the patient suffering from?"

Difficulties may also be raised with regard to operation terminology.

It seems to me that the development of surgical recording should proceed in stages. I do not believe there is any possibility of any body, not even a Ministry, fixing a D-Day after which all operations must be recorded on a *pro forma* which will describe pre-medication, anaesthesia, type of operation undertaken, type of incision employed, description of surgical procedure, surgical diagnosis, and narrative of operative findings. Such a *pro forma* would appeal to the tidy type of administrative mind, but not to all surgeons. There is one argument alone which disposes of any such plan: it is that the surgeon's time must be conserved, so that he spends practically all of it on his own job, namely, that of surgery. Any subtraction from his operating time must be a subtraction from the general well-being of the patients requiring his attention. Accordingly surgical recording must be organized so that the surgeon is relieved of all trouble beyond that of saying what each record shall contain concerning his own work. It should further be so organized that in making this personal contribution he is not required to engage in laborious, time-consuming clerical work.

CC-0. In Public Domain. Gurukul Kangri Collection, Haridwar

Digitized by Arya Samaj Foundation Chennai and eGangotri



These stipulations necessitate some nicety of pre-arrangement, especially in relation to the following things:

(1) There must be prior agreement on what are operative procedures and what are not.

(2) There must be agreement on which operative procedures are to be recorded and which not.

(3) There must be an accepted terminology of operations.

(4) There must be agreement on the point in time at which the end-result of a given type of operation is assessed.

(5) Every convenience must be provided for the surgeon to contribute to the record without interfering with his main job.

With regard to the first point, the Standard Nomenclature of Operations contained in the American Medical Association's publication entitled *The Standard Nomenclature of Disease and Operations* may be helpful. Fundamental surgical procedures are divided into nine groups, namely, incision, excision, amputation, introduction, endoscopy, repair, destruction, suture, and manipulation. If these are not the best titles, there is no reason why a British list should not be compiled. Given acceptance of basic groups, it is possible to define an operation: "An operation is the performance of any one of the basic procedures on any site of the body" (14).

This definition removes the doubts and queries which have confused the compilation of surgical data. First, the term operation is, by definition, inclusive of interventions for exploratory purposes as well as those for therapeutic purposes. Second, the term operation includes minor interventions, provided that the procedure is one of the basic procedures. Third, the term operation is not restricted to original interventions, but covers also subsequent interventions, as for the repair of a former incision. Fourth, the term operation is not restricted to interventions which are conclusive, but applies to each intervention in a series—for instance, pneumothorax refills.

Nevertheless, as the writers I am quoting correctly argue, surgical reporting in hospitals might be extremely misleading if it covered *all* the operative procedures performed on a hospital patient during his stay; for example, confusion rather than clarity would result if the extraction of a tooth or some other trivial intervention were reported as an operation simply because opportunity had been taken of a person's presence in hospital to carry out such a minor procedure. Rather, it should be agreed that hospital surgical reporting covers all operations performed in the exploration or treatment of conditions necessitating hospital care.

There are certain other matters which would tend to confuse the general picture if some safeguards were not adopted. The seemingly endless variety of ways in which humanity can suffer are matched only by the number of ways in which ingenious surgeons relieve the suffering, and this infinity of variants obviously makes possible so many combinations of complaints and operations that the data may defy compilation. Evidently some guiding principles are required. The first figure required in any general picture of surgery must be the number of persons receiving surgical treatment. The second figure must be the total number of operations performed, which will obviously be greater than the number of patients. The third figure is the total number of surgical actions taken during the various operations; for instance, if simultaneous excision of the appendix and an ovary is performed, we have two surgical actions, but only one intervention. Provision must therefore be made for these double interventions; and also for two-phase interventions, as in the case of prostatectomy.

With regard to operative terminology, we are on particularly difficult ground. The lack of a universally-accepted nomenclature of diseases is serious, so also is the lack even of a nationally-accepted nomenclature of operations. Every science has its own terminology, and the more advanced a science becomes, the more its exponents speak a technical language which "outsiders" do not normally understand. We know that we cannot expect surgeons to be their own statisticians; hence it is necessary for men and women who are not surgeons to learn surgical terminology in order to produce surgical statistics.

It is true that one can make oneself familiar with Latin and Greek derivations. It is true also that special dictionaries are available for reference. Moreover, knowledge is acquired through propinquity; when much in the company of surgeons, one picks up surgical terms. And, of course, I must admit that one can always obtain information by the method of asking someone who has the necessary knowledge. But it is not every non-surgeon who can manage all these

CC-0. In Public Domain. Gurukul Kangri Collection, Haridwar

Digitized by Arya Samaj Foundation Chennai and eGangotri



things, and there is difficulty in keeping on good terms with a surgeon whom one is constantly asking for elucidation of the terms he employs.

To be candid, the curse of the non-surgeon in dealing with surgical terminology is the eponym. This labelling of diseases with the names of the people who discovered them and of operations with the names of those who devised them is common. It is also very difficult to keep pace with. It becomes quite unmanageable when one comes across A's modification of B's version of C's operation.

No doubt many years of education and usage are required to bring about a uniform terminology to describe operations. I think, however, that where eponymic nomenclature is employed, a descriptive term should be added for the benefit of the inexpert.

One other matter which affects this question of classifying operations is this: Many hospitals print tables showing the number of operations performed in the various departments, *e.g.* so many operations in the orthopaedic department, so many in the gynaecological department, and so on. This is a clear example of the error inherent in most hospital reports, namely, that of describing the activity of the hospital and its units instead of turning the spotlight on to the patients and their medical and surgical content. Such reports show that surgeons are very busy, but neglect to state what they do.

Now, as to the end-results of operations. I have no wish to seem disrespectful to a great profession, but I have heard it said that surgeons have lived who counted their operations as successful if the patient were got off the table alive. Of course, this is the kind of overstatement which is used for purposes of emphasis. The underlying suggestion that successes are claimed without allowing sufficient time before making the final assessment is not so easily got rid of. From what I have been told, and from what I have myself read, the following-up of surgery is not as complete as purists would require. Doubtless the extreme preoccupation of the surgeon with his waiting-lists, his anxiety to do the greatest good for the greatest number, and consequently his lack of time to see old patients who haven't complained of anything, contribute to a certain perfunctoriness in following up patients over a period of years. Nevertheless, everyone knows that there are many surgical procedures the final effectiveness of which cannot be judged in any less time. It seems to me that it would be a good thing if a list were prepared of follow-up intervals for patients who have been operated upon for major conditions, and the interval which should elapse before a final judgment is recorded. This need not be an extensive list, for one would not expect follow-up dates and final assessment dates for rare conditions. Certain surgical interventions are extremely common; I will instance only such obvious procedures as appendicectomy, prostatectomy, and hysterectomy. If follow-up and final assessment dates were prescribed for only 12 or 20 of the commonest operations, some basis of comparability could be achieved. The experience of Mr. X could be matched with or against that of Mr. Y with more assurance than either party can enjoy at present. These lists of intervals need not be too precise; precision in these matters, where to-day's success is rendered out of date by to-morrow's discovery, can never be hoped for. The important thing is that the prescribed intervals shall be accepted by all concerned as conventional.

So far I have asked for agreement on a number of matters in order to facilitate the work of people who collect data for transformation into statistical form. Perhaps a word or two on aids to recording will be in season.

Although, for my sins, I have to design many forms, I feel entitled to say that I deprecate the excessive use of *pro formas*, questionnaires and "quiz" forms intended to guarantee the collection of all possibly relevant information. Note that I do not deprecate their use entirely, merely their use to excess. If they are restricted to vital facts and drawn up with the most extreme care so that the occurrence of the unexpected does not utterly confound the good intentions with which they were prepared, they represent the only rational way of collecting information on a large scale. The thing to be particularly resisted is the temptation to collect something interesting but not vital, merely because the opportunity to do so is there. If one is considering the collection of facts from 7, 700 or 70,000,000 records, one must not forget that every original scrap of data must be furnished by the patient or the clinician (from memory or from observation), and realize that requests for non-essential information can cause a great waste of time and fraying of tempers.

A form which requires a busy physician or surgeon to enter in it particulars which can be obtained as easily and as accurately by a clerk is not a sensible form. The physician or surgeon

CC-0. In Public Domain. Gurukul Kangri Collection, Haridwar

Digitized by Arya Samaj Foundation Chennai and eGangotri



should be asked to complete only that part of a form which cannot be completed by anybody else. If he has already written or dictated the needed information in some other document, he should not be asked to repeat it. Someone should copy it from the other document. If he knows that this is being done, and that when he is asked to write it is because original information is required which he alone can give, he will not, I believe, object. He will realize that a first-hand note is the only sure way of recollecting the very facts about his patients which he himself may one day wish to recall.

The basic forms, therefore, for the collection of hospital data should be as simple as possible. Certainly they should not be made to appear complicated by the inclusion of headings covering rare occurrences. I am all against omnibus forms which provide for details not generally applicable, or at any rate not applicable to a substantial fraction of all cases. For the statistician (or the physician or surgeon) interested in a particular disease or a particular operation, a special form should be designed, amplifying the basic form. Special forms for cancer, for obstetrics, for children born in hospital, and for injuries, should, I think, be routine. It will be found that the practitioners who specialize in these matters usually extend a very warm welcome to the statistician who offers to co-operate with them in investigations. When the physician or surgeon is made an accomplice in the undertaking, there is rarely any difficulty in convincing him that, since the special transcription is of a more refined character than the basic transcription from which the broad picture of hospitalized illness is prepared, it is necessary for this transcription to be made out by himself or a medically qualified assistant. Specimens of such forms are appended to this paper.

Forms need not inhibit physicians and surgeons who like to browse through a circumstantial narrative as well as a list of categories into which the patient fits or does not fit. Narrative requires nothing more than paper, which can be added by the ream, if required. All that is necessary in such a case is to make it clear that the narrative must be additional to the basic report-form.

As to the method of preparing tabulations from transcriptions, it will be obvious that where large numbers of reports are obtained, as would be the case in national insurance statistics and national hospital statistics, machine methods of tabulation are the obvious choice. Any other method would mean an altogether excessive employment of man-power. It is advantageous, therefore, to design the transcription in such a manner that the information entered upon it codes itself so far as possible. The forms comprising the schedules to this paper are designed in this way. There is thus no demand upon the punch-operator to interpret any written matter. The column and position numbers are pre-printed, and she can concentrate her attention upon them. Punching speeds are materially increased by this method. No claim is made for aesthetic quality in the forms illustrated.

Checking procedures are required at the transcribing, coding and punching stages. Transcription will normally be carried out at the hospital, and the forms will be transmitted to the place where the punched cards are to be created. It is advisable to arrange for a "running audit" of the work of transcribers; a simple method is to take a random sample of transcriptions by an individual worker, list the patients to whom they relate, stating their admission and discharge dates, and to send a check-transcriber to repeat them. The check-transcriber does not see the original transcriptions. The results of the two workers are then compared, and inefficient or slack workers may be detected before they have done any material damage.

With regard to coding, this checking technique does not suffice, and it is advisable to check-code every transcription. Check-coding does not take as long as original coding, but it is, of course, more expensive in man-power than the running-audit method.

Check-punching of cards is of the highest importance, and, in my opinion, automatic verification is preferable to the ordinary hand method.

There is some division of opinion among those interested in the collection of hospital and insurance statistics on a national scale on the question whether tabulation should be done at one point for the whole country, or on a regional basis. It seems to me that the suggestion for regional tabulation has more advantages than its rival. Regional tabulation should lead to quicker production of the national picture. I consider that a dozen regions working simultaneously to produce tabulations for central consolidation would produce the final picture more quickly than central tabulation, with its inevitable bottlenecks and priorities. An advantage of regional tabulation would be that, as each region would possess the necessary organization and equipment, special

CC-0. In Public Domain. Gurukul Kangri Collection, Haridwar

Digitized by Arya Samaj Foundation Chennai and eGangotri



investigations of different types could be conducted (on the regional scale) simultaneously. For example, Region A could carry out a special study of appendicitis, while Region B was inquiring into obstetric complications, and Region C into rheumatic heart disease. There are many instances in which it would not be necessary to do detailed studies on a national scale, although studies on a sampling basis might not meet the case. Another point is that hospitals, for example, would probably collaborate better with a regional organization than a national one: the "intimacy" of contact is greater. I am assuming, of course, that the tabulating organisation, central or regional, would offer its resources to individual hospitals and even individual investigators—"two-way" service, in fact.

Although I am satisfied that it is practicable and worth while to institute a national system for recording hospital data and insured sickness data, it would be absurd to argue that the task would be an easy one, having regard to present difficulties. The general public, one imagines, would have to be "sold" the idea, for many people have an insuperable objection even to the impersonal use of facts relevant to their health or sickness. There is also the professional ethic to be considered. It will need good public relations work, based on the most authoritative assurances, to convince the public that names are not necessary for this type of statistical inquiry. (One may observe, in passing, that if names could be used, an excellent opportunity would be presented of preparing medical life-histories, for in a country where so large a proportion of the population is to avail itself of public medical service in one form or another, it would seem that "health-diaries" will be a real possibility.)

The public apart, there is also a great need for the education of the medical profession, which would probably not deny that statistics is not one of the subjects to which it is irresistibly attracted. So far as the surgeons are concerned I can say this authoritatively, for it was so stated by the President of the Section of Surgery of the Royal Society of Medicine, at a meeting which I attended in November.

There is another obstruction, of a very practical kind, to be overcome before hospital records can be made fruitful in the sense we are discussing. Hospital records departments are not organized to furnish statistical data. Municipal hospitals have been accustomed to render certain returns to their owning authorities and, through them, to the Ministry of Health, but voluntary hospitals, so long as they satisfied their subscribers that the hospital was busy, have never been required to furnish balance-sheets of their actual achievements. The tabulation of their patients by diagnoses, and the construction of tables classifying them by the ordinary demographic factors, have never been recognized by voluntary hospitals as necessary or even desirable practices. Their records departments have not, as a rule, been called upon to do more than produce the old notes of patients reappearing with old and new complaints. In many hospitals notes are kept on a departmental basis, so that the same patients may appear in many files. In-patient and out-patient notes are quite customarily divided, even by the length of the hospital. Units tend to introduce "internal" records systems; sometimes one has found as many as a dozen different records departments in a single hospital.

A fundamental requirement—indeed, a prerequisite—of an effective scheme of morbidity reporting so far as hospitals are concerned is the reorganization of these departments. Standard techniques on broadly uniform lines are inevitable. Equally inevitable are the discovery and encouragement of persons skilled in these techniques—that is to say, the development of a new profession or vocation of medical records officer. The accurate registration of all patients; the preparation (so far as non-clinical content is concerned) of the record itself; the responsibility for seeing that the necessary clinical and departmental entries are made; the efficient storage of records; their production when required for the immediate treatment of patients and for educational, research and administrative purposes; the abstraction of morbidity data from completed records —all these are tasks which, taken together, provide an interesting and a skilled occupation. If to these duties can be added that of assisting physicians and surgeons in simple statistical inquiries at "hospital level," and of co-operating, however undramatically, with regional and national statisticians in special studies, it will be agreed that here is a career capable of attracting the best type of person. The production, care and custody of medical records, and the tabulation of data extracted from them, are not tasks for the newest clerk. Neither should the medical records system be the toy of the fledging medico; nor yet the pastime of the administrator who does not like accounts. It is a job for which people should be trained, and in which they should specialize.

CC-0. In Public Domain. Gurukul Kangri Collection, Haridwar

Digitized by Arya Samaj Foundation Chennai and eGangotri



BERKS., BUCKS. AND OXON REGIONAL HOSPITALS COUNCIL

BUREAU OF HEALTH AND SICKNESS RECORDS

ADMIN. 10

*IN-PATIENT at*.....*HOSPITAL* REF. NO.....

| DATE ADMITTED D. | M. | Y. | JOB NO. 2 | MTH. ADMITT. 3 | 4 | B.H.S.R. NO. 5 | 6 | 7 | 8 | 9 | 10 | DATE DISCHARGED D. 11-12 | M. 13-14 | Y. 15-16 |
|---|---|---|---|---|---|---|---|---|---|---|---|---|---|---|
| | | | 1 | | | | | | | | | | | |

SURNAME | CHRISTIAN NAME(S)

PREVIOUS NAME (if changed recently) | NAT. REGN. NO.

HOME ADDRESS

PHYS./SURG. | OCCUPATION

17 | 18 | 19 | 20

Source 21
1. Own Dr.
2. Hosp. O.P.D.
3. Accident
4. Emerg., Not Acc.
5. Other hospital
6. Birth
7. Staff Case
8. Re-admission
9. Any other source or not stated

Town Code
22 | 23 | 24 | 25

Sex 26
1. Male
2. Female

Date Birth D. | M. | Y. 27–28

Age group 29 | 30

Religion 31
1. C. of E.
2. R.C.
3. Non-Con.
4. Hebrew
5. Other
6. Not stated

Civil state 32
1. Married
2. Single
3. Widowed
4. Divorced
5. Separated
6. Not stated

Index 33
1 P | 2 F | 3 M | 4 H | 5 N.I.

Occupn. Code
34 | 35 | 36 | 37 | 38

Social class 39

Hosp. code 40 | 41

Pay status 42
1. Private
2. Full pay
3. Part pay
4. Free
5. Contrib.
6. Not stated

Contrib. Sch. 43

Accident 44
1. Road or rail
2. At work
3. At home
4. At play
5. Other
6. Not applic. or N.S.

Dismissal 45
0. Not stated
1. H.M. O. Dr.
2. Hm. O.P.D.
3. Hm. O.–Cl.
4. Hm. N.S.
5. Other hos.
6. Con. home
7. Duty or unit
8. Self dis.
9. Dead

Cond. on disch. 46
1. Cured
2. Improved
3. No change
4. Worse
5. Dead. P.M.
6. Dead. No P.M.
7. Not stated

CC-0. In Public Domain. Gurukul Kangri Collection, Haridwar

Digitized by Arya Samaj Foundation Chennai and eGangotri



| | | | | | | |
|---|---|---|---|---|---|---|
| MAIN OPERATION | | | No. of Ops. 47 | Opn. Code 48 | 49 | 50 |
| ANAESTHETIC | | | | | Anaes. Code 51 | 52 | 53 |
| DIAGNOSIS | 54 | 55 | 56 | 57 | 58 | 59 / / 1 |
| DIAGNOSIS II | | | | | | / / 2 |
| DIANGOSIS III | | | | | | / / 3 |
| DIAGNOSIS IV | | | | | | / / 4 |
| NOTES | No. of Diags. 60 | Days in code 61 | Days in Hospital 62 | 63 | 64 | 65 |

Transcription No.

| | Transcribed | Coded | X-Coded | Punched | Verified | Corrected |
|---|---|---|---|---|---|---|
| Initials | | | | | | |
| Date | | | | | | |

CC-0. In Public Domain. Gurukul Kangri Collection, Haridwar

Digitized by Arya Samaj Foundation Chennai and eGangotri



POWERS No. 1 2 3 4 5 6 | 1 | 4 | | | | |

CANADIAN RED CROSS MEMORIAL HOSPITAL
MATERNITY DEPARTMENT
ANALYSIS FORM

C.R.C.M.H. No.

SURNAME

CHRISTIAN NAMES

ADDRESS

| Town Code 7 | 8 | 9 | 10 | Date of Birth D. | M. | Y. 11–12 | Age Group 13 | Date Admitted D. | M. 14–15 | Y. | Date Discharged D. 16–17 | M. 18–19 | Y. 20–21 |
|---|---|---|---|---|---|---|---|---|---|---|---|---|---|
| | | | | | | | | | | | | | |

DETAILS OF ADMISSION 22

| | |
|---|---|
| A.N.C.—Slough | 1 |
| A.N.C.—Maidenhead | 2 |
| A.N.C.—Elsewhere | 2 |
| Unbooked—Social R. | 4 |
| Unbooked—Medical R. | 5 |
| Before labour | 6 |
| In labour | 7 |
| After labour—Maternal R. | 8 |
| Foetal R. | 9 |

CIVIL STATE 23

| | |
|---|---|
| Married | 1 |
| Single | 2 |
| Widow | 3 |
| Divorced | 4 |
| Separated | 5 |
| No information | 6 |

PARITY 24

| | |
|---|---|
| Nullipara | 1 |
| Primipara | 2 |
| Multipara | 3 |
| Not determined | 4 |

TERMINATION OF PREG. 25

| | |
|---|---|
| Survived undelivered | 0 |
| Died undelivered | 1 |
| Abortion | 2 |
| Premature labour | 3 |
| Labour at term | 4 |
| Post-mature labour | 5 |
| Spontaneous termination | 6 |
| Medical induction | 7 |
| Surgical induction | 8 |
| By abdominal route | 9 |

PELVIS 26

| | |
|---|---|
| Gynaecoid | 1 |
| Generally contracted | 2 |
| Playtpelloid (simp. flat) | 3 |
| Android (male) | 4 |
| Funnel | 5 |
| Rachitic | 6 |
| Anthropoid | 7 |
| Irreg. contracted | 8 |
| Not determined | 9 |

COMPLICATIONS OF PREGNANCY 27

| | |
|---|---|
| No complications | A |
| Toxaemia | B |
| Eclampsia | 0 |
| Hyperemesis gravidarum | 1 |
| Hypertensive vascular dis. | 2 |
| Chr. nephritis | 3 |
| Urinary infection | 4 |
| Haematuria (undetermined) | 5 |
| Threatened abortion | 6 |
| False labour | 7 |
| Varicose veins | 8 |
| Oedema | 9 |

28

| | |
|---|---|
| Ante-partum haemorrhage | |
| Accidental—Traumatic | A |
| Concealed | B |
| Revealed | 0 |
| Placenta praevia | 1 |
| Undetermined | 2 |
| Thrombophlebitis | 3 |
| Gonorrhoea | 4 |
| Cervicitis | 5 |
| Vaginitis | 6 |
| Bartholin abscess | 7 |
| Congen. abnorm. gen. tract | 8 |
| Fibromyomata of uterus | 9 |

29

| | |
|---|---|
| Ovarian tumour | A |
| Retroversion of uterus | B |
| Prolapse of uterus | 0 |
| Anaemia | 1 |
| Syphilis | 2 |
| Tuberculosis | 3 |
| Cardiac disease | 4 |
| Thyroid disease | 5 |
| Diabetes mellitus | 6 |
| Dis. of mammary gland | 7 |
| Appendicitis | 8 |
| Gastro-intestinal disease | 9 |

30

| | |
|---|---|
| Gall bladder disease | A |
| Pneumonia | B |
| Pleurisy | 0 |
| Other acute resp. disease | 1 |
| Other chronic resp. disease | 2 |
| Epilepsy | 3 |
| Psychoneurosis | 4 |
| C.N.S. disease | 5 |
| Vesicular mole | 6 |
| Prev. Caesarian sec. | 7 |
| Prev. pelvic floor rep. | 8 |
| Other complication | 9 |

PRESENTATION AT ONSET 31

| | Baby A | B | C |
|---|---|---|---|
| Not relevant | 0 | 0 | 0 |
| Occiput—ant. | 1 | 1 | 1 |
| Occiput—tran. | 2 | 2 | 2 |
| Occiput—post | 3 | 3 | 3 |
| Face | 4 | 4 | 4 |
| Brow | 5 | 5 | 5 |
| Breech | 6 | 6 | 6 |
| Transverse | 7 | 7 | 7 |
| Compound | 8 | 8 | 8 |
| Not determined | 9 | 9 | 9 |

DELIVERY 32

| | Baby A | B | C |
|---|---|---|---|
| Occipito-anterior | 1 | 1 | 1 |
| Occipito-posterior | 2 | 2 | 2 |
| Face | 3 | 3 | 3 |
| Forceps | 4 | 4 | 4 |
| Breech—Spontaneous | 5 | 5 | 5 |
| Breech—assisted | 6 | 6 | 6 |
| Caesarian section | 7 | 7 | 7 |
| Destructive opn. | 8 | 8 | 8 |
| Other | 9 | 9 | 9 |

CAESARIAN SECT. TYPE 33

| | Baby A | B | C |
|---|---|---|---|
| Classical | 1 | 1 | 1 |
| Extra periton. | 2 | 2 | 2 |
| Lower segment | 3 | 3 | 3 |
| Not relevant | 4 | 4 | 4 |

INDUCTION OF LABOUR 34

| | |
|---|---|
| None | 1 |
| Under 28 weeks | 2 |
| 28–32 weeks | 3 |
| 32–36 weeks | 4 |
| 36 weeks to full term | 5 |
| At term | 6 |
| After full term | 7 |

BLOOD LOSS 35

| | |
|---|---|
| Normal | 1 |
| A.P.H. | 2 |
| P.P.H. | 3 |
| Not determined | 4 |

COMPLIC. OF LABOUR 36

| | |
|---|---|
| No labour | A |
| Prem. rupture of membranes | B |
| Cicatrix of cervix | 0 |
| Uterine inertia—prim. | 1 |
| sec. | 2 |
| Tonic cont. of uterus | 3 |
| Contraction ring | 4 |
| B.B.A. | 5 |
| Prolonged lab. (+·24) | 6 |
| Multiple preg. | 7 |
| Hydramnios | 8 |

37

| | |
|---|---|
| Retained placenta | 1 |
| Rupture of uterus | 2 |
| Impacted shoulders | 3 |
| Inversion of uterus | 4 |
| Cephalo-pel. disprop. | 5 |
| Abnorm. of cord | 6 |
| Other than above | 7 |
| No complications | 8 |

LACERATIONS 38

| | |
|---|---|
| Not relevant | 1 |
| First degree | 2 |
| Second degree | 3 |
| Third degree | 4 |
| Of cervix | 5 |
| Of vagina | 6 |
| Episiotomy | 7 |
| Skin tear | 8 |
| None | 9 |

CC-0. In Public Domain. Gurukul Kangri Collection, Haridwar

Digitized by Arya Samaj Foundation Chennai and eGangotri



| OTHER OPERATIONS | 39 |
|---|---|
| Manual dilatn. of cervix | A |
| Repair of cervix | B |
| Incision of cervix | 0 |
| Evacuation of uterus | 1 |
| Tampon. of uterus/vag. | 2 |
| Manual removal placenta | 3 |
| Myomectomy | 4 |
| Hysterectomy | 5 |
| Hysterotomy | 6 |
| Sterilization | 7 |
| Successful ext. version | 8 |
| Failed ext. version | 9 |

| | 40 |
|---|---|
| Second perineal rep. | 1 |
| Second abd. repair | 2 |
| Forceps after-coming hd. | 3 |
| Transfusion—plasma | 4 |
| sal-gluc. | 5 |
| blood | 6 |
| Other | 7 |
| None | 8 |

| COMPLIC. OF PUERPERIUM | 41 |
|---|---|
| Died undelivered | 0 |
| Uterine infection | 1 |
| Infect. of perin. wound | 2 |
| abdominal wound | 3 |
| Fistula | 4 |
| Urinary infection | 5 |
| Rention of urine | 6 |
| Pyrexia—unknown origin | 7 |
| Disrupt. abd. wound | 8 |
| Paralytic ileus | 9 |

| COMP. OF PUERP. (*contd.*) | 42 |
|---|---|
| Delayed P.P.H. | 0 |
| Thrombo phlebitis | 1 |
| Pulmonary embolism | 2 |
| Degen. of fibroids | 3 |
| Retained secundines | 5 |
| Subinvolution of uterus | 5 |
| Retroversion of uterus | 6 |
| Anaemia | 7 |
| Flushed breast | 8 |
| Breast abscess | 9 |

| | 43 |
|---|---|
| Pneumonia | 0 |
| Pleurisy | 1 |
| Other acute resp. infect. | 2 |
| Transfusion reaction | 3 |
| Puerperal psychosis | 4 |
| Cardiac failure | 5 |
| Other | 6 |
| No complications | 7 |

| MORBIDITY | 44 |
|---|---|
| None | 1 |
| Notifiable | 2 |
| Non-notifiable | 3 |

| RADIOLOGY | 45 |
|---|---|
| No X-ray | 1 |
| Chest | 2 |
| Abdomen—for foetal shad. | 3 |
| for mat. lesion | 4 |
| Pelvimetry | 5 |
| Other | 6 |
| Baby | 7 |
| No information | 8 |

| RHESUS FACTOR—MOTHER | 46 |
|---|---|
| Rhesus—Positive | 1 |
| Negative | 2 |
| Not ascertained | 3 |
| Antibodies—Absent | 4 |
| Present | 5 |
| No test | 6 |

| RHESUS FACTOR—FATHER | 47 |
|---|---|
| Rhesus—Positive | 1 |
| Negative | 2 |
| Not ascertained | 3 |
| Antibodies—Absent | 4 |
| Present | 5 |
| No test | 6 |

| RHESUS FACTOR—INFANT | 48 |
|---|---|
| Rhesus—Positive | 1 |
| Negative | 2 |
| Not ascertained | 3 |
| Antibodies—Absent | 4 |
| Present | 5 |
| No test | 6 |

| RHESUS INCOMPATIBILITY | 49 |
|---|---|
| None | 1 |
| Icterus neonatorum | 2 |
| Haemolytic anaemia | 3 |
| Hydrops. neonatorum | 4 |
| I.U.F.D. (mac. foetus) | 5 |
| Incompat. anticipated | 6 |
| Incompat. unexpected | 7 |
| Infant survived | 8 |
| Infant died | 9 |

| ANALGESIA & ANAESTHESIA | 50 |
|---|---|
| None | 1 |
| Sedatives | 2 |
| Antispasmodics | 3 |
| Gas and air | 4 |
| Trilene analgesia | 5 |
| Inhalation anaes. | 6 |
| Intravenous anaes. | 7 |
| Spinal anaes. | 8 |
| Local anaes. | 9 |

| DISCHARGE OF MOTHER | 51 |
|---|---|
| Home | 1 |
| Gen. wards | 2 |
| Other hospital | 3 |
| Against advice | 4 |
| Died | 5 |
| Other mode discharge | 6 |

| SEX OF BABY | 52 | A | B | C |
|---|---|---|---|---|
| Male | | 1 | 1 | 1 |
| Female | | 1 | 2 | 2 |
| Not determined | | 3 | 3 | 3 |

| BABY RESULT | 53 | A | B | C |
|---|---|---|---|---|
| Dis. living and well | | 1 | 1 | 1 |
| Mother dis. undel. | | 2 | 2 | 2 |
| Still birth | | 3 | 3 | 3 |
| Neonat. death —24 hrs. | | 4 | 4 | 4 |
| +24 hrs. | | 5 | 5 | 5 |
| Trans. to babies' ward | | 6 | 6 | 6 |

| BABY DISEASES | 58 | A | B | C |
|---|---|---|---|---|
| Prematurity | | A | A | A |
| Birth inj. intracran. | | B | B | B |
| Nerve | | 0 | 0 | 0 |
| Other | | 1 | 1 | 1 |
| Congen. malform. | | 2 | 2 | 2 |
| Ophthal. neonat. | | 3 | 3 | 3 |
| Other infections | | 4 | 4 | 4 |
| Haemorrhagic dis. | | 5 | 5 | 5 |
| Haemolytic dis. | | 6 | 6 | 6 |
| Undiagnosed | | 7 | 7 | 7 |
| None | | 8 | 8 | 8 |
| Feeding difficulties | | 9 | 9 | 9 |

| CLIN. CAUSE FOETAL DEATH | 59 | A | B | C |
|---|---|---|---|---|
| No death | | 0 | 0 | 0 |
| Congen. defect | | 1 | 1 | 1 |
| Placental insuff. | | 2 | 2 | 2 |
| Birth inj. intracran. | | 3 | 3 | 3 |
| Other | | 4 | 4 | 4 |
| Destructive opn. | | 5 | 5 | 5 |
| Asphyxia | | 6 | 6 | 6 |
| Atelectasis | | 7 | 7 | 7 |
| Haemorrhagic dis. | | 8 | 8 | 8 |
| Haemolytic dis. | | 9 | 9 | 9 |

| | 60 | | | |
|---|---|---|---|---|
| Syphilis | | 1 | 1 | 1 |
| Respiratory infect. | | 2 | 2 | 2 |
| Gastro-enteritis | | 3 | 3 | 3 |
| Other infection | | 4 | 4 | 4 |
| Prematurity | | 5 | 5 | 5 |
| Post Maturity | | 6 | 6 | 6 |
| Cord complication | | 7 | 7 | 7 |
| Complic'n of preg. | | 8 | 8 | 8 |
| Other | | 9 | 9 | 9 |

| POST-NATAL EXAM'N | 61 |
|---|---|
| Not examined | A |
| Pelvis normal | B |
| Perineal deficiency | 0 |
| Cervical erosion | 1 |
| Retroversion of uterus | 2 |
| Prolapse | 3 |
| Breasts—Active | 4 |
| Inactive | 5 |
| Hypertension | 6 |
| Albuminuria | 7 |
| Anaemia | 8 |
| Other abnormality | 9 |

| INFANT CARD NO. | 62 |
|---|---|
| Infant A only | 1 |
| A+B | 2 |
| A+B+C | 3 |

| WEIGHT OF BABY | lb. | oz. |
|---|---|---|
| A | 54, 55 | 56, 57 |
| B | | |
| C | | |

If not relevant code "A"

| DAYS IN HOSPITAL | 63 | 64 | 65 |
|---|---|---|---|

NOTES

| Punched | 1st | 2nd |
|---|---|---|
| Verified | 1st | 2nd |
| Corrected | 1st | 2nd |

.....Registrar

.....Date

CC-0. In Public Domain. Gurukul Kangri Collection, Haridwar

Digitized by Arya Samaj Foundation Chennai and eGangotri



*References*

(1) Greenwood, M., *Epidemics and Crowd Diseases.* Williams & Norgate (1935, p. 51.)
(2) *Survey of Sickness, October*, 1943, *to December*, 1945. (Not on public sale.)
(3) Personal communication from Chief Medical Officer, Min. Nat. Insurance.
(4) *Report on the Vital Statistics of the Dominion of New Zealand*, 1942. E. V. Paul: Govt Printer, Wellington, N.Z.
(5) *M.R.C. Indust. Health Research Board Report* No. 79 (H.M.S.O.).
(6) *Idem*, No. 48 (H.M.S.O.).
(7) Department of Health for Scotland (1932, 1934, 1936), *Reports on Incapacitating Sickness in the Insured Population of Scotland.* H.M.S.O., London.
(8) Reprinted from *Hospital Records* by H. Cotton (*Lancet*, June 21, 1947).
(9) *Hospital Discharge Study*, **1**, 111, Neva R. Deardorff and Marta Fraenkel (Welfare Council of New York City, 1942).
(10) *Survey of Public General Hospitals in Ontario.* Part I, p. 14 (Div. Med. Stats., Ontario Department of Health), 1940.
(11) *Digest of Proceedings of Course-Conference for Hospital Records Officers*, Oxford, Sept. 13–20, 1947. (Not on public sale.)
(12) *Hospital Discharge Study*, **3**, 36.
(13) *Survey of Public General Hospitals in Ontario.* Part IV: Special Morbidity Studies.
(14) *Hospital Discharge Study*, **3**, 68.

## Discussion on Mr. Cotton's Paper

Professor Major Greenwood, in proposing a vote of thanks to the author, said: My interest in this paper is sentimental as well as scientific, because the first paper I had the honour of reading to this Society, in February, 1911, was a very humble contribution to Mr. Cotton's subject. It was based on the study of the admission books of the London Hospital from 1751 to 1903.

It has been said that the practice of our Society is for the mover and seconder of the vote of thanks to criticize the paper with almost Molotovian asperity. I cannot do this, but in order to be at least in the tradition I shall venture one or two literary criticisms.

Mr. Cotton suggests that the data of morbidity are less selective than the data of mortality. On the contrary, I suggest that they are more selective. Everyone in this room has made at least one entrance into medical statistics, namely, in the birth column, and everyone is going to make a second entry, in the death column, but quite a fair proportion of people in this room will never pass through the books of a hospital. I am not quite sure that I should agree with Mr. Cotton's statement that big numbers are preferable to small numbers in statistical tabulations without qualification; it is only true if the big and small numbers relate to comparable data. The great difficulty—and he has illustrated it in some of his tabulations—is the selective character of hospital data.

In the paper I read in 1911 there were statistics concerning the fatality of lobar pneumonia, not only from the London Hospital, but from other great hospitals in all parts of the world, including the Johns Hopkins Hospital at Baltimore. They were curiously uniform in time and in place. The fatality for males aged 41 to 50 treated for lobar pneumonia in hospitals varied very little above and below 40 per cent, but in the experience of the State Insurance Service in Germany, which was quite considerable even forty years ago, and in the not very extensive published data of general practitioners in England, the fatality rate was about half that of the hospital experience. The explanation is, no doubt, that the experience of general hospitals fifty years ago was heavily weighted by the admission of those "orphans of civilization," as Simon called them, "The common care whom no one cared for," as Tennyson put it, whose powers of resistance have been diminished by sorrow or misdoing, by lack of nutrition, and perhaps by alcoholism. Even without the therapeutic discoveries of our generation there would have been an improvement in the recovery rate in lobar pneumonia. It may be that in some fields the hospital population is now not an unfavourable but a too favourable sample.

With regard to Mr. Cotton's reference to matching Mr. X with or against Mr. Y, that would be all right as a joke over a cup of tea, but it is dangerous to joke over serious matter; the faintest suspicion that hospital records compiled on a national system would ever be used to the glorification or the disparagement of individuals would kill that system *in utero*, and I suggest that the joke might be omitted from the paper.

In this paper Mr. Cotton is mainly concerned with surgical statistics. Some years ago the Ministry of Health carried out a number of statistical enquiries respecting cancer. The plan of operation was this: statistical data were obtained concerning the survival of patients observed from diagnosis until death—patients who had received radical treatment in various ways and

CC-0. In Public Domain. Gurukul Kangri Collection, Haridwar

Digitized by Arya Samaj Foundation Chennai and eGangotri



patients who had received only palliative treatment—and the results were published in a series of eight or nine Reports. The most convincing were those relating to cancer of the breast, showing quite conclusively what were the results of radical surgery, and also how small a proportion of patients came under the care of surgeons at the most favourable moment for operation. The data relating to patients who had had only palliative treatment were useful in that they provided some sort of base-line, but statistically they were inadequate as insufficient detail was provided. I pause on this because I sometimes think that we do not give sufficient attention to common things which afford no scope for exciting statistical research and cannot lead to dramatic discoveries. Patiently to follow out the life-histories of some thousands of mostly elderly people who for various reasons are incurable, to note the changes from week to week or even from day to day, is a very dull employment, but it is in my submission very important. Many of us in our homes have watched the vicissitudes of a case of incurable disease, hoping against hope. You remember the lines of the poet, Tom Hood, usually regarded as a comic poet:

> "Our very hopes belied our fears,
> Our fears our hopes belied,
> We thought her dying when she slept
> And sleeping when she died."

That is common enough. We want statistics simply because the world is now statistically-minded. In the last fifty years many cures or palliatives for cancer have been discovered or revived, and in nearly every case statistics have been recorded. They never impressed surgeons or family practitioners familiar with the natural vicissitudes of incurable disease. Now, in a statistically-minded world, the inventor of a new cure or palliative might well use such an argument as this: "I claim that $x$ per cent of patients treated by my remedy have had their pain reduced. You say that pain is lost in many cases of inoperable carcinoma when the patient was not so treated. Where are your statistics?" The answer is that the raw material of statistics may exist in the case-books of doctors or of hospitals caring for incurables, but no statistician has extracted that information. It is not a piece of research I should have recommended to a young statistician with a name to make. It means a nation-wide collection of data. But it may save the raising of futile hopes and it may save expense.

Mr. Cotton is rightly anxious to relieve the busy surgeon of needless labour. I rather think Mr. Cotton may believe that given an adequate statistical organization, no personal intervention by the surgeon will be required after the patient has left the hospital. I doubt it. I have just been reading Professor Fulton's biography of Harvey Cushing, one of the great surgeons of the twentieth century. Cushing published a follow-up of patients in 2,000 cases of brain tumours on which he operated. It was a fine contribution to surgical statistics, and the reader of the biography will see that to acquire that wealth of precise information imposed immense labour on Cushing himself. His personal enthusiasm and the confidence and affection he inspired in his patients were essential to the success of his follow-up system. If patients know that there is a personal interest being taken in them by the surgeon who treated them they will help, but I am rather afraid that the statistical staff of a regional centre will inspire very little personal affection among patients.

I do not mean that valuable information cannot be assembled by mechanical operations, but unless surgeons are interested, not in the technical detail but in the principles underlying statistical analysis, we shall not have surgical statistics of the best kind. I see no reason at all why surgeons should not be interested in statistics. Many have been, and more will be. It is a matter of psychological adjustment. The surgeon, or, indeed, any doctor, knows that there is much truth about people which cannot be expressed by punching holes in cards. What a statistician must never do is to claim more for his art than it can perform. The sin of vanity has victims in all professions. Some doctors may falsely claim an insight into the value of treatment which rises superior to any arithmetical control. Yet that claim is not *always* false.

I remember the advice of a physician of the past generation to his students: "When a patient with organic disease of the heart tells you he is going to die and you can find no change in the physical signs, do not be in too great a hurry to disbelieve him." He pointed out that at the post-mortem it might be found that one of the vegetations on a valve had broken off, and that these fragments, passing into the circulation, might alter the sensations of the patient.

The point I am trying to make is that there is sometimes a knowledge which cannot be dealt with statistically. I, as a statistician, should like to test the old doctor's aphorism arithmetically, to find out whether the expectation of life of patients with premonitions *were* "significantly" less than that of patients without them, but I should not be in a hurry to disbelieve the old doctor.



CC-0. In Public Domain. Gurukul Kangri Collection, Haridwar

Digitized by Arya Samaj Foundation Chennai and eGangotri



I have no doubt, however, that Mr. Cotton agrees with me on this. I am sure he will help the surgeons, save them much labour and co-operate with them. I have much pleasure in moving a hearty vote of thanks to him.

PROFESSOR BRADFORD HILL: In the vital statistical school in which I was trained one acquired the habit of always asking oneself when considering a problem, "What did old Farr say about this?" Sure enough in this instance, as ever, he "spoke a mouthful." The registration of disease, he wrote, "will be an invaluable contribution to therapeutics as well as to hygiene, for it will enable the therapeutists to determine the duration and the fatality of all forms of disease under the several existing systems of treatment in the various sanitary and social conditions of the people. Illusion will be dispelled, quackery, as completely as astrology, suppressed, a science of therapeutics created, suffering diminished, life shielded from many dangers. The national returns of cases and the causes of death will be an arsenal which the genius of English healers cannot fail to turn to account." Perhaps Farr was a *little* optimistic about the value of such returns, but there is no doubt that, 80 years later, Mr. Cotton is ranged on the side of the angels. One cannot, however, but wonder what the "Doctor" would have said to an arsenal that was annually replenished with 70 million records. He might well have been taken aback and turned his genius to a consideration of sampling methods. Even if attention is limited to Mr. Cotton's universe, hospital in-patients, the numbers are, on his estimates, still very great—perhaps 5 millions annually. Leaving aside the medico-administrative aspects of these records they may be viewed from two aspects—what might be called the general and the particular.

Under the former lies the problem of using sickness statistics to widen our view of the state of the public health. The assertion that the health of the nation was never better is not wholly convincing when it must be based largely upon the incidence of mortality—and the advances in curative medicine may also make the death rate a less sensitive measure of environmental conditions. Hospital statistics would add to the picture, though alone they certainly suffer from some serious limitations, as Mr. Cotton observed. For instance, taking the diseases discussed by Professor Greenwood, it has been claimed that with chemotherapy "the results are such that pneumonia can be treated at home and be reduced to a 'two-day' fever. Should no response follow within 48 hours the case should be reviewed at once and the facilities provided by the hospital for further investigation and treatment be employed" (*B.M.J.*, Dec. 13 1947, p. 950). Such changes in time in the composition of a hospital population must seriously affect, not only the recorded incidence of the diseases enumerated from time to time, but also their fatality rates. In remembering Lord Kelvin's statement, quoted by Mr. Cotton, we shall have to ask ourselves continually. "Do we know *what* we are measuring, *what* we are speaking about?" Without clarity on that point our knowledge, though based upon astronomical numbers, must be "of a meagre and unsatisfactory kind." On the whole, I should agree with Mr. Cotton that hospital statistics would add to our knowledge in the public health and epidemiological fields—revealing something of the time trends of non-fatal disease, something of their correlations in time and space, and of their age and sex relationships—though sufficient data might be obtained for that purpose by a sampling method. I agree with Mr. Cotton most emphatically that any such record of a patient must be of the simplest possible nature and, at least at first, strictly limited to fundamentals. Any attempt to answer endless questions rapidly would be doomed to failure. It is doubtful, I think, how much one could obtain accurately on the occupational aspects of sickness, As shown in death registration and in census taking, a precise statement of a person's occupation is not easy to obtain. In this respect, too, are sickness statistics likely to be materially more accurate than the death registers, at least at ages 20–65? Admittedly the soldier might die a commissionaire. It was no less true that he might acquire, say, rheumatic fever in the army as a young man and later enter hospital as a commissionaire with heart disease. Cause and effect could be no more efficiently related in one case than the other. An essential requirement, too, would be a knowledge of the exposed to risk if the ambiguities and uncertainties of proportional rates were to be avoided. For example Mr. Cotton's Table VI showed that in each age group women have *proportionately* fewer motor-vehicle accidents and *proportionately* far more falls, etc. But for a clear picture the fracture *rates* of each sex were required and that demanded a knowledge of the numbers at risk—not at all easy to come by, since the populations served by specific hospitals were usually unknown.

Under the "particular" aspect of hospital statistics I should include such specific problems as the results of different forms of treatment, the comparison of different surgical procedures and so on. I do not believe that any general statistics routinely collected are going to provide answers to such difficult questions—any more than I believe that "the method of choice" can be satisfactorily determined from the treatment of five patients of whom two were lost to sight! Mr.

CC-0. In Public Domain. Gurukul Kangri Collection, Haridwar

Digitized by Arya Samaj Foundation Chennai and eGangotri



Cotton would doubtless agree that a carefully planned inquiry uniformly applied over a limited number of hospitals and specially "laid on" for a limited time is the most hopeful line of approach. We could not hope to get either the necessary detail or effective comparisons between groups if we rely upon the daily round, the common task, to supply the required statistics. In the enquiries into sickness incidence which I made for the Industrial Health Research Board it sometimes seemed a burdensome job to find every time and analyse a control group as well as the particular group believed to be differentially affected. But in the absence of any national or standard rates one had to do that. On the whole, however, I believe it is the best way. Sickness rates may vary for many reasons, and one might reach a much sounder conclusion by comparing, for instance, the incidence of respiratory illnesses in the cardroom workers of a cotton mill with that of their associated spinners than by taking any general rates of illness for the population at large as the standard. Similarly with hospital statistics, problems will not be solved merely because an efficient recording system has been developed. The appropriate comparisons must be thought out, and an *ad hoc* scheme developed for collecting the data. This indeed is what the Oxford Bureau is doing, for example, in its inquiry into hospitalized injuries mentioned in the paper.

The Oxford Bureau has now collected hospital records for some three years. Mr. Cotton, for reasons given, had been unable to report the results of this work, but I much hope that he may be willing to place before the Society a further paper incorporating them and thereby showing the importance of these data. For his present timely and thought-provoking contribution to the Society's proceedings I have much pleasure in warmly seconding the vote of thanks.

Mr. B. BENJAMIN said Mr. Cotton was to be congratulated on a very able and comprehensive discussion of the centralized collection of hospital records. Such a centralized system was accepted by the hospitals in the Oxford region for reasons which had long been applied in practice by local authorities in the name of "public health," now altered to that of "social medicine." Municipal authorities such as the L.C.C., which became a very large hospital authority overnight in 1930, had to accept and provide for this form of centralization, and the use of punched cards, for additional compelling reasons vulgarly epitomized as "business efficiency." Indeed it was surprising that the central tabulation of hospital records at Oxford could still be regarded thirteen years later as an *experiment*, when during that interval several local authorities had reaped advantages from such organization.

Perhaps the experimental aspect was to be found in Mr. Cotton's paper when he said, "Municipal hospitals have been accustomed to render certain returns to their owning authorities and through them to the Ministry of Health, but voluntary hospitals, so long as they satisfied their subscribers that the hospital was busy, have never been required to furnish balance-sheets of their actual achievements."

The Oxford project was undoubtedly more inclusive, a fact to which he would refer in a moment. At this point, however, he wished to emphasize the need to separate the consideration of methods and aims. The most important question was, "should the hospital records be collected at all, and if so for what purpose?" When that was answered, the methods—for example, use of machinery, diagnostic classifications, filing, drafting of questionnaires—followed naturally by the application of the general principles of efficient office methods which applied to all analogous organizations, whether it was accounting for money or for human beings.

The search for a satisfactory morbidity index had occupied public health statisticians for generations. The opportunity which came in 1930 to study the clinical records of municipal hospitals raised hopes that the solution was at hand. He had personally been disappointed. It could not be over-emphasized that the analysis of hospital records must be performed if the medical officer was to exercise efficient administration of his resources for the treatment of disease; they must be analysed with all the skill which Mr. Cotton had laid down as necessary, and which he exercised himself, but as a source of information of morbidity that analysis might be misleading, and its continued use for that particular purpose should be seriously questioned.

Mr. Cotton said that the onus was on the speaker to prove his point—just as in the days of plenty one often had almost to prove to the salesman that one did not need his vacuum cleaner. But he accepted the challenge and stated his reasons, which were as follows: the disease pattern of a hospital was liable to change, not because a particular disease became more prevalent in the area served by the hospital, but because either a change in medical practice dictated that the disease should be given more hospital treatment than before, or because a particular specialist worker in the hospital asked for more material. There were simpler reasons for discontinuity; for example, many patients now had to be treated at home because there were insufficient nurses to staff the available hospital beds. The trend of admissions for a particular disease was often therefore quite unrelated to actual variations in incidence. In short, hospital statistics had a very high

CC-0. In Public Domain. Gurukul Kangri Collection, Haridwar

Digitized by Arya Samaj Foundation Chennai and eGangotri



domestic value (for teaching or administrative purposes) but little public health value. It must be agreed that the more inclusive nature of the Oxford combination removed some of the difficulties he had mentioned, but too many difficulties remained.

Before the war the hospital services in the country were expanding, the demand for hospital as distinct from domiciliary treatment was growing. The annual number of patients treated by the L.C.C. acute general hospitals rose from 145,823 in 1931 to 184,644 in 1937. The effect of that expansion in facilities for treatment was that despite a fall in the birth rate, women confined or treated in hospital for diseases associated with pregnancy rose from 14,734 to 29,275; despite a declining incidence of tuberculosis patients treated for that disease rose from 5,315 to 5,624; and patients treated for neoplasms rose from 5,252 to 8,299, a rise out of all proportion to the slight rise in incidence due to the ageing population. On the other hand, treatment for diseases of the nervous system fell from 12,452 to 10,166. In those circumstances who would say that that represented reduced morbidity from nervous diseases?

In 1939 the expansion was stopped by the war, and since then there had been a shortage of beds so acute that the normally large rise in bed occupation from a summer trough to a winter peak was now very small—there was a queue for beds. Next year the National Health Service began what must necessarily be a large transitional period of adjustment. Who would prophesy when there would be a period of stability, which would be a prerequisite for hospital statistics to reflect morbidity? At the moment those figures suggested, not those who needed treatment, but those who were lucky enough to get it. He would prefer to see the same energy, the same facilities, the same ingenuity, applied to extract information as to morbidity from the only people who knew anything about it but were at present too busy to tell, namely, the general practitioners up and down the country.

They did not need the bait of a morbidity index to entice hospital staffs to keep good records, the necessity for which, as he had already stated, could not be questioned in relation to administration, teaching and research.

If Mr. Cotton would forgive him for mixing provocation with praise still further, he would question the generalization that "big numbers are preferable to small numbers in statistical tabulation." He had often experienced the frustration of having too few cases to reach a significance level, but he thought they should beware of going to the other extreme. Where astronomical numbers were involved, he suggested that it would be as efficient and certainly more economical to proceed by random sampling. He was glad that Mr. Cotton had stressed simplicity; indiscriminately voracious statisticians were a menace.

He agreed that regional tabulations might be preferable to national tabulations in that they would avoid the difficult problem of priorities. In London he had to wait until July before the detailed mortality statistics of the previous year were available. That was not the fault of the General Register Office, which had always been extremely accommodating—they just had too much to do.

Mr. HEADY wished to take the opportunity, as a worker in Mr. Cotton's field, of congratulating him on this paper, which was so clearly and interestingly presented. He hesitated to challenge so many distinguished opinions on the value of morbidity statistics. He personally felt that contact with existing mortality figures had shown their extreme value, and that morbidity figures could not but reveal more than mortality figures. The fact that they were selective and so on was undoubtedly true, but he thought that as statisticians we ought to be able to cope with that matter.

The advent of the National Health Service meant a new general offensive on ill-health; and the war had shown everyone the value of a good intelligence service. He felt that morbidity statistics could at least reveal the main strength of the enemy, and at what points he was waxing or waning.

Continuing the military metaphor, so far there had been brilliant raids into enemy territory, many positions had been reduced and many offensive weapons captured. But now, he thought, they had reached the stage where the law of diminishing returns was beginning to have effect, and where, in order to obtain comparable results, they would have to proceed by more painstaking and laborious means. In fact, they had reached the enemy's main positions—cancer, tuberculosis, and so on—and they had to use all the resources within their power, including morbidity statistics. Perhaps the military metaphor was a little fanciful, but it did bring out points. The first was that only a limited manpower was available, and doctors must not as a routine matter be expected to fill in a whole lot of data in which they were not interested. He felt that doctors took a pride in recording a correct diagnosis, and also a correct description of the operation or of any surgical treatment. In his view that was the limit of what should be required as routine method from the medical profession. The other demographic details could be obtained by clerks and the work thus reduced to a minimum.

CC-0. In Public Domain. Gurukul Kangri Collection, Haridwar

Digitized by Arya Samaj Foundation Chennai and eGangotri



Routine medical statistics would not solve particular problems. In these problems, admittedly, a lot of questions must be asked if a general picture was to be obtained. In his view, the ideal morbidity return should be just as simple as a death certificate. Special subjects were interesting fields for investigation, but they should not be the subject of routine investigation. Here, again, he knew from experience that once doctors were brought in at all stages of investigation they would co-operate at all times.

He wished to support one particular point in the paper, namely, Mr. Cotton's plea for a more general, indeed a nationally recognized, operation code. The one in the Medical Research Council's morbidity classification was inadequate; one nationally accepted would be a great boon.

Mr. SUTHERLAND said that Mr. Cotton had not only convinced them of the desirability and practicability of collecting morbidity data, but had pointed out some of the inevitable difficulties which arose in the process, and in the interpretation of the findings. The difficulties had been further stressed by Professor Greenwood and Professor Bradford Hill. Statisticians, especially those of the younger generation, were very fond of inventing new techniques, but there was little purpose in such activity unless the material to which those tests and techniques were applied was reliable and accurate. Mr. Cotton had given them a valuable reminder that unless statisticians were very careful they would say all sorts of stupid things about hospital figures because they took them at their face value, whereas a deeper knowledge was required of the fundamental factors governing their differences. Examples given by Mr. Cotton indicated how the knowledge of the type of work done at the local hospitals and of the classification system in use explained differences between hospitals which might, if these were not understood, be attributed to medical factors.

He felt that this question of statisticians having a more intimate knowledge of the investigations on which they were engaged was a very important one. Professor Greenwood had told them that unless they had the surgeon's interest in the investigation which was being undertaken, their records would not be a great deal of use. He would suggest that that might be carried further, and include everyone connected with an investigation from the most junior clerk upwards. He was talking the other day to the safety engineer of a factory with regard to an investigation in which he was concerned, with the assistance of Mr. Cotton's department, and he was struck by the engineer's interest and his insistence on accuracy. Unless statistics were accurate they were valueless.

The main difficulties which Mr. Cotton had outlined in the collection of morbidity data were imperfections in the original records, the nomenclature and the classification. These difficulties applied equally in mortality registration. One had only to glance at the old records to realize how mountainous those difficulties were in Farr's time. But despite this the original mortality statistics were of very great value. The imperfections had only been ironed out by degrees, and it would be absurd to suppose that morbidity statistics could immediately attain the reliability which mortality statistics had taken over a century to reach. But despite their initial imperfections, they would prove to be of great value.

Mr. MADDEX spoke of the importance of knowing in appropriate detail the population at risk, if this subject was to be studied properly. Unless that was known, hospital statistics must suffer from ambiguity, besides having a limited usefulness. Another fact which it was necessary to emphasize was that a stay in hospital was only an intermediate and indefinite stage in a certain proportion of illnesses. If hospital material was to be employed for the statistical study of morbidity one ought to be prepared to link it up with the pre-admission stage and the post-discharge stage of illness.

It was clear that sampling methods would have to be widely adopted for the investigation of the mass of statistical material provided by the new National Insurance and Health Services. He considered, however, that Mr. Cotton had seriously overstated the number of claims concerned; it was not quite so overwhelming as 50,000,000 a year. It must be remembered that 1,000,000 sickness claims a week did not represent the number of new claims every week, but the average number sick, and in many cases the sickness related to more than one week, indeed, to many weeks; the annual number could not therefore be obtained by multiplying the weekly average by 52.

This led him to his final point. He was speaking as an actuary, knowing nothing about hospital administration or medical study of durations of stay in hospital, but when Mr. Cotton made a short reference to sickness investigations some might conclude that there was no statistical information concerning sickness—or at least no information worth while—until recently. In fact, this all started with the investigations undertaken on behalf of the old Friendly Societies, and he drew attention to the work of Sir Alfred Watson more than forty years ago in connection with the

CC-0. In Public Domain. Gurukul Kangri Collection, Haridwar

Digitized by Arya Samaj Foundation Chennai and eGangotri



Manchester Unity experience of sickness. This related to men only, but it analysed seven million weeks of sickness by reference to age, geographical area and broad occupational grouping, and was really the starting-point for most of the subsequent statistical investigation in that field. Since then the National Health Insurance system had provided a good deal of material for investigation, but unfortunately, apart from one or two short reports, the bulk of the work on that experience had not been published. He thought, however, that the reports issued by the Department of Health for Scotland demanded rather more reference than Mr. Cotton had given them. These investigations of the sickness experience of the Scottish insured population, made yearly from 1930 up to the beginning of the war, gradually growing in detail and in variety of matters investigated, formed an extraordinarily interesting series of reports which would repay study by anybody working in that field.

Mr. MANDEVILLE wished to refer to another aspect of morbidity statistics. It seemed to him that the art of medicine had largely evolved by the use of one particular form of statistical method, namely, the integration of successive impressions on the human brain. It was impossible to impart the necessary knowledge to the student who walked the hospital except by subjecting his brain to a series of successive impressions, which were eventually integrated into a balanced judgment—something far too complex to be expressed in figures. It seemed to him, therefore, that if one wished to further the study of morbidity statistics, it was essential not to forget the superior integrating mechanism of the human brain, which, if enabled to receive impressions of complex details of a series of cases, could often form sound conclusions. The facility for the rapid display of series of cases, permitting research with minimum fatigue, was surely one of the important aspects of any scheme for improving our knowledge of disease.

It seemed to him that when they talked about coding medical records and analysing them centrally they needed to remember the old proverb, "Thou shalt not muzzle the ox that treadeth out the corn." The physicians and surgeons who took the trouble to code case-sheets were the "oxen" in this plan, and it was very desirable to leave them some corn to reward them. The regional centre could perhaps supply them with copy packs with the codes printed along the tops of the cards, sorted to diagnosis order—a comparatively cheap facility afforded by the punched card system. Individual hospitals would thus be presented with a valuable tool enabling local research work to be conducted over a wider field more rapidly.

At present there happened to be a committee considering the subject of the distribution of information. Organized by "ASLIB" at the request of D.S.I.R., this committee was studying, amongst other matters, the way in which this information could be handed out to the research worker without necessarily involving reference to the original document. If it were possible, as was envisaged by certain members of the committee, to convey on the punched card used in the search for information a micro-print of part or the whole of the original document, then reference to the actual case-sheets would be avoided. The research worker would be able to take the actual cards and put them under a magnifying viewer and read the case-notes straight away. This might be a distant prospect, but it should be kept in view. He hoped that in any regional set-up that Mr. Cotton might influence, the facility for rapid reference to actual case-notes would be kept in mind.

Mr. W. R. BUCKLAND wrote, after the meeting, as follows: It was raised in the discussion at the meeting that some mechanism should be found for the "rapid referencing" of case-history material. This plea seems to arise from the desire of groups of hospitals, possibly smaller than a Region, to be able to interchange case-history material with the object of broadening the basic information of this kind available at a single hospital. Apart from the obvious difficulties associated with reading a card of the size and type used by the two leading manufacturers of non-manual punched card equipment, there would be the undoubted difficulty of supplying the necessary equipment upon a hospital basis.

It would seem that a case is made out for the close investigation of the less well-known punched-card systems which are suitable for medium size tasks and for manual operation. One such system, the "Findex" system, has actually been used with the statistics of road accidents, the National Blood Transfusion Service, and at the Roehampton Hospital, which deals with artificial limb cases. The card used measures 8 inches square and can take a considerably detailed pre-printing; a further advantage is that any installation can be expanded on a unit basis of 800 cards. This type of equipment is more freely available than the non-manual kind, and should be able to take detail such as is shown on the form used by the Berks, Bucks and Oxon Regional Hospitals Council (see page 28).

CC-0. In Public Domain. Gurukul Kangri Collection, Haridwar

Digitized by Arya Samaj Foundation Chennai and eGangotri



I should also like to comment upon the personnel and staff training problem raised by Mr. Cotton in the last paragraph of his valuable paper. He gave no recommendation as to the level at which he would place the new medical records officers, but it may possibly be deduced from his description of the work. The medical records officers should be familiar with hospital organization and routine and possess a basic training in statistical methods against which to set practical experience with hospital records and upon which to build further training.

From this it is already possible to discern one channel through which a supply of suitable candidates may be forthcoming. I refer to the Institute of Hospital Administrators, whose examinations contain an optional paper in Statistical Methods. The questions posed at the first examinations held under the revised regulations in June, 1947, were among the best of their kind for the level of knowledge required. If, therefore, this early promise is maintained, then Mr. Cotton may find a supply of Hospital Administrators who have taken this optional paper because of a real liking for the subject, and who may provide suitable personnel for Medical Records Officers.

Dr. M. G. NEURDENBURG, M.O.H. and Statistician to the Municipal Medical and Health Department of Amsterdam (the Netherlands), in a written contribution welcomed the opportunity of commenting on Mr. Cotton's paper and giving parallel statistics of hospitalization in Amsterdam, a town of about 800,000 inhabitants.

The statistical division in which he worked had the great advantage of being an integrated part of the administration of a Health department which centralized about 70 per cent. of all hospital cases in the city, controlling them with regard to the medical necessity for their admission (co-operating with all agencies of social insurance, poor law, etc.), and moreover to a certain degree supervising their duration of stay.

The selection for entry therefore was performed, not by the separate hospitals themselves, but by one agency that had an up-to-date knowledge both of needs and of the available facilities. All cases were seen by the controlling doctors or discussed by them with the physicians applying for the patient's admission. The number of emergency cases was low, and in most cases there was time and opportunity for this contact as the distribution of the available beds was centralized in the same division.

Primarily owing to this selective control and secondly, perhaps, in agreement with Mr. Cotton's remarks, because less better-off patients need a somewhat prolonged stay before dismissal, the average duration of stay was slightly longer for the patients under control of the department than for the private patients. Moreover, the hospitalization of chronically ill persons was more often necessary for the poorer classes than for better-off people. As a result the percentage covered by the Medical and Health Department amounted, fairly constantly, to nearly 80 per cent. of all hospital days in Amsterdam.

The statistical division had now an experience of 22 years in collecting data on these hospital admissions, using a punch-card system (from 1926 to 1938 the results have been published yearly in the *Tijdschrift voor Sociale Geneeskunde*). A great improvement had been introduced in 1930 with the assistance of all the directors of the municipal and private hospitals co-operating in this hospitalization scheme. Since then the final diagnosis and the date of dismissal had been recorded confidentially on a simple numbered slip so that professional secrecy was fully safeguarded.

The coding from the slip was done by lay recorders under regular medical supervision.

For these later years, with the introduction of compulsory and voluntary prepayment-insurance, it had therefore been possible to use the same cards in three different ways: (*a*) With regard to the conditions of admission, (*b*) after dismissal, and (*c*) in relation to the pay-status of the patient.

In the years 1944–46 the sex ratio of admissions had been 140 women per 100 men, but as the female patients had an average stay of 32 days (the compulsorily insured only 28 days) and the men an average of 38 days (compulsorily insured 34 days), the sex ratio in days was only 119. Only 2·6 per cent. of the men and 5·5 per cent. of the women were hospitalized on part-pay basis, i.e. an excess over insured-basis covered privately; the days of stay of these cases averaged 20 days. As a rule the compulsory insurance covered hospitalization to a maximum of 42 days, voluntary insurance covering a longer term (to 120 days), or extending the rights of the compulsory insurance.

Under these conditions the number of applications for hospital admission per 1,000 inhabitants had been 38·9 in 1926 (births and some special smaller groups of patients excluded for reasons of comparability), 43·9 in 1930, 35·4 in 1935, 38·6 in 1938, 47·4 in 1942, slightly over 40 during the severest war-years 1944 and 1945, with their displacement of the population, and 43·1 in 1946.

In the early years 5 to 8 per cent. of the cases applying for admission were refused, while to-day this percentage had grown to some 10 per cent. through lack of hospital facilities, distinction being made between urgent cases and cases that might be put on the "waiting-list" (unfortunately very

CC-0. In Public Domain. Gurukul Kangri Collection, Haridwar

Digitized by Arya Samaj Foundation Chennai and eGangotri



long at the present time). Owing to these circumstances the proportion of cases in which the permit of hospitalization was not used had risen too, so that the relative number of actual admissions in 1946 was 82 per cent.

While he could not review in short space these data of 22 years of experience, Dr. Neurdenburg fully agreed with Mr. Cotton's introductory remarks and with his comments on the differences in hospitalization-rates, on days of hospitalization and on average duration of stay related to sex and age. He could also confirm Mr. Cotton's remarks on the principal difficulties arising from imperfection, inconsistency and lack of uniformity in terminology. Nevertheless, the experience in Amsterdam had shown that the operation of a recording system together with systematic inquiries in cases of inadequately recorded diagnoses led eventually to a great improvement even in the hospital practices themselves. The aetiology of injuries was purposely excluded from the Amsterdam statistics, for in relation to the treatment of these in the hospitals, nature and type of the injury were the relevant features.

The Amsterdam Medical and Health Department had devised a classification system, using the International List of Causes of Death but adapting it to practical demands in connection with the "planning" of the distribution of beds and the "structure" of the specific wards.

The basic form for the collection of the data was a type-written copy of the admission-permit; the statistical division therefore used the same material as the other administrative divisions—a feature with obvious advantages.

There were other special features of the mechanical treatment and tabulations made in Amsterdam which he thought were worthy of reference.

1. The punch-cards were dual cards and the coding was made, not on the slip, but on the punch-card itself, comparison between coded and punched data being possible at every stage of sorting and tabulating.

2. The code was devised in such a way that different items controlled one another; in adjacent columns the frequency of 0, 1, . . . 9's was more or less alternative, so that instead of complete verifying one could compare successive columns by sorting only.

3. No names of patients were used, but only two sets of numbers, i.e. the chronological number of the control-division and the number of the patient's enrolment in the hospital, these two independent numbers giving an excellent check when recording final diagnosis and pay-status.

4. During the stay of the patients in the hospitals the statistical division had an exact replica in punch-cards (a help on different occasions).

5. Comparisons could be made between diagnosis on admission and final diagnosis, and *vice versa*, showing the medical pitfalls. An example could be given for cases of gastric ulcer and appendicitis:

*Comparison of Diagnosis on Admission into Hospital with Final Diagnosis* (*and* vice versa).

| | 13 *Years of Experience*, 1933–1945 | *Gastric or Duodenal Ulcer* | | *Appendicits* | |
|---|---|---|---|---|---|
| | | *Number* | % | *Number* | % |
| a | Admission refused . . . . | 1,003 | 14 | 2,796 | 13 |
| b | Permit not used . . . . | 392 | 5 | 552 | 2 |
| c=d+e | Admitted into the hospitals . . | 7,345 | 100 | 22,411 | 100 |
| (a+b+c) | (Total number of applications) . | (8,740) | (119) | (25,759) | (115) |
| d | Dismissed with other diagnoses . | 1,669 | 23 | 4,675 | 21 |
| e | ,, ,, same diagnosis . | 5,676 | 77 | 17,766 | 79 |
| f | Cases with corresponding final diagnosis, but admitted under other first diagnoses . . . . | 4,337 | 59 | 1,389 | 6 |
| e+f | Total number of cases dismissed under same final diagnosis . . . | 10,013 | 136 | 19,155 | 85 |

6. By means of subsequent X-punching and by the use of the selectors of the tabulating machine it was possible to compare the actual number of days of stay with that covered by an insurance-scheme of 42 days (or any other period), and at the same time the number of cases was given for which the insurance-scheme was insufficient. About 21 to 24 per cent. of the patients had a stay of more than 42 days in the hospital, and the number of days after the 42nd day amounted to a figure of the order of 33 per cent. of the general total amount of days of stay. For 182 days these percentages were 1·5 per cent. and 5·5 per cent. only.

CC-0. In Public Domain. Gurukul Kangri Collection, Haridwar

Digitized by Arya Samaj Foundation Chennai and eGangotri



The basic set-up for this form of tabulation was rather intricate, but with the same design this comparison could be made for different diagnoses, for age-groups, for hospitals, etc.

7. Tabulating the cases per diagnosis according to the number of days of hospitalization under wiring to progressive subtotals, not only the average duration could be found, but also quite easily the median, the mode, and the mean between the lower and upper quartiles.

The collection of data on hospitalization for deliveries and of the number of live births connected therewith opened the way to compare these data with corresponding data from other sources. He had published the results from 1921 to 1946 in a special study ("Verloskundige hulp in een grote stad" (Obstetrical Help in a Large Town), *Tijdschrift voor Sociale Geneeskunde*, May 23, 1947).

The hospitalization for deliveries had risen from 18·8 per cent. to 45·0 per cent. in 1942, but had fallen to 35·5 per cent. in 1945 and 1946. The percentage of cases admitted via the Medical and Health Department had been about 13 per cent. in 1926/8, at its maximum in 1938 (22·7 per cent.) and in recent years about 10 to 12 per cent. (as percentage of all Amsterdam births). This indicated that the tendency for hospitalization for deliveries had been much stronger in the "private" and full-pay groups than in the sphere of the Medical and Health Department, but normal delivery is not an indication for hospitalization under the present insurance-schemes.

Dr. Neurdenburg hoped that this brief description of the Amsterdam system and some of its results would contribute to the world-wide comparison of such interesting data as hospital statistics. He would be glad to give fuller information to any inquirer.

Mr. COTTON, in reply: I am most grateful to the contributors to the discussion. The points raised are all important, and I hope no one will assume that if I do not treat all of them at the same length I do not value them equally highly. Of one thing in particular I feel reassured, namely, that the time was ripe for the discussion of this subject.

Professor Greenwood has reproved me for what he considered to be a joke on a serious matter. I would assure him that no such levity was intended. In case this should call down upon my head still stronger criticism, I should at once confess that it was a mistake to employ the word "matched" when speaking of the comparison of results of surgical operations. My point, to which I still hold, was that careful follow-up records of patients operated upon for major conditions, if kept on agreed lines, would permit of comparisons which at present cannot be obtained. The thought that hospital records compiled on a nationally uniform system might ever be used to glorify or disparage individuals is as abhorrent to me as it is to Professor Greenwood, and I therefore hasten to acquit myself of any such intention.

I agree wholeheartedly with Professor Bradford Hill that *ad hoc* inquiries applied over limited numbers of hospitals and carried on for limited periods offer the most hopeful line of approach to such specific problems as the results of different forms of treatment, the comparison of different surgical procedures, and so on. I share his view that general statistics, routinely collected, are not going to provide answers to such difficult questions. The prospect of drafting an omnibus questionnaire to include all the possible questions which might arise would daunt the boldest investigator. Moreover, the validity of the conclusions would not, I think, be increased materially if data on such specific problems were collected on a censal or other sample basis. On Professor Bradford Hill's point regarding the possible usefulness of hospital statistics in the public health and epidemiological fields, I would likewise concede that sufficient data for practical purposes might be obtainable by sampling methods, but there is here, I think, a point worth attention. It is that the initiation of *ad hoc* inquiries is not always a simple matter; there is a "drill" to be followed and the co-operation of many persons must be obtained. These things have to be done afresh for each inquiry. If, as I have suggested, the basic data on hospitalized illness, e.g., diagnosis, age, sex, duration of stay, seasonal occurrence, etc., were routinely recorded by methods which would become semi-automatic and would certainly not be time-consuming on the part of trained staffs, the *ad hoc* investigator would have the benefit of this work and could obtain source-material without having to go through the preliminaries which I have mentioned. It may be argued that to store such a mass of basic material on the offchance that it might be useful to future investigations is uneconomical; my own belief is that the existence of such a store would encourage inquiries which, although they are necessary, are not at present undertaken because of the physical difficulties facing those who would like to essay them.

Mr. Benjamin agrees that the analysis of hospital records is essential in the interests of medical administration, teaching and research, but questions (as indeed did Professor Greenwood and Professor Bradford Hill) the value of hospital records as a source of information on morbidity. Personally, I cannot accept the suggestion that hospital statistics are of such little value in this connection. If I may over-simplify to make my point, the sickness of the nation comprises that

CC-0. In Public Domain. Gurukul Kangri Collection, Haridwar

Digitized by Arya Samaj Foundation Chennai and eGangotri



which is treated in hospital and that which is not so treated. That there are overlappings between these two kinds of sickness is not disputed. But it is surely reasonable to argue that knowledge of either type is useful knowledge, shedding light on the problem of sickness as a whole. The fact that incomparably the greater volume of sickness is not hospitalized does not make data on hospitalized sickness less valuable. It does, of course, impose heavy restrictions on those who would draw conclusions from hospital data, and these restrictions may be such that every pronouncement based on hospital data must be hedged about with caveats and reservations. It seems to me that, in dismissing hospital statistics as of little public health value, Mr. Benjamin has committed himself too far, and that what he means is that our present techniques of analysis and comparison do not at present enable us to utilize hospital statistics for public health purposes to any considerable extent. I hope he will forgive me, therefore, if I stick to my opinion that hospital statistics can illuminate morbidity problems. I have never claimed that the light will be radiant. My present argument is that we should first assemble the available material and persevere in the search for techniques for its use. I cannot accept the argument that we should, by taking thought, try to decide how we would use hospital data if we had it, and then begin to collect material on which to test the methods which have occurred to us.

On one point I am in complete accord with Mr. Benjamin, namely, the immense value of the information on health and sickness possessed by general practitioners. Perhaps, if it can be demonstrated that hospital records can be analysed and used efficiently at low cost and no undue expenditure of man-power, the general practitioner himself might be so impressed that he would even volunteer to contribute from his knowledge to the common pool of morbidity data.

I find much to agree with in the remarks of Mr. Heady and Mr. Sutherland, particularly the latter's observation on the absurdity of supposing that morbidity statistics could immediately attain the reliability which mortality statistics have taken over a century to reach.

Mr. Maddex stressed the importance of knowing in appropriate detail the population at risk, and emphasized that hospital treatment was only an intermediate stage in a certain proportion of illnesses. His point that hospital material should be linked up with pre-admission and post-discharge data obviously cannot be gainsaid, and it is one which is much in my mind. I was anxious, however, to deal with my subject rather narrowly, because I wished to concentrate attention initially upon the hospitals' own part. We have to make a start somewhere with this problem, and it appeared to me that the hospital itself was an appropriate starting-point. Once establish in hospitals the custom of recording in suitable form data for subsequent analysis, and the extension of the practice to those agencies which deal with the patient before and afterwards is a natural process.

On the question of my overstatement of the number of National Insurance claims, I should like to explain that I was anxious to avoid the error into which I actually fell. In the 7th paragraph of my paper I said: "As to the insurance schemes, it has been estimated that 1,000,000 claims a week for sickness benefit by persons over 15 years old may arise." This was, I regret to say, not an exact statement of the information which had been given to me, which was that it was assumed that 1,000,000 persons per week would be in receipt of sickness benefit. On the basis of weekly certificates this would, of course, mean 1,000,000 "sickness documents" a week, and it was this number of documents to which I intended to draw attention. If the lodging of a certificate is a claim for benefit for the ensuing week I was right in my statement, but I do not stand on this interpretation. I did not intend to say that there would be 1,000,000 new claims per week, and I am sorry that by inexact phraseology such an impression was given.

On Mr. Maddex's further point, namely, the paucity of reference in my paper to the work of others (and particularly the Department of Health for Scotland), I can only say that I am far from underrating the value of this work, and had I not felt it necessary to condense my paper so as to focus attention on hospital records in particular, I should certainly have cited the analyses he mentioned.

Mr. Mandeville spoke of the desirability of incorporating microprints of original documents in tabulating cards. This prospect is, happily, not so distant as Mr. Mandeville thought. I am, at the time of writing, investigating a method (originated in the U.S.A.) of incorporating one or more frames of microfilm in tabulating cards, and I hope that some practical demonstration of the method in this country will soon be available. As to the need for easy and rapid reference to actual case-notes, I should like to assure Mr. Mandeville that this is more or less my daily preoccupation. A considerable part of my work consists of advising hospitals on internal record-keeping, and it is not too much to say that facility of access is the principle which governs all the schemes which I have the honour to propound.

Mr. Buckland mentions the Findex system. I am acquainted with this system, as also with the Copeland Chatterson Paramount system and other manual and semi-manual sorting systems. I am glad Mr. Buckland raised the point, for it would be a pity if small hospitals and (within

CC-0. In Public Domain. Gurukul Kangri Collection, Haridwar

Digitized by Arya Samaj Foundation Chennai and eGangotri



hospitals) small departments should think that the analysis of data is impossible without costly mechanical or electrical equipment. The manually-operated sorting systems are highly suitable for many tasks, and their possibilities are not sufficiently known to hospital doctors and administrators.

Regarding personnel and training problems, I may perhaps take this occasion to say that an Association of Medical Records Officers has recently been formed, one of the objectives of which is the provision of training facilities. The Institute of Hospital Administrators was consulted when the Association was in process of formation. When Mr. Buckland suggests that hospital administrators who possess a real liking for statistical and record work would make good medical records officers, he finds me in full agreement.

Dr. Neurdenburg's contribution was most welcome, and I have since had the pleasure of meeting him personally to discuss it. A point which I noted specially was that the coding of the Amsterdam data was done by lay recorders under regular medical supervision. I took up this point with Dr. Neurdenburg when we met, and assured myself of our complete identity of view. Readers of my paper will observe that I laid special stress upon the practicability of medical coding by lay persons.

The discussion, and the conversations and correspondence which I have had since the paper was read, left me with these impressions:

1. That the paper, with all its imperfections, was timely.
2. That there is still a tendency on the part of many people to refute arguments which I have not employed and to deny claims which I have not made for hospital statistics. I have tried to guard against claiming that hospital statistics and morbidity statistics are synonymous. All I actually claim is that hospital statistics must have a place in any scheme for the compilation of general morbidity statistics.
3. Admitting the limited value of hospital data as even a partial index to morbidity, the fraction of knowledge which remains in them is, I suggest, useful and infinitely preferable to ignorance.
4. The endeavour to encourage (*a*) good original notes in hospitals, (*b*) good techniques of classification and analysis, and (*c*) the use of hospital records for research into specific problems is a worthwhile occupation.

As a result of the ballot taken during the meeting, the candidates named below were elected Fellows of the Society:

Frank Benson.
Alexander Markham Bothwell.
Vinay Kumar Chopra.
Philip Anthony Collier.
Cubitt Wallace Colman.
Esmé Ducker.
Lionel Edgar Griffith.
David Feldman
William Bell Fletcher.
Lefkes P. Georgiades.
Woodthorp Jude Harrison.
Denis John Halliday.
David Malcolm John Higgs.
Hubert Cecil Holding.
Ronald George Hooker.
Margaret Josephine Kadesh.
Henry Oliver Lancaster.
Dennis Victor Lindley.
Thomas Joseph Lunt.
James Williamson Mather.
Diana Elizabeth Tudway Mullings.
Sidney Alan Penman.
Harold Rifkin.
Bernard Burrows Swann.
Jan Uchytil.
Arnold Martyn Whitehouse.
Betty Ruth Williams.
William John Worsdale.
Reginald Kenneth Wright.

*Corporate Representatives*

Hilda M. Robins, *representing* The Hulton Press, Ltd.

Eric Hubert Steiner, *representing* The British Food Manufacturing Industries Research Association.

CC-0. In Public Domain. Gurukul Kangri Collection, Haridwar

Digitized by Arya Samaj Foundation Chennai and eGangotri



# MISCELLANEA

## CONTENTS

PAGE

On the Distribution in Time of the Births in Successive Generations. By P. H. Leslie . . 44

A New Regression Analyser. By Guy H. Orcutt . . . . . 54

## On the Distribution in Time of the Births in Successive Generations

By P. H. Leslie

(Bureau of Animal Population, Department of Zoological Field Studies, Oxford)

A familiar type of problem which arises both in population analysis and in questions of industrial replacement is that of determining the distribution in time of the yearly births, or of new articles required, in successive generations. These closely-related aspects of the same problem have been very fully investigated by Lotka in a number of papers (e.g. 1928, 1929, 1939, 1942), in which he has discussed not only the special case when the initial population, or zero generation, consists of a group of individuals all born at the same time, but also the more important general case when the initial population has some given age distribution. Recently Bartlett (1946) in a series of lectures on stochastic processes has dealt with the same problem in the case of industrial replacement, making use of matrices and vectors in the mathematical development. However, in the example which he gives the zero generation is taken to be a group of new articles all "born" at the same time, and so far as the present writer is aware there has been no discussion in these mathematical terms of the perfectly general case when the initial age distribution of the population is entirely arbitrary. Although the following development adds nothing essentially new to the theory of self-renewing aggregates, the solution of this general problem in terms of matrices leads to a certain simplicity in the results which may be of use in the actual computations for a given series of data.

If at some origin of time we have an entirely arbitrary age distribution of individuals, and if we define the offspring which are born to these individuals as the first generation, their offspring in turn as the second generation, and so on, we require to know the numbers of births in each generation which might be expected during successive intervals of time, assuming that some given age-schedules of fertility and mortality remain constant. In terms of industrial replacement, of course, the definitions are appropriately altered, the wearing out of an article being regarded as a death and its replacement by a new article as a birth. In both cases it is only necessary to consider the span of ages until reproduction or replacement ceases. Thus in a biological population we shall consider only the pre-reproductive and reproductive age groups.

The age distribution $\{n_{0,t}\, n_{1,t} \ldots n_{k,t}\}$, consisting of the $n_{x,t}$ individuals alive aged $x$ to $x+1$ in a population at time $t$, will be written as the column vector $\xi(t)$, different age distributions being defined by different subscripts. Following the development which has been previously given (Leslie, 1945, 1948), it will be assumed that associated with every vector $\xi_y$ there is a uniquely determined vector $\eta_y$, which in matrix notation is written as a row vector, the square of the length of the vector $\xi_y$ being given by the scalar product $\eta_y\xi_y$. Then, if in the case of a biological population we as usual work in terms of the female population and, adopting the same unit of age and time, we put—

$P_x\ (x = 0, 1, 2, \ldots k-1)$ = the probability that a female aged $x$ to $x+1$ at time $t$ will be alive in the age group $x+1$ to $x+2$ at time $t+1$,

$F_x\ (x = 0, 1, 2, \ldots k)$ = the number of daughters born in the interval $t$ to $t+1$ per female alive aged $x$ to $x+1$ at time $t$, who will be alive in the age group $0-1$ at time $t+1$,

the age distribution of the population at time $t$, assuming the constancy of these rates, is given by

$$\xi(t) = A^t\xi(0),$$

CC-0. In Public Domain. Gurukul Kangri Collection, Haridwar

Digitized by Arya Samaj Foundation Chennai and eGangotri



where the matrix

$$A = \begin{bmatrix} F_0 & F_1 & F_2 & \cdots & F_{k-1} & F_k \\ P_0 & . & . & \cdots & . & . \\ . & P_1 & . & \cdots & . & . \\ \cdots & \cdots & \cdots & \cdots & \cdots & \cdots \\ . & . & . & \cdots & P_{k-1} & . \end{bmatrix} \quad \begin{matrix} F_x \geqslant 0, \\ 0 < P_x < 1. \end{matrix}$$

If the problem of industrial replacement is being considered, we may define $P_x$ as the probability that an article in use aged $x$ to $x + 1$ at time $t$ will be still in use aged $x + 1$ to $x + 2$ at time $t + 1$. Then, since it is generally assumed for the sake of simplicity that an article which wears out is immediately replaced by a new one, the $F_x$ figures become $1 - P_x$ for $x = 0, 1, 2 \ldots k - 1$, and $F_k = 1$.

The numerical values of these matrix elements will usually be derived from data given in the form of a life table and a table of age specific fertility rates, and for some suggested methods of calculation reference may be made to an earlier publication (Leslie, 1945). Thus, it is convenient to put $P_x = L_{x+1}/L_x$, where $L_x$ is the integral between the ages $x$ to $x+1$ of the life table $l_x$ curve. This method of computing the survivors in one unit's time would be exact if we were dealing with a stationary population and the appropriate stable form of distribution. But, in general, the types of age distribution which will arise in practice, more particularly when the inherent rate of increase of the population is high, will depart very widely from this form, and thus some degree of error might be expected from the use of $P_x$ figures based on the life table age distribution. Similar objections arise in the case of the $F_x$ figures. In practice, however, it was found that the error appeared to be very slight provided that the unit of age and time adopted was not too coarse compared with the age span of the species considered. A numerical example of the results obtained in using such a matrix has already been given in the case of a population with a high relative rate of increase (Leslie, 1945).

There are two transformations of this system which are of importance in the theoretical development. If we pass to a new frame of reference and the variables $\eta$ and $\xi$ undergo the non-singular linear transformations,

$$\eta = \varphi H, \quad \xi = \mathrm{H}^{-1}\psi,$$

where $H$ is taken as the diagonal matrix

$$H = \begin{bmatrix} (P_0P_1P_2 \ldots P_{k-1}) & . & . & \cdots & . & . \\ . & (P_1P_2P_3 \ldots P_{k-1}) & . & \cdots & . & . \\ . & . & (P_2P_3 \ldots P_{k-1}) & \cdots & . & . \\ \cdots & \cdots & \cdots & \cdots & \cdots & \cdots \\ . & . & . & \cdots & (P_{k-2}\,P_{k-1}) & . \\ . & . & . & \cdots & P_{k-1} & . \\ . & . & . & \cdots & . & 1 \end{bmatrix},$$

the matrix $B = \mathrm{HAH}^{-1}$, which operating on the vector $\psi_y$ in the new frame of reference is equivalent to the matrix $A$ operating on the vector $\xi_y = \mathrm{H}^{-1}\psi_y$ in the original frame, is

$$B = \begin{bmatrix} f_0 & f_1 & f_2 & \ldots & f_{k-1} & f_k \\ 1 & . & . & \ldots & . & . \\ . & 1 & . & \ldots & . & . \\ . & . & 1 & \ldots & . & . \\ . & . & . & \ldots & 1 & . \end{bmatrix},$$

where $f_x = (P_0P_1P_2 \ldots P_{x-1})F_x$.

It will be seen that the matrices $A$ and $B$ have the same characteristic equation—

$$| A - \lambda \mathrm{I} | = | B - \lambda \mathrm{I} | = 0,$$

CC-0. In Public Domain. Gurukul Kangri Collection, Haridwar

Digitized by Arya Samaj Foundation Chennai and eGangotri



and therefore the same latent roots. This equation, when expanded in powers of $\lambda$, is

$$\lambda^{k+1} - (\sum_{x=0}^{k} f_x \lambda^{k-x}) = 0, \quad . \quad . \quad . \quad . \quad . \quad . \quad (1)$$

and since $f_x \geqslant 0$ and there is only one change of sign, only one of the roots will be real and positive. In the more usual type of matrix which will be met with in population mathematics, this root $\lambda_1$ is dominant,

$$|\lambda_1| > |\lambda_2| > \ldots\ldots > |\lambda_{k+1}|,$$

the remaining roots being negative or complex. In the following discussion we will assume for simplicity that all the latent roots of the matrix are distinct.

Associated with each distinct latent root $\lambda_a$ of the matrix $B$ there is a pair of stable vectors, $\psi_a$ and $\varphi_a$, which have the properties

$$B\psi_a = \lambda_a\psi_a, \quad \varphi_a B = \lambda_a\varphi_a,$$

and by a suitable choice of scale these vectors may be normalized. The normalized stable $\psi_a$ form a set of $k+1$ independent and mutually orthogonal vectors of unit length,

$$\varphi_b\psi_a \begin{cases} = 1 \ (a = b) \\ = 0 \ (a \neq b) \end{cases}$$

and in the case of any arbitiary $\psi_y$ we have

$$\psi_y = c_1\psi_1 + c_2\psi_2 + \ldots\ldots + c_{k+1}\psi_{k+1},$$

where the coefficients $c_a$ may be either real or complex. Hence by transforming back to the original co-ordinate system and putting $\xi = H^{-1}\psi$, any arbitrary $\xi_y$ can be expanded in terms of the stable $\xi_a$.

Finally, we may construct from the normalized stable $\psi_a$ and $\varphi_a$ the matrices

$$Q = [\psi_1 \ \psi_2 \ldots\ldots \psi_{k+1}],$$

$$U = \begin{bmatrix} \varphi_1 \\ \varphi_2 \\ \cdot \\ \cdot \\ \cdot \\ \varphi_{k+1} \end{bmatrix},$$

which have the properties,

$$UQ = I; \ UBQ = C; \ U\psi_y = c_y \quad . \quad . \quad . \quad . \quad . \quad (2)$$

where $C$ is a diagonal matrix consisting of the latent roots of $B$, and $c_y$ a column vector consisting of the coefficients $c_a$ in the expansion of $\psi_y$ in terms of the stable $\psi_a$.

It is useful for the purposes of the argument which is developed later to define the elements of a pair of associated stable vectors in explicit terms. It may be shown that a stable $\varphi_a$ or $\psi_a$ vector associated with the latent root $\lambda_a$ of the matrix $B$ can be taken proportional to any row or any column respectively of the adjoint matrix

$$F(\lambda_a) = \prod_{b \neq a} [B - \lambda_b I].$$

In the case of a matrix such as $B$, which, as defined here, has only zero elements below and to the left of a principal sub-diagonal consisting of units, the adjoint matrix $F(\lambda_a)$ can be regarded as the matrix product $\psi_a^*\varphi_a^*$ of the two vectors (writing a row vector with square brackets and a column vector with curly brackets).

$$\psi_a^* = \{\lambda_a^k, \ \lambda_a^{k-1}, \ \lambda_a^{k-2}, \ldots\ldots\ldots\ldots \lambda_a, \ 1\}$$

$$\varphi_a^* = [\sum_{x=0}^{k} f_x\lambda_a^{-(x+1)}, \ \sum_{x=1}^{k} f_x\lambda_a^{-x}, \ \sum_{x=2}^{k} f_x\lambda_a^{-(x-1)}, \ldots\ldots\ldots f_k\lambda_a^{-1}] \quad . \quad . \quad (3)$$

CC-0. In Public Domain. Gurukul Kangri Collection, Haridwar

Digitized by Arya Samaj Foundation Chennai and eGangotri



the first element of $\varphi_a^*$ being equal to unity from (1). The scalar product of these two vectors is the trace of $F(\lambda_a)$,

$$\varphi_a^* \psi_a^* = \frac{df(\lambda_a)}{d\lambda_a} = z^2, \text{ say,}$$

where the right-hand side is the characteristic equation of $B$ differentiated with respect to $\lambda$. If each vector is divided by the scalar $|z|$, then

$$\frac{\varphi_a^*}{|z|} \cdot \frac{\psi_a^*}{|z|} = \varphi_a \psi_a = 1.$$

The transformation $\eta = \varphi H$, $\xi = H^{-1}\psi$, $B = HAH^{-1}$ has a number of advantages from the computational point of view, and among these one of particular interest in the solution of the present problem, which has been pointed out by Bartlett (1946). If at some time $t$ there is an arbitrary age distribution $\xi(t)$, then

$$\psi(t) = H\xi(t) = \begin{bmatrix} (P_0P_1P_2 \ldots P_{k-1})\, n_{0,t} \\ (P_1P_2 \ldots P_{k-1})\, n_{1,t} \\ (P_2 \ldots P_{k-1})\, n_{2,t} \\ \cdot \\ \cdot \\ \cdot \\ \cdot \\ \cdot \\ P_{k-1}\, n_{k-1,t} \\ n_{k,t} \end{bmatrix} = (P_0P_1P_2 \ldots P_{k-1}) \begin{bmatrix} n_{0,t} \\ n_{0,t-1} \\ n_{0,t-2} \\ \cdot \\ \cdot \\ \cdot \\ \cdot \\ \cdot \\ n_{0,t-k+1} \\ n_{0,t-k} \end{bmatrix}.$$

By operating on $\psi(t)$ with the matrix $B$, we have therefore

$$n_{0,t+1} = \sum_{x=0}^{k} f_x n_{0,t-x} \quad . \quad . \quad . \quad . \quad . \quad . \quad (4)$$

an expression which relates the numbers in the first age group at time $t+1$ with the number of individuals in the same age group at times $t$, $t-1$, $t-2$, . . . $t-k$. Essentially this is the same thing as relating the number of births $B_t$ which occur during the interval $t$ to $t+1$ with those which have occurred during the previous intervals. For the $n_{0,t+1}$ individuals alive aged $0-1$ at time $t+1$ are the survivors of those born during the period $t$ to $t+1$ and we have approximately $L_0 B_t = n_{0,t+1}$, where $L_0 = \int_0^1 l_x\, dx$.

Since the numbers alive in the first age group of a population at some particular time are thus directly proportional to the number of births which have occurred during the preceding intervals, any actual calculations may be carried out in terms of the $n_{0,t}$ and this course is followed here. (It is assumed that a sufficiently fine time interval is employed for this relationship between $B_t$ and $n_{0,t+1}$ to be true approximately.)

There is one further extension of equation (4) which is of importance. The number of young born during an interval of time $t$ to $t+1$ to the females of the $j^{\text{th}}$ generation which have an age distribution $\xi(t)$ will be the survivors in the first age group of the $(j+1)^{\text{th}}$ generation at time $t+1$, and therefore

$$n_{0,t+1}(j+1) = \sum_{x=0}^{k} f_x n_{0,t-x}(j), \ (j = 1, 2, 3 \ldots\ldots) \quad . \quad . \quad . \quad . \quad (5)$$

If, then, we can determine the distribution of the $n_{0,t}$ for the first generation at times $t = 1, 2, 3 \ldots$, etc., the distributions of the succeeding generations may be easily determined by means of (5).

CC-0. In Public Domain. Gurukul Kangri Collection, Haridwar

Digitized by Arya Samaj Foundation Chennai and eGangotri



Suppose we consider at some origin of time a stable $\xi$ appropriate to a latent root of the matrix $A$, for example

$$\xi_a^* = H^{-1}\psi_a^* = \{(P_0P_1P_2 \ldots P_{k-1})^{-1}\lambda_a^k, (P_1P_2P_3 \ldots P_{k-1})^{-1}\lambda_a^{k-1}, \ldots P_{k-1}^{-1}\lambda_a, 1\},$$

which will be taken as the zero generation. (Actually, of course, only one such $\xi_a^*$ will consist of real positive elements, since the matrix $A$ has only one real positive root. But, from the mathematical point of view, there is little difficulty in contemplating age distributions consisting of complex or negative individuals.) Then by operating on this vector with the matrix $A$ and at each step separating the members of the first generation from the survivors of the zero generation, the $n_{0,t}$ of the first generation at times $t = 1, 2, 3 \ldots$ will be found to be

| $t$ | $n_{0,t}\ (j=1)$ |
|---|---|
| 1 | $h\lambda_a^{k+1}\sum_{x=0}^{k} f_x\lambda_a^{-(x+1)}$ |
| 2 | $h\lambda_a^{k+1}\sum_{x=1}^{k} f_x\lambda_a^{-x}$ |
| 3 | $h\lambda_a^{k+1}\sum_{x=2}^{k} f_x\lambda_a^{-(x-1)}$ |
| . | . |
| . | . |
| . | . |
| . | . |
| . | . |
| . | . |
| $k$ | $h\lambda_a^{k+1}\sum_{x=k-1}^{k} f_x\lambda_a^{-(x-k+2)}$ |
| $k+1$ | $h\lambda_a^{k+1}(f_k\lambda_a^{-1})$ |

where the scalar $h = (P_0P_1P_2 \ldots P_{k-1})^{-1}$.

Comparing this series of values with (3) it will be seen that for a zero generation with an age distribution $\xi_a^*$ the number of the first generation alive in the first age group at times $t = 1, 2, 3 \ldots k+1$ is given by a multiple of the $t^{\text{th}}$ element of the row vector $\varphi_a^*$. If, then, we define the $n_{o,t}$ for the first generation as the column vector $\chi$, we have for a normalized stable vector $\xi_a$ at $t = 0$,

$$\chi_a = h\lambda_a^{k+1}\varphi'_a.$$

Since any arbitrary age distribution $\xi_y$ of the zero generation can be expressed in terms of the stable $\xi_a$,

$$\xi_y = c_1\xi_1 + c_2\xi_2 + \ldots\ldots + c_{k+1}\xi_{k+1}.$$

we have

$$\chi_y = h\sum_{a=1}^{k+1} c_a\lambda_a^{k+1}\varphi'_a,$$

or making use of the matrices $U$, $Q$ and $C$ defined by (2),

$$\chi_y = h\,U'\,C^{k+1}\,c_y,$$

where $c_y$ is a column vector consisting of the coefficients $c_a$. Then, since the expansion of $\xi_y$ in terms of the stable $\xi_a$ may be written

$$\xi_y = H^{-1}Q\,c_y,$$

CC-0. In Public Domain. Gurukul Kangri Collection, Haridwar

Digitized by Arya Samaj Foundation Chennai and eGangotri



we have finally

$$\begin{aligned} \chi_y &= h\, U'\, C^{k+1}\, UH\xi_y \\ &= h\, U'\, U\, B^{k+1}\, H\xi_y \qquad \ldots\ldots\ldots \quad (6) \\ &= T\, \xi_y, \text{ say.} \end{aligned}$$

From the practical point of view the usefulness of this relationship will depend on whether the matrix $S = U'\, U\, B^{k+1}$ can be determined easily for any given series of data. For the matrix $U$ cannot be constructed unless the values of all the latent roots of $B$ are known, and unless the latter is of small order (say $<7 \times 7$), this is hardly practicable, except at the cost of extremely lengthy and tedious calculations. It appears, however, that the matrix $S$ is of a very simple form as may be inferred from the following alternative development.

If, instead of expanding an arbitrary $\xi_y$ in terms of the stable $\xi_a$, we introduce into the vector space of the $\xi$'s a system of reference axes defined by the unit column vectors

$$\begin{aligned} \varepsilon_0 &= \{1 \quad 0 \quad 0 \quad \ldots\ldots \quad 0\} \\ \varepsilon_1 &= \{0 \quad 1 \quad 0 \quad \ldots\ldots \quad 0\} \\ \varepsilon_2 &= \{0 \quad 0 \quad 1 \quad \ldots\ldots \quad 0\} \\ &\vdots \\ \varepsilon_k &= \{0 \quad 0 \quad 0 \quad \ldots\ldots \quad 1\} \end{aligned}$$

the vector

$$\xi_y = \sum_{x=0}^{k} n_x\, \varepsilon_x,$$

and

$$\psi_y = H\xi_y = \Sigma\, n_x\, H\varepsilon_x.$$

Then by operating on the $\psi$-type vectors $H\varepsilon_x$ with the matrix $B$ in order to determine the individual $\chi_x$, and remembering that the first element of a $\psi$ vector is $(P_0P_1P_2 \ldots P_{k-1})$ times the first element of a $\xi$ vector, we have

$$(P_0P_1P_2 \ldots P_{k-1})\chi_y = n_0 (P_0P_1P_2 \ldots P_{k-1}) \begin{bmatrix} f_0 \\ f_1 \\ f_2 \\ \cdot \\ \cdot \\ \cdot \\ \cdot \\ f_k \end{bmatrix} + n_1 (P_1P_2P_3 \ldots P_{k-1}) \begin{bmatrix} f_1 \\ f_2 \\ f_3 \\ \cdot \\ \cdot \\ \cdot \\ f_k \\ 0 \end{bmatrix}$$

$$+ n_2 (P_2P_3 \ldots P_{k-1}) \begin{bmatrix} f_2 \\ f_3 \\ \cdot \\ \cdot \\ \cdot \\ \cdot \\ \cdot \\ f_k \\ 0 \\ 0 \end{bmatrix} + \ldots\ldots\ldots\ldots + n_k \begin{bmatrix} f_k \\ 0 \\ 0 \\ \cdot \\ \cdot \\ \cdot \\ \cdot \\ \cdot \\ 0 \\ 0 \end{bmatrix}$$



CC-0. In Public Domain. Gurukul Kangri Collection, Haridwar

Digitized by Arya Samaj Foundation Chennai and eGangotri



or

$$\chi_y = h \cdot \begin{bmatrix} f_0 & f_1 & f_2 & \cdots & f_k \\ f_1 & f_2 & f_3 & \cdots & 0 \\ f_2 & f_3 & f_4 & \cdots & 0 \\ \cdot & \cdot & \cdot & & \cdot \\ \cdot & \cdot & \cdot & & \cdot \\ \cdot & \cdot & \cdot & & \cdot \\ \cdot & \cdot & \cdot & & \cdot \\ \cdot & \cdot & \cdot & & \cdot \\ \cdot & \cdot & f_k & \cdots & 0 \\ \cdot & f_k & 0 & \cdots & 0 \\ f_k & 0 & 0 & \cdots & 0 \end{bmatrix} \cdot H\xi_y = hSH\xi_y \quad . \quad . \quad . \quad (7)$$

Comparing this with equations (6) it will be seen that $S = U'U\,B^{k+1}$ is a symmetrical matrix whose elements consist of the $f_x$ figures from the first row of $B$ arranged as shown. Although it is now easy to construct the matrix $T = hSH$, which, operating on an age distribution $\xi_y$, gives the values of $\chi_y$ directly, it is probably best for the purpose of any actual computations to leave the expression for $\chi_y$ in the above form (7). In practice it may be easier first of all to transform the vector $\xi_y$ by premultiplication with the matrix $H$ and then to operate on the resulting $\psi_y$ with $hS$. When the elements of $\chi_y$ have been thus determined, the $n_{0,t}$ for the second and subsequent generations can be found by repeated use of (5).

It will be noticed that since

$$h = (P_0P_1P_2 \ . \ . \ . \ P_{k-1})^{-1} = L_0/L_k,$$

where $L_k = \int_k^{k+1} l_x\,dx$ for the last age group of the life table age distribution during which reproduction occurs, and since the number of births which occur during the interval of time $t-1$ to $t$ is given by $L_0^{-1}\,n_{0,t}$, the distribution of actual births, if it is required instead of the $n_{0,t}$ for the first generation, may be obtained by replacing $h$ in (7) by the scalar $L_k^{-1}$.

It may be of interest on occasion to consider merely the total number of births which might be expected in successive generations given the zero generation age distribution $\xi_y$ and the matrix $A$. Working in terms of the $n_{0,t}$, the total number in the first generation will be found by premultiplying the vector $\chi_y$ by a row vector of units. Performing this operation on the right-hand side of (7), this will be equivalent to determining the scalar $\eta_s\,\xi_y$, where $\eta_s$ is a row vector of which the $i^{\text{th}}$ element is

$$\frac{\sum_{x=i-1}^{k} L_x F_x}{L_{i-1}}, \quad (i = 1, 2, \ . \ . \ . \ k+1).$$

This is the same row vector to which attention has been drawn in a previous communication (Leslie, 1948: §3), though without giving an example of its practical applications. It is a multiple of the normalized row vector $\eta_1$ associated with the dominant latent root $\lambda_1 = 1$ of the matrix for a stationary population, which would be obtained by dividing each element in the first row of the original matrix $A$ by the net reproduction rate ($R_0 = \sum_0^k f_x$). In the present instance, however, the elements of this vector provide a measure of the relative contribution made to the births in the first generation by each individual alive in the corresponding age group of the initial population. If then the total number of $n_{0,t}$ ($= N_1$, say) for the first generation have been determined in this way, the total number in the $j^{\text{th}}$ generation is given by

$$N_j = N_1 R_0^{j-1}.$$

Finally there is the question of the type of distribution to which the births in each generation will tend after a large number of generations. As is well known from the work of Lotka (e.g. 1928, 1939) the distribution in time of the births in the $j^{\text{th}}$ generation approaches normality with

CC-0. In Public Domain. Gurukul Kangri Collection, Haridwar

Digitized by Arya Samaj Foundation Chennai and eGangotri



increasing $j$. It is also useful to have an expression defining the cumulants of the $j^{th}$ generation. Following Bartlett (1946) we may form the moment generating function $M(\theta)$ of both sides of equation (5), viz.

$$M_{j+1}(\theta) = M_f(\theta)\, M_j(\theta);$$

whence

$$M_j(\theta) = M_f{}^{j-1}(\theta)\, M_1(\theta),$$

where $M_f(\theta)$ is the moment generating function of the $f_x$ figures and $M_1(\theta)$ that of the first generation young. Hence the cumulant generating function of the $j^{th}$ generation

$$K_j(\theta) = (j-1)\, K_f(\theta) + K_1(\theta),$$

which will tend to normality with increasing $j$.

*Numerical Example*

Suppose we consider a very simple system for which the life table age distribution is given by the $L_x$ values {0·9, 0·7, 0·5, 0·3}, and let the matrix

$$A = \begin{bmatrix} 0 & 45/7 & 18 & 18 \\ 7/9 & 0 & 0 & 0 \\ 0 & 5/7 & 0 & 0 \\ 0 & 0 & 3/5 & 0 \end{bmatrix}.$$

Then,

$$H = \begin{bmatrix} 1/3 & 0 & 0 & 0 \\ 0 & 3/7 & 0 & 0 \\ 0 & 0 & 3/5 & 0 \\ 0 & 0 & 0 & 1 \end{bmatrix},$$

and

$$HAH^{-1} = B = \begin{bmatrix} 0 & 5 & 10 & 6 \\ 1 & 0 & 0 & 0 \\ 0 & 1 & 0 & 0 \\ 0 & 0 & 1 & 0 \end{bmatrix},$$

the latent roots being $\lambda_1 = 3$: $\lambda_2, \lambda_3 = -1 \pm i$: $\lambda_4 = -1$.

In order to illustrate the formal development by means of equations (6), the matrix $U$, consisting of the normalized stable $\varphi_a$, may be written

$$U = \begin{bmatrix} \frac{1}{68^{1/2}} & \frac{3}{68^{1/2}} & \frac{4}{68^{1/2}} & \frac{2}{68^{1/2}} \\ \frac{1}{(8-2i)^{1/2}} & \frac{-1+i}{(8-2i)^{1/2}} & \frac{-5-2i}{(8-2i)^{1/2}} & \frac{-3-3i}{(8-2i)^{1/2}} \\ \frac{1}{(8+2i)^{1/2}} & \frac{-1-i}{(8+2i)^{1/2}} & \frac{-5+2i}{(8+2i)^{1/2}} & \frac{-3+3i}{(8+2i)^{1/2}} \\ \frac{1}{2i} & \frac{-1}{2i} & \frac{-4}{2i} & \frac{-6}{2i} \end{bmatrix},$$

and

$$U'U = \begin{bmatrix} 0 & 0 & 0 & 1 \\ 0 & 0 & 1 & 0 \\ 0 & 1 & 0 & -5 \\ 1 & 0 & -5 & -10 \end{bmatrix}.$$

CC-0. In Public Domain. Gurukul Kangri Collection, Haridwar

Digitized by Arya Samaj Foundation Chennai and eGangotri



Then since

$$B^4 = \begin{bmatrix} 31 & 100 & 130 & 60 \\ 10 & 31 & 50 & 30 \\ 5 & 10 & 6 & 0 \\ 0 & 5 & 10 & 6 \end{bmatrix},$$

$$S = U'U\,B^4 = \begin{bmatrix} 0 & 5 & 10 & 6 \\ 5 & 10 & 6 & 0 \\ 10 & 6 & 0 & 0 \\ 6 & 0 & 0 & 0 \end{bmatrix},$$

which could have been written down immediately from $B$.

Finally,

$$h = (P_0P_1P_2)^{-1} = 3,$$

and

$$T = hSH = \begin{bmatrix} 0 & 45/7 & 18 & 18 \\ 5 & 90/7 & 54/5 & 0 \\ 10 & 54/7 & 0 & 0 \\ 6 & 0 & 0 & 0 \end{bmatrix}.$$

Suppose at $t = 0$ the age distribution of the zero generation is

$$\xi_a = \{81,\ 21,\ 5,\ 1\},$$

which is a stable $\xi$ associated with the dominant root $\lambda_1 = 3$. The $n_{0,t}$ of the first generation for $t = 1, 2, 3, 4$ is given by $\chi_a = T\xi_a$ and therefore,

$$\chi_a = \{243,\ 729,\ 972,\ 486\}.$$

It will be noted that these elements are in the ratio 1 : 3 : 4 : 2, which may be compared with the first row of $U$ giving the normalized stable $\varphi_1$ associated with the root $\lambda_1$. The $n_{0,t}$ for the second generation immediately follow by the repeated application of equation (5); thus

$$n_{0,4}\ (j = 2) = 0 \times 972 + 5 \times 729 + 10 \times 243 = 6075.$$

The $n_{0,t}$ for the first three generations are

| | *Generation* | | |
|---|---|---|---|
| $t$ | 1 | 2 | 3 |
| 1 | 243 | | |
| 2 | 729 | | |
| 3 | 972 | 1,215 | |
| 4 | 486 | 6,075 | |
| 5 | | 13,608 | 6,075 |
| 6 | | 16,524 | 42,525 |
| 7 | | 10,692 | 136,080 |
| 8 | | 2,916 | 255,150 |
| 9 | | | 300,348 |
| 10 | | | 220,644 |
| 11 | | | 93,312 |
| 12 | | | 17,496 |
| Total | 2,430 | 51,030 | 1,071,630 |

CC-0. In Public Domain. Gurukul Kangri Collection, Haridwar

Digitized by Arya Samaj Foundation Chennai and eGangotri



If the $f_x$ figures from the first row of $B$ are regarded as centred at the ages of $x + 1$, the mean is 3·0476 and the second moment 0·52154. For the first three generations we have

| *Generation* | *Mean* | *Second moment* |
|---|---|---|
| 1 | 2·7000 | 0·81000 |
| 2 | 5·7476 | 1·33154 |
| 3 | 8·7952 | 1·85308 |

which fulfil the relationship between the seminvariants of the $j^{th}$ generation and those of the first generation and $f_x$ distribution. Thus the mean of the third generation is $2{\cdot}7 + 2 \times 3{\cdot}0476 = 8{\cdot}7952$, and similarly $\sigma_3^2 = 0{\cdot}81000 + 2 \times 0{\cdot}52154 = 1{\cdot}85308$. These mean values are based on the distribution of the $n_{0,t}$, each of which is regarded as centred at time $t$, and in order to obtain the means for the distribution of births it is necessary to subtract a 1/2-unit from each of these values. In this actual example the distributions tend to normality fairly rapidly, although the beginning and end of each distribution is, of course, still very abrupt. Thus for the third generation the calculated percentage distribution of births may be compared with that based on a normal distribution with a mean = 8·2952 and $\sigma = 1{\cdot}3613$, as follows:

| *Time interval* | *Calculated* | *Normal distribution* |
|---|---|---|
| <4 | — | 0·08 |
| 4– | 0·57 | 0·69 |
| 5– | 3·97 | 3·81 |
| 6– | 12·70 | 12·49 |
| 7– | 23·81 | 24·34 |
| 8– | 28·03 | 28·35 |
| 9– | 20·59 | 19·72 |
| 10– | 8·70 | 8·17 |
| 11– | 1·63 | 2·02 |
| 12– | — | 0·30 |
| >13 | — | 0·03 |
| | 100·00 | 100·00 |

Finally, the sum of the $f_x$ figures is 21, which represents the net reproduction rate ($R_0$) of the population, and the row vector

$$n_s = [21,\ 27,\ 28{\cdot}8,\ 18].$$

Thus $N_1 = \eta_s \xi_a = 2{,}430$, and $N_2 = N_1 R_0 = 51{,}030$, and so on for the successive totals. The proportion of the total births in the first generation contributed by the 81 individuals alive in the first age group of the zero generation is $21 \times 81/2{,}430$, or 70 per cent. Similarly 23·33 per cent. of the total births are contributed by the second age group, 5·93 per cent by the third, and 0·74 per cent. by the fourth.

*References*

Bartlett, M. S. (1946), "Stochastic processes." Notes of a course given at the University of North Carolina in the Fall Quarter, 1946. (It is understood that copies of these notes are available on request.)

Leslie, P. H. (1945), "On the use of matrices in certain population mathematics," *Biometrika*, **33**, 183–212.

—— (1948), "Some further notes on the use of matrices in population mathematics," *Biometrika* (in press).

Lotka, A. J. (1928), "The progeny of a population element," *Amer. J. Hyg.*, **8**, 875–901.

—— (1929), The spread of generations," *Hum. Biol.*, **1**, 305–20.

—— (1939), "A contribution to the theory of self-renewing aggregates, with special reference to industrial replacement," *Ann. Math. Statist.*, **10**, 1–25.

—— (1942), "The progeny of an entire population," *ibid.*, **13**, 115–26.

CC-0. In Public Domain. Gurukul Kangri Collection, Haridwar

Digitized by Arya Samaj Foundation Chennai and eGangotri



# A New Regression Analyser*

By Guy H. Orcutt,

(Department of Applied Economics, Cambridge)

Contents

PAGE

I. Introduction . . . . . 54
II. Method of Arranging Data for Insertion into the Regression Analyser . . . . 54
III. Theory of this Regression Analyser:
(*a*) Basic Operations . . . . . 55
(*b*) Least-squares Applications . . . . . 57
(*c*) Solution of *n* Linear Equations Containing *n* Unknowns . . . . . 63
IV. The Graphical Attachment to the Regression Analyser . . . . . 63
V. Description of the Present Model of this Regression Analyser . . . . . 64

## I. Introduction

The regression analyser described in this paper is designed to reduce the cost of finding regression and correlation coefficients in situations where series of data are used in a number of combinations. It is thought to be particularly useful when a number of lags are to be tried. The reduction of cost is brought about by two things. First, a method of arranging the data on punched cards is adopted which facilitates the building up of a library of series that can be used without repunching with any other series in any time relationship. Secondly, a non-digital type of machine is used which is very rapid and relatively inexpensive, but like all analogue machines has a limited accuracy.

By virtue of a graphical attachment the regression analyser has some utility as an educational device.

## II. Method of Arranging Data for Insertion into the Regression Analyser

One of the important time-consuming items connected with all calculating machines is the putting of data into the machines, and a substantial proportion of effort aimed at the reduction of the cost of calculation has been directed at reducing this time. The development in this direction is evident in the progress from Blaise Pascal's stylus-operated machine of 1642, through Gottfried von Leibnitz's multiplication-by-rapidly-repeated-additions machine, conceived in 1671 and finally completed in 1694, to Dorr Felt's key-driven calculating machine of 1887 and the modern punched-card machines. The present effort to incorporate more adequate memories into the large electronic computers is evidence that the problem of reducing the time necessary to arrange and feed data into the machines is still an important one.

The reason it has been found extremely useful to record data on punched cards is that it is then possible to operate on the data over and over again in various operations and combinations with very little expenditure of time in putting the data in the machine, except the time consumed in the original recording of the data on cards or other memory device. At the present stage of commercial punched card machines, the cards are successively fed through the machine, which either sorts them or multiplies and/or adds various items of data punched on the card passing under the reading brushes. The results of these operations are then automatically added to such results from other cards.

* The general concept of this machine was described as part of my doctoral thesis, *Statistical Methods and Tools for Finding Natural Laws in the Field of Economics*, Univ. of Mich., 1944, unpublished. It is with pleasure that I acknowledge my indebtedness for many valuable criticisms and suggestions that I received at this stage from Professor Paul Dwyer and Professor Arthur Smithies. The present model was first constructed at Mass. Inst. of Technology under the helpful guidance of Professor George Wadsworth as part of an investigation of weather prediction carried on for the Army Air Forces. It was then brought to the Department of Applied Economics and considerably remodelled for use here. I would also like to express my appreciation for the friendly help I have received from Richard Stone and Alan Prest during the preparation of this paper.

CC-0. In Public Domain. Gurukul Kangri Collection, Haridwar

Digitized by Arya Samaj Foundation Chennai and eGangotri



Such an arrangement of the data is satisfactory for accounting, but from the point of view of a statistician interested in dealing with time series it results in a considerable cost due to unnecessary repunching. The reason is two-fold. In the first place, investigation of the relationship between economic time series requires that the question of time lags be investigated. To do this series must be correlated in many different time relationships, instead of in just one. However, since with the present machinery only items on the same card can be multiplied together, this means that to find the correlation between two series with a given time lag each card must contain one item from one of the series and the corresponding item from the other series. To find the correlation between the same two series with a different time lag will, therefore, be inconvenient without repunching at least one of the series, since corresponding items will now be on different cards. The inefficiency of this system becomes rapidly greater if relations involving more than two series are being investigated, since the number of time lags that should be tried increases rapidly. In the second place, apart altogether from the question of lags, almost any economic time series may be tested in many combinations with each of a large number of other time series. This also requires a considerable amount of repunching. The actual time spent in these repunchings depends, of course, on the equipment available for carrying it out. Unfortunately, however, automatic high-speed repunching equipment is expensive, and the added cards that would be needed are in themselves quite an expense.

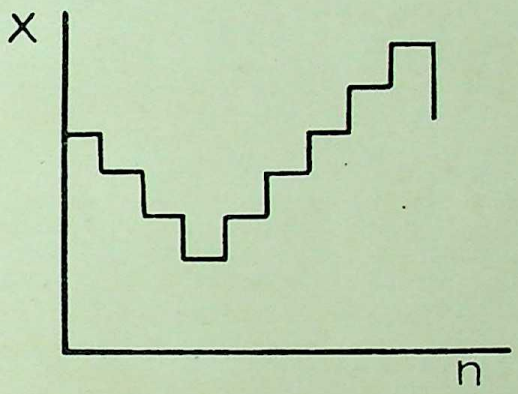


DIAGRAM 1.

In order to eliminate the time needed for repunching and the necessity, for moderately sized laboratories engaged in time series analysis, of having repunching equipment, the machine described in this paper makes use of a different arrangement for recording data. The essence of the method used is that each time series is put on a separate record. The recordings of as many series as necessary for a given calculation can then be inserted into the machine, and the machine is so designed that these recorded time series can be used in any desired time relationship. Use of this system will then make useful and desirable the building up of a library of recordings of the more frequently used economic time series, and will eliminate the need for repunching series used in any previous work by the laboratory in question. Additional economies could be effected by inter-laboratory loans of little used recordings and/or by the establishment of a central library and punching unit.

## III. THEORY OF THIS REGRESSION ANALYSER

### (a) *Basic operations*

The fundamental idea involved in the regression analyser is that of representing an entire series of numbers by the variations in time, or wave pattern, of an electrical voltage. Thus, for example, suppose a series of numbers, $X$, looked as in Diagram 1 when plotted against their position in the series. If such a series of numbers were inserted into the machine a voltage would be varied in time, or modulated, according to the wave pattern shown in Diagram 1. The design of the machine is such that the voltage would go on varying with this wave pattern for as long as desired.

CC-0. In Public Domain. Gurukul Kangri Collection, Haridwar

Digitized by Arya Samaj Foundation Chennai and eGangotri



The voltage having the wave form shown in Diagram 1 could be measured by a voltmeter, which would indicate some function of either the sum of the items of the series or the sum of the squares of the items of the series. The particular function of these sums which is read is, of course, arbitrary, since it depends on the calibration of the meter readings. If the voltage is rectified before being measured, then the meter would, when properly connected and calibrated, read the sum of the absolute values of the series of numbers.

Modulated voltages corresponding to other series of data can be produced simultaneously, and it is possible to have these various wave forms, or modulated voltages, synchronized in time with or without lags between the series. From these modulated voltages constant voltages of readily adjusted values may be subtracted. The numbers which these constant voltages represent can be indicated by the position of the control dials, and the reading of the dial indicating the voltage subtracted from the voltage representing a series of data, $X_1, X_2, X_3, \cdots X_n$, will be designated by $A_x$; that of the dial controlling the voltage subtracted from the voltage representing a series of data $Y_1, Y_2, Y_3, \cdots Y_n$, will be designated as $A_y$; and so on. The voltage resulting from the subtraction of a constant voltage, representing $A_x$, from a voltage representing the $X$ series of data, will then represent the series $X_1 - A_x$, $X_2 - A_x$, $X_3 - A_x$, $\cdots X_n - A_x$, and similarly for the subtraction of a constant voltage representing $A_y$ from the voltage representing the $Y$ series of data. The sum, sum of the squares, or sum of the absolute values of any one of these series could be read on a meter just as it could be for the unadjusted series of numbers. Each of the voltages representing one of these derived series of numbers may be applied on separate potentiometers, each of which is readily adjustable and calibrated. The readings of the movable contact of these potentiometers will be designated by $b_x$, $b_y$, and so on, and the voltages picked off the respective potentiometers will represent the series:

$$b_x(X_1 - A_x),\ b_x(X_2 - A_x),\ \cdots\ b_x(X_n - A_x),$$
$$b_y(Y_1 - A_y),\ b_y(Y_2 - A_y),\ \cdots\ b_y(Y_n - A_y),$$

and so on. The sum, sum of the squares, or sum of the absolute values of any one of these series could then be read by connecting to a meter, in an appropriate fashion, the voltage representing that series. By use of two reader-scanner devices on the same series of data it would be possible to obtain voltages representing the same series of data except that one lags the other by an adjustable amount. If one of these is applied to one set of coils of a wattmeter, while the other is applied to the second set of coils of the meter, then the meter can be made to indicate the sum of the cross-products of the two series, or

$$\Sigma b^2{}_x(X_i - A_x)\ (X_{i-k} - A_x),$$

where $k$ is an arbitrary number that can only assume integer values.

If a modulated voltage is applied over a suitable resistance and condenser in series, the voltage across the condenser will be the mean of the modulated voltage, and the voltage across the resistor will be the difference between the mean of the modulated voltage and the instantaneous value of the voltage. Thus, given a voltage representing the series $X$, a voltage representing $\bar{X}$ and a modulated voltage representing the series $X - \bar{X}$ can be found. By means of a suitable measuring device the value of $\bar{X}$ could be read.

By connecting through high resistances the voltages representing different series to a common point, a voltage will be obtained at that point which is the weighted mean of the voltages so connected, each voltage being weighted in inverse proportion to the resistance which connects it to the common point. Thus from the voltage representing the series $k_1X$ and that representing the series $k_2Y$, we may obtain a modulated voltage which represents the series $(k_1X + k_2Y)/2$, if the resistances for the voltages representing the series $k_1X$ and $k_2Y$ are equal.

A voltage may be obtained which represents the series of cross products, $XY$ of two series, $X$ and $Y$. This is done as follows: To obtain a voltage which will represent one series of numbers by its wave form a constant voltage, $K$, is modulated by the series of numbers, let us say the $X$ series, to give a voltage representing a $KX$ series, where $K$ is permanently set so as to make any meter or other measuring device read directly in the desired units. Therefore, by using the $Y$ series to modulate the varying voltage representing a $KX$ series, instead of some constant voltage, a varying voltage is obtained which represents the series of cross products times an arbitrary

CC-0. In Public Domain. Gurukul Kangri Collection, Haridwar

Digitized by Arya Samaj Foundation Chennai and eGangotri



constant, that is it represents the series $KXY$. By combining this operation with the method of obtaining a voltage modulated so as to represent the deviations of a series from its mean, we may obtain a voltage which represents the series $K(X - \bar{X})Y$ or, alternatively, the series $K(X - \bar{X})(Y - A_y)$. Here, $A_y$ is an arbitiary constant which could be set at the mean of the $Y$ series if so desired.

By applying either the voltage representing the series $K(X - \bar{X})Y$, or that representing the series $K(X - \bar{X})(Y - A_y)$, over a high resistance and condenser in series, a voltage will be produced across the condenser which will, as previously explained, be the mean of the modulated voltage applied. But since

$$K' \Sigma(X - \bar{X}) = O \text{ for } K' \text{ any constant,} \tag{1}$$

it follows that

$$K \Sigma(X - \bar{X})Y)/n = K \Sigma(X - \bar{X})(Y - A_y)/n = K[\Sigma(X - \bar{X})(Y - \bar{Y})]/n. \tag{2}$$

Therefore we may, by setting $K$ properly, read the sum of the cross products of the deviations from means of two series on some voltage-measuring device.

(b) *Least-squares applications*

All least-squares problems involve the minimization of a sum of squares of a set of differences by the proper choosing of one or more constants. Which constants are to be chosen so as to minimize which set of differences depends, of course, upon the particular application of least-squares theory. If, for example, we wish to find the equation giving $Y'$, the best possible linear estimation in the least-squares sense of series $Y$ from series $X$, the problem is one of determining the $b$ and the $a$ in the equation $Y' = bX + a$, so that:

$$\Sigma(Y_i - Y'_i)^2 = \Sigma(Y_i - bX_i - a)^2 \tag{3}$$

is at a minimum. If we desire to find the equation giving the best possible linear estimation, $Y'$, of series $Y$ in terms of series $X$ and series $Z$, the problem would be one of determining the constants $b_x$, $b_z$, and $a$ in the equation.

$$Y' = b_xX + b_zZ + a, \tag{4}$$

so that

$$\Sigma(Y_i - Y'_i)^2 = \Sigma(Y_i - b_xX_i - b_zZ_i - a)^2 \tag{5}$$

is minimized.

The usual procedure of determining the proper values of these constants is to equate to zero the partial derivatives of the sum of the squares of the differences with respect to each of these constants. This results in as many simultaneous equations as there are constants to be determined, and the desired values of the constants are those which will satisfy all the minimizing conditions, or, in other words, they are the values that will be found by the simultaneous solution of the equations. Each of these simultaneous or normal equations indicates what the value of one of the constants must be in order to give a partial minimization with any values of the other constants. That is, each of these equations gives the locus of one of the constants when that constant is chosen so as to minimize the sum of the squares of the differences with respect to itself for all values of the other constants. The simultaneous solution of all the equations gives that point at which the sum is minimized with respect to every one of the arbitrary constants. It is, of course, the intersection of the loci of all the partial minimization curves, for, only at that point is it impossible to vary one of the constants and cause a further reduction in the sum of the squares of the differences. The co-ordinates of this point will then be the desired values of the constants. Up until now, at least, the machinery developed to handle the computations involved in least-squares problems very clearly reflects the above method of minimization, in that the tendency has been to develop machines for computing the constants needed in the normal equations and separate machines for the solution of simultaneous linear equations. The constants which must be computed to write the normal equations are, of course, the sum of series, sums of squares of series, and sums of cross-products of series.

CC-0. In Public Domain. Gurukul Kangri Collection, Haridwar

Digitized by Arya Samaj Foundation Chennai and eGangotri



*The generalized procedure for least-squares problems using the regression analyser.*—Given the data, the machine will show on a dial or by a pointer, etc., some function of the sum of the squares of the differences to be minimized, corresponding to particular values of the constants which are to be determined. The machine is designed so that these constants can be manually set or adjusted as desired. The generalized procedure of operation is then to vary these constants in some prescribed order. In each case a constant is varied until the sum of the squares of the differences is indicated to be a minimum. This process is continued until it is impossible to reduce further the sum of the squares of the differences by varying any of the constants. When this result is achieved, the values of the constants so determined can be read off, and they will be the least-squares solution. In some cases the final results can be obtained by a single minimization according to each constant, in other cases more trials will be needed, but in all cases, except when the solution is indeterminate because of perfect correlation between explanatory variables, the iterative process involved will converge to the correct solution, as is shown later. And if there is not high correlation between explanatory variables the convergence toward the solution will be extremely rapid. The method used, then, is a method of iteration or of successive approximations. It eliminates the need for a machine to solve the simultaneous equations, and it eliminates the need for the calculation of the extensions. Instead of these, the machine calculates some function of the sum of the squares of the differences for any set of constants so rapidly that it is feasible to vary these arbitrary constants and observe, with very little time lag, the results of varying them.

*The determination of the mean and standard deviation.*—As an illustration of the principles involved in using the machine for solving least-squares problems we start with the problem of finding the mean of a series of data, because it provides us with the simplest possible application of the machine to least-squares problems. As a matter of fact the mean may be determined by the simple expedient of dividing the sum of the series by the number of items in the series and, as already pointed out, this may be done by applying a voltage representing the original series on a high resistance and condenser in series and measuring the voltage across the condenser. However, let us proceed with our example.

Given a series of numbers $X_1, X_2, X_3, \cdots X_n$, the mean may be defined as that constant which has a value such that the sum of the squares of the differences between it and each of the items in our series is a minimum. That is, the mean is that point which, if taken as origin for the series, would minimize the sum of the squares of the deviations of the items from that point. If we let $A$ represent an arbitrary constant, then $(X_i - A)$ represents the deviation between the $i^{\text{th}}$ item in our series and the arbitrary value $A$. $(X_i - A)^2$ is the square of this deviation and $\Sigma(X_i - A)^2$ represents the sum of the squares of the deviations of the items of our series from point $A$. We must determine $A$ so that this sum is a minimum. To do this we insert the $X$ series of data into the machine, and connect the machine so that the sum of the squares of the differences between the $X$ series and a variable constant, $A$, may be read on the meter. We then vary $A$ until the meter reading is as small as we can make it. Graphically this amounts to the following: The graph of $\Sigma(X_i - A)^2$ plotted against values of $A$ is a parabola with the axis parallel to the $\Sigma(X_i - A)^2$ axis, and it would look much like Diagram 2. For any given value of $A$ the corresponding value of the sum of the squares of the differences is given by the ordinate of the curve at that value of $A$, and is the value which would be read on the meter. As $A$ is varied until the meter reading is minimized, the sum of the squares of the differences would vary according to the curve in the diagram until the minimum is reached. The mean would then be the value of $A$ at which the meter reading is a minimum. If the meter had been adjusted and calibrated to read $\sqrt{[\Sigma(X - A)^2]/n}$ instead of the sum of the squares of the differences, this process would still have resulted in the proper determination of the mean, since both quantities are minimized by the same value of $A$. Thus while fiinding $\bar{X}$ one could also determine the standard deviation of the $X$ series.

*The determination of the linear regression coefficient, standard error, and correlation coefficient between two series of data.*—Given two series of numbers, $X_1, X_2, X_3, \cdots X_n$, and $Y_1, Y_2, Y_3, \cdots Y_n$, the regression coefficient of $Y$ on $X$ is that value of $b_x$ which will minimize $\Sigma(Y_i - b_xX_i - C)^2$ with respect to $b_x$, when $C$ is so chosen as to minimize this sum with respect to $C$. Since we know that $C = -b_x\bar{X} + \bar{Y}$ we may substitute this value for $C$ and obtain $\Sigma[(Y - \bar{Y}_i) - b_x(X_i - \bar{X})]^2$ as the sum of the squares which is to be minimized by the variation of $b_x$. To obtain the value of $b_x$ which will minimize this sum of the squares our procedure is as follows: Insert the two series

CC-0. In Public Domain. Gurukul Kangri Collection, Haridwar

Digitized by Arya Samaj Foundation Chennai and eGangotri



$X$ and $Y$ into the regression analyser, and arrange the machine to produce voltages which will represent the series as deviations from their respective means. Then make the proper connexion so that the meter reads

$$\sqrt{\{\Sigma[(Y_i - \bar{Y}) - b_x(X_i - \bar{X})]^2\}/n},$$

where $n$ is equal to the number of items, and vary $b_x$ until the meter reading is minimized. In this case the graph of the above expression plotted against $b_x$ would also be some parabola. The value of $b_x$ when this sum is minimized will be the desired regression coefficient, and the meter reading will be the standard error of estimate.

Alternatively, we may use a procedure which yields the correlation coefficient directly. Thus by some of the above operations, given two series, $X$ and $Y$, a modulated voltage can be obtained which represents the series $[(Y - \bar{Y}) - b_x(X - \bar{X})]$. By applying this voltage upon a suitable square law voltmeter, we may read some function of the mean of the series $[(Y - \bar{Y}) - b_x(X - \bar{X})]^2$.

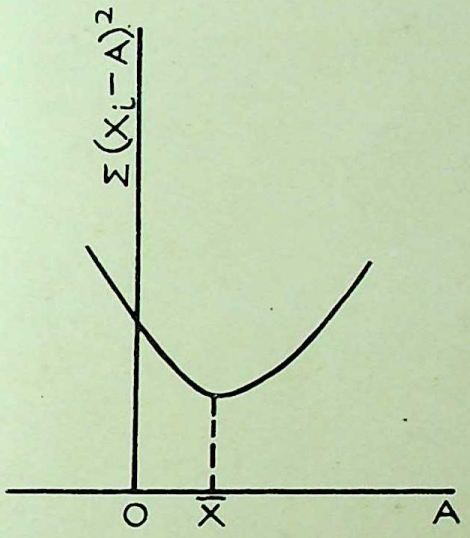


DIAGRAM 2.

Thus, by means of a voltmeter with a suitable scale the standard deviation of the $Y$ series could be read directly when $b_x$ was set equal to zero. The correlation coefficient between $X$ and $Y$ could be found as follows: Arrange the circuit and calibrate a scale on a meter so that it reads—

$$1 - K\{\Sigma[(Y - \bar{Y}) - b_x(X - \bar{X})]^2\}/n.$$

Vary $K$ until the meter reads 0 on this scale, when $b_x = 0$. Then

$$K = n/[\Sigma(Y - \bar{Y})^2].$$

Leave $K$ set and vary $b_x$ until the meter reading is maximized. Then the meter reading will be the square of the correlation coefficient and $b_x$ will be the regression coefficient giving the best least-squares estimate of $Y - \bar{Y}$ from $X - \bar{X}$.

*The solution of regression problems involving three or more series of data.*—If, in addition to our $X$ and $Y$ series of numbers, a series, $Z_1, Z_2, Z_3, \text{- - - } Z_n$, is given, the regression coefficients of the linear regression equation of best fit between these three series, $Y = b_xX + b_zZ + C$, where the $Y$ series is taken as the dependent one, are the values of $b_x$ and $b_z$ which will minimize

$$\Sigma(Y_i - b_xX_i - b_zZ_i - C)^2.$$

Since we know that $C = -b_x\bar{X} - b_z\bar{Z} + \bar{Y}$, we may substitute this value for $C$ and obtain

$$\Sigma\,[(Y_i - \bar{Y}) - b_x(X_i - \bar{X}) - b_z(Z_i - \bar{Z})]^2$$

CC-0. In Public Domain. Gurukul Kangri Collection, Haridwar

Digitized by Arya Samaj Foundation Chennai and eGangotri



as the sum of the squares which is to be minimized by the variation of $b_x$ and $b_z$. To obtain the values of $b_x$ and $b_z$ which will minimize this sum of squares our procedure is as follows: Insert the appropriate recordings of these three series into the regression analyser in such a way that the machine produces voltages representing these series as deviations from their means. Make the proper connexions so that a meter reads $\frac{1^{\text{th}}}{n}$ the square root of the sum of the squares which is to be minimized, and vary $b_x$ and $b_z$ successively, minimizing the meter reading each time, until the meter reading is minimized with respect to both. The values of $b_x$ and $b_z$ will then be the desired regression coefficients, and the meter reading will be the standard error of estimate.

In graphical terms what we have done is as follows: By the transformation of the data of each series to deviations from the mean of that series, we reduce from three to two the number of normal equations which need to be solved simultaneously to find the $b_x$ and $b_z$ of the regression line of best fit. Letting $x_i = X_i - X$, $y_i = Y_i - \bar{Y}$, and $z_i = Z_i - \bar{Z}$, these two normal equations may be written:

(6) $$b_x \Sigma x_i^2 + b_z \Sigma x_i z_i - \Sigma x_i y_i = 0.$$

(7) $$b_x \Sigma x_i z_i + b_z \Sigma z_i^2 - \Sigma y_i z_i = 0.$$

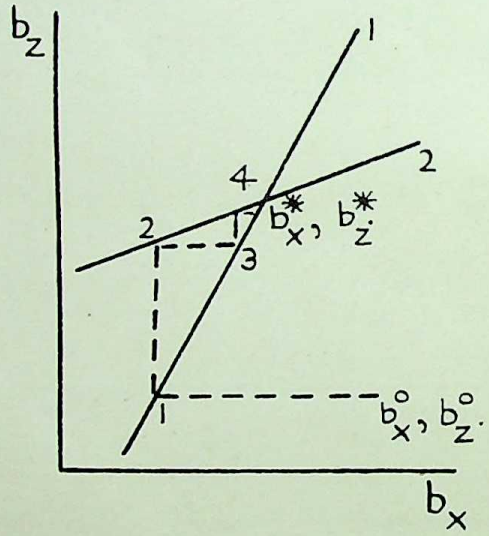


DIAGRAM 3.

At every point along the line represented by the equation (6) the sum of the squares of the deviations is minimized according to $b_x$, while at every point along the line represented by equation (7) the sum of the squares is minimized according to $b_z$. The solution is the intersection of these two lines, since at this point the sum of the squares of the deviations will be simultaneously minimized with respect to both $b_x$ and $b_z$. The slope of the first of these two equations relative to the $b_x$ axis is $-\Sigma x_i^2/\Sigma x_i z_i$, while the slope of the second relative to the $b_x$ axis is $-\Sigma x_i z_i/\Sigma z_i^2$. Unless there is perfect correlation between the two explanatory series $X$ and $Z$, we know that:

(8) $$(\Sigma x_i z_i)/\sqrt{[(\Sigma x_i^2)\,(\Sigma z_i^2)]} < 1.$$

Therefore it is easily seen that the following inequality holds:

(9) $$\left| (\Sigma x_i^2)/(\Sigma x_i z_i) \right| > \left| (\Sigma x_i z_i)/(\Sigma z_i^2) \right| .$$

This merely indicates that the absolute value of the slope of equation (6) relative to the $b_x$ axis will always be greater than the absolute value of the slope of equation (7). Graphically equations (6) and (7) might be represented by the solid lines 1 and 2 in Diagram 3. Let us suppose, then, hat the original settings of $b_x$ and $b_z$ in our machine are $b_x^{(0)}$ and $b_z^{(0)}$. Then by varying $b_x$ until

CC-0. In Public Domain. Gurukul Kangri Collection, Haridwar

Digitized by Arya Samaj Foundation Chennai and eGangotri



the sum of the squares of the deviations is minimized, we vary $b_x$ along the dotted line until point 1 is reached. Then leaving this value of $b_x$ set in the machine, we vary $b_z$ until the sum of the squares is again minimized, which in geometrical terms will take us up to point 2. Then, leaving this value of $b_z$ set in the machine, we again vary $b_x$ until the sum of the squares is minimized relative to $b_x$ for this new value of $b_z$. This takes us to point 3. Repeating this process successively we approach as closely as desired to the intersection of the two lines. For convenience I have labelled this point $b_x^*$, $b_z^*$. These final values of $b_x$ and $b_z$ are the desired regression coefficients. A little consideration will make it evident that as long as the absolute value of the slope of line 1 is greater than the absolute value of the slope of line 2, this method of iteration will insure that $b_x$ and $b_z$ converge towards the solution given by the intersection. Of course if there were no correlation between the two explanatory series the line 1 would be perpendicular, while line 2 would be horizontal, so that it would only be necessary to vary $b_x$ and $b_z$ a single time in order to arrive at the solution. If the two explanatory variables were perfectly correlated, then the two lines would be parallel and the solution would be indeterminate. However, in such a case the solution actually is indeterminate, and it is a mistake to include two perfectly or even highly correlated explanatory variables.

A modification of the above method is possible by which it is only necessary to adjust each of the $b$'s but a single time. This method may be developed as follows: Let us define two variables $u_x$ and $u_z$, so that $u_x = b_x - b_x^*$ and $u_z = b_z - b_z^*$. Then, substituting the values given for $b_x$ and $b_z$ by these relations into the normal equations (6) and (7), we obtain the following two equations:

$$u_x\Sigma x_i^2 - u_z\Sigma x_i z_i = 0 \tag{10}$$

$$u_x\Sigma x_i z_i - u_z\Sigma z_i^2 = 0. \tag{11}$$

What we have done is to shift our co-ordinate system so that the origin now falls at $b_x^*$, $b_z^*$. Varying $b_x$, and thereby $u_x$, until the sum of the squares of the deviations is minimized, we arrive at

$$u_x^{(1)} = -u_z^{(0)}(\Sigma x_i z_i)/(\Sigma x_i^2); \tag{12}$$

then, varying $u_z$, we arrive at:

$$u_z^{(1)} = -u_x^{(1)}(\Sigma x_i z_i)/(\Sigma z_i^2) = u_z^{(0)}(\Sigma x_i z_i)^2/(\Sigma x_i^2)\,(\Sigma z_i^2) = u_z r_{xz}^2. \tag{13}$$

However, since $u_z = b_z - b_z^*$, this may be rewritten:

$$b_z^{(1)} - b_z^* - (b_z^{(0)} - b_z^*)r_{xz}^2 = 0. \tag{14}$$

and solving this for $b_z^*$ gives us

$$b_z^* = (b_z^{(1)} - b_z^{(0)}r^2{}_{xz})/(1 - r_{xz}^2). \tag{15}$$

If the initial value of $b_z$ were taken equal to zero, this would further reduce to—

$$b_z^* = b_z^{(1)}/(1 - r_{xz}^2), \tag{16}$$

where $b_z^*$ is the desired value of the regression coefficient $b_z$ and $b_z^{(1)}$ is the value found for $b_z$ by the first minimization with respect to $b_z$, having first minimized with respect to $b_x$. $b_x^*$ can be found in a similar way. It can easily be seen that in general

$$u_z^{(n)} = u_z^{(n-1)}r_{xz}^2, \tag{17}$$

so that where $r_{xz}$ is small, the convergences towards the solution of successive sets of variations would be extremely rapid.

As with two variables there is an alternative method of procedure which will yield the multiple correlation coefficient directly along with the regression coefficient. Thus, where $Y$ is taken as the dependent variable, arrange the circuit and calibrate a scale on a meter so that the following may be read:

$$1 - K\Sigma(y - b_x x - b_z z)^2/n.$$

CC-0. In Public Domain. Gurukul Kangri Collection, Haridwar

Digitized by Arya Samaj Foundation Chennai and eGangotri



Set $b_x$ and $b_z$ equal to zero and vary $K$ until the meter reads 0 on this scale. Then as before $K = \frac{n}{\Sigma y^2}$. Leave $K$ set and vary $b_x$ and $b_z$ successively until the meter reading is maximized with respect to both. When this is done, the sum of the squares of the deviations will be minimized and the meter reading will be the square of the multiple correlation coefficient, $R_{y.xz}^2$, while $b_x$ and $b_z$ will be the partial regression coefficients. The abbreviated procedure of finding the regression coefficients involving only one minimization of the sums of squares with respect to each $b$ obviously may be also made use of with this method.

The above procedure of finding the multiple correlation coefficient lends itself to the determination of the partial correlations coefficients. By definition

$$r_{yz.x}^2 = 1 - (1 - R_{y.xz}^2)/(1 - R_{y.x}^2). \tag{18}$$

But since

$$R_{y.x}^2 = 1 - \Sigma[(Y - \bar{Y}) - b_{yx}(X - \bar{X})]^2/\Sigma(Y - \bar{Y})^2 \tag{19}$$

and

$$R_{yz.x}^2 = 1 - \Sigma[(Y - \bar{Y}) - b_{yx.z}(X - \bar{X}) - b_{yz.x}(Z - \bar{Z})]^2/\Sigma(Y - \bar{Y})^2 \tag{20}$$

we may express $r_{yz.x}^2$ as follows:

$$r_{yz.x}^2 = 1 - \Sigma[(Y - \bar{Y}) - b_{yx.z}(X - \bar{X}) - b_{yz.x}(Z - \bar{Z})]^2/\Sigma[(Y - \bar{Y}) - b_{yx}(X - \bar{X})]^2. \tag{21}$$

Therefore if after we have found $R_{y.x}^2$ we again adjust $K$ until the meter reads zero, then $n/K$ will equal $\Sigma[(Y - \bar{Y}) - b_{yx}(X - \bar{X})]^2$. If having done this we again maximize the meter reading and so minimize the sums of squares of differences with respect to both $b_x$ and $b_z$ we will obtain $r_{yz.x}^2$ as the meter reading and $b_{yx.z}$ and $b_{yz.x}$ as the readings of $b_x$ and $b_y$.

Given more than three series of numbers, the various coefficients obtained for the case of linear regressions between three series can also be obtained by an extension of the procedure just presented. The only difference will be that now it will be impossible to apply our modified method of obtaining the regression coefficients with only one set of variations of the $b$'s. Instead, the procedure will be to vary the $b$'s successively until the desired regression coefficients are approximated to a satisfactory precision. Unless there are high correlations between the explanatory series a very few sets of variations should be sufficient. A proof that the successive approximations of the method will converge to the point of intersection of the normal equations is given by Whittaker and Robinson.*

*The solution of non-linear regression problems.*—In general the regression analyser can be used to find the regression coefficients, index of correlation, and other constants in the same manner as it is used in the case of linear regression analysis, by the simple expedient of preparing recordings of each of the functions of each series used, and treating these recordings just as though they were independent explanatory series. Thus, for example, to find the $b_x$ and $b_{x^2}$ for the regression equation of best fit of the form,

$$Y = b_x X + b_{x^2} X^2 + C, \tag{22}$$

we would prepare recordings of the $Y$ series, the $X$ series, and the $X^2$ series.

In special cases it will be possible to avoid the extra calculation and recording involved in the above general method of solution of non-linear regression problems. Thus, for example, if one of the needed explanatory series is $X_1Z_1$, $X_2Z_2$, $X_3Z_3$, - - - $X_nZ_n$, it would be possible to connect the machine so that it would be unnecessary to calculate and record such a series. Instead, both the $X$ series and the $Z$ series would be inserted in the machine, and the voltage output from the scanner of the $X$ series would be applied over the potentiometer associated with the scanner of the $Z$ series. A single $b$ control would then be used for the two series. By using two records of a single series it would also be possible by this method to obtain a series representing the squares of the $X$ items. In case the regression equation is of the form,

$$Y = c + b_x X + b_{x^2} X^2 + b_{x^3} X^3 - - - \tag{23}$$

* E. T. Whittaker and G. Robinson, *The Calculus of Observations* (London: Blackie & Son, 1924), pp. 255–256.

CC-0. In Public Domain. Gurukul Kangri Collection, Haridwar

Digitized by Arya Samaj Foundation Chennai and eGangotri



where the values of the $Y$ variate are given at equal intervals of $X$, a standard set of the $X$, $X^2$, $X^3$, - - - series may be made which will be satisfactory for all such problems. The interval between the $X$'s can be taken as unit time, and the regression coefficients obtained will, of course, be in terms of this unit. Regression coefficients in terms of any other time unit can then be obtained by the usual procedure involved in changing the unit of time.

(c) *Solution of* n *linear equations containing* n *unknowns.*

In dealing with simultaneous equations it is common practice to denote the unknowns by letters belonging to the latter part of the alphabet, such as $X$, $Y$ and $Z$, and to designate the constants of the equations by letters belonging to the first part of the alphabet. However, in dealing with the determination of regression coefficients it is common to denote these coefficients, which are, of course, really the unknowns to be determined, by the letter $b$ with distinguishing subscripts. In order to aid in keeping clear the relationship between the solution of simultaneous linear equations by this machine and the determination of regression coefficients, I have taken the liberty of using the notation of regression analysis in treating the solution of simultaneous equations. Thus, given the following set of simultaneous linear equations,

$$X_1 b_x + Y_1 b_y + Z_1 b_z = U_1. \tag{24}$$

$$X_2 b_x + Y_2 b_y + Z_2 b_z = U_2. \tag{25}$$

$$X_3 b_x + Y_3 b_y + Z_3 b_z = U_3. \tag{26}$$

$b_x$, $b_y$ and $b_z$ are to be considered the unknowns to be solved for, while the $X$'s, $Y$'s and $Z$'s and $U$'s are the constants.

The process of solution is as follows: Put $X_1$, $X_2$ and $X_3$ on one record in succession. Put $Y_1$, $Y_2$ and $Y_3$ on another record in succession and do the same for the $Z$'s and $U$'s. Insert them in the machine just as the records were inserted when they consisted of four series of data. Set all of the $A$ controls at zero and set the $b_u$ control at one. Connect the machine so that the meter varies as:

$$\Sigma(b_x X_i + b_y Y_i + b_z Z_i - U_i)^2.$$

Then adjust the $b_x$ control until the meter reading is minimized. Leave it set and minimize with respect to $b_y$. Do the same with respect to $b_z$. Then start over with $b_x$ and keep repeating this process until the meter reading is minimized simultaneously with respect to $b_x$, $b_y$ and $b_z$. The values of $b_x$, $b_y$ and $b_z$ which accomplish this will then be the value for the unknowns which simultaneously satisfy the three linear equations. When this solution is reached, the meter reading will be zero, since all the items squared will be zero.

What we have done in effect is to substitute for the given set of linear equations the corresponding set of normal equations containing the same number of unknowns and having the same solution, but with properties which insure that the method of successive approximations which we have used will converge to the correct solution. We have done this by the application of least-squares methods to a case where the number of unknowns to be determined from a set of linear equations is exactly equal to the number of equations, Usually, of course, least-squares methods are used to determine the unknowns where there is an excess of determining conditions in such a manner as to minimize the sum of the squares of the deviations. If the original equations would have converged by the iterative method used, then convergence with the normalized equations will be much faster. This means that if the original set were already the normal equations from a least-squares problem, the rate of convergence by this method would be very rapid.

## IV. The Graphical Attachment to the Regression Analyser

The object of this attachment is to provide a graphical representation of series being dealt with by the regression analyser. The value of such a device as an educational aid in the teaching of statistics is apparent, as is also its value to the many who never feel completely confident when dealing with statistical and mathematical operations. In either case the ability to "see" what is being done would, by increasing the understanding, be of considerable assistance. But even to an experienced statistician such a device may be of assistance. Thus, for example, it is only with

CC-0. In Public Domain. Gurukul Kangri Collection, Haridwar

Digitized by Arya Samaj Foundation Chennai and eGangotri



considerable labour that the deviations between one time series and its "explanation" can be calculated and plotted. Yet this is now necessary if one wants to know whether the bulk of the deviations are concentrated in certain particular years, or are systematic or random. Another application of such a device which might be of use to the experienced statistician is the representation of one series plotted against another, since this could be used to indicate whether or not the form of the relationship being tested were suitable to the data.

The central idea of this attachment is the graphical representation of the electrical wave patterns produced in the regression analyser. As it will be remembered, these electrical wave patterns represent series of data, or at least, linear functions of various combinations of series of data. The graphical representation of the electrical wave patterns is accomplished by a cathode ray oscilloscope. For the purpose of obtaining a graph of a series of data plotted against time the voltage in the regression analyser representing that variable is connected to the plates, causing a vertical deflection of the cathode ray beam. To the plates controlling the horizontal deflection is connected a voltage which is always kept proportional to the place in the series of the particular item whose voltage is being applied to the plates causing the vertical deflection. The joint effect

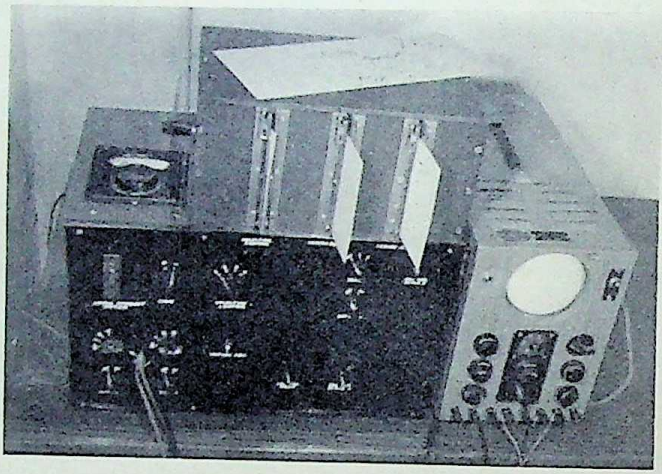

DIAGRAM 4.

of these two changing voltages will cause the cathode ray beam to trace out over and over again at very short intervals the series of data plotted against time or the position of the items in the series. Any of the voltages generated by the regression analyser may be applied to the plates causing the vertical deflection. In this way a graphical representation may be obtained of any linear combination of the series in the regression analyser plotted against time. If desired this representation could, therefore, be of a series of deviations between one of the series inserted into the machine and its explanation in terms of other series in the machine. Since a double beam cathode ray oscilloscope is readily available, comparisons between two curves are also possible. If desired, voltages present in the regression analyser may be used to control both the horizontal and vertical deflections and thus, by using a voltage representing one series on the vertical plates and a voltage representing a second series on the horizontal plates, one may obtain a graph of one of the series plotted against the other.

## V. DESCRIPTION OF THE PRESENT WORKING MODEL

In this model, a photograph of which is shown in Diagram 4, only two two-digit series of thirty or less items can be handled in one operation, while longer series may be dealt with in blocks of thirty items. This model is currently being used to obtain the sum of cross products of two series expressed as deviations from their means. This is, given two series $X$ and $Y$, the machine finds $\Sigma(X - \bar{X})(Y - \bar{Y})$. It has been used previously to find the correlation and regression coefficients between two series. Each series of numbers is recorded on a $5\frac{1}{2}$ in. $\times$ 14 in. card, the

CC-0. In Public Domain. Gurukul Kangri Collection, Haridwar

Digitized by Arya Samaj Foundation Chennai and eGangotri



two digits of the first item of a series being represented by the positions of two holes in the first row of a card, the second item being represented by two holes in the second row, and so on. A photograph of the device used to punch the cards is shown in Diagram 5. The cards currently being used have forty-five rows available for punching, but the machine could accommodate cards of any length, since they are merely slid into a slot which is open on both ends. The machine operates on all or part of the thirty items actually in the reading device, so that one series may be lagged relative to another by merely sliding its card through a little further, so that the series is read with the desired lag.

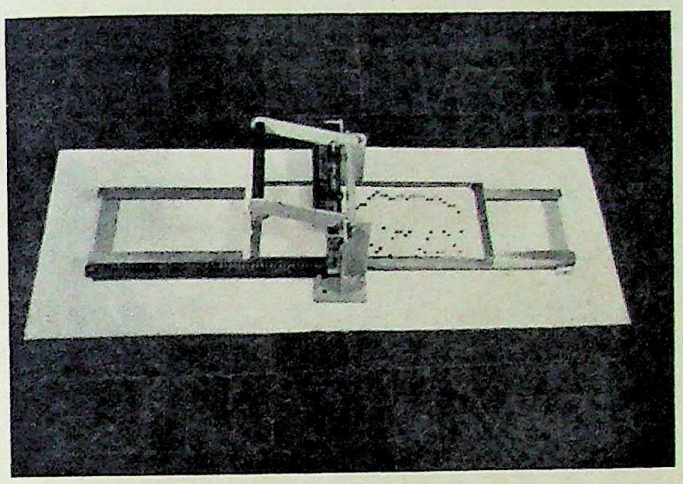

DIAGRAM 5.

*Reader-scanner Component.*

The reading of thirty items on each card is done by small spring-loaded pins, which are pushed against the card after it is in position. Where there are holes the pins pass through the card and make electrical connexions with metal strips which are behind the card. Where there are no holes the pins hit the card and are prevented from making connexions. All of the thirty pins corresponding to each column of a card are connected electrically to a single metal strip, and for each digit there are ten of these metal strips running lengthwise of the card, making a total of twenty such strips for each of our two-digit series of numbers. The twenty strips corresponding to a given series are connected to ten fixed points on a potentiometer or voltage divider, in such a fashion that the voltages applied to each of the ten metal strips (corresponding to each digit) range from 0/9, 1/9, 2/9 through 9/9 of the voltage applied over the potentiometer. On the other side of each card from the metal strips running parallel to the columns are metal strips running parallel to the rows, one for each digit of each row or sixty in all for each card. The position of a hole in a row, corresponding to a single digit of a single item, determines which of the ten voltages from the voltage divider is applied on the appropriate metal strip. Each of the sixty strips of this type are connected individually to segments of a commutator, of which there are two for each series, one for each series of digits of the two-digit numbers. The connexions are made in an order such that the successive segments of each commutator correspond to successive items in the series, the units being associated with the segments of one commutator, while the tens are associated with the segments of the other. A silver graphite brush rotates continuously at a constant speed over each commutator so as to connect successively with each of the thirty silver segments. Therefore, if a constant voltage is applied on the potentiometer to which the metal strips running parallel to the columns are connected, then the voltages picked up by the two rotating silver graphite brushes corresponding to that series will vary in time with wave forms which represent the series of digits to which they correspond. The voltage representing the tens will be of the same order of magnitude as that representing the units, and the voltage representing the series of two-digit numbers is obtained by averaging the voltage representing the units with that representing the tens in such a



CC-0. In Public Domain. Gurukul Kangri Collection, Haridwar

Digitized by Arya Samaj Foundation Chennai and eGangotri



way that the latter is given ten times the weight of the former. The arrangement of one of these reader-scanner units corresponding to a single series is shown schematically in Diagram 6. Henceforth we will merely draw a block labelled reader-scanner to represent an entire unit such as shown in the diagram. In reading this diagram it should be understood that the numbered taps on the potentiometer joining A and B are connected to the like numbered horizontal strips of the reader of the tens and of the units. The numbered vertical strips are connected to the like numbered

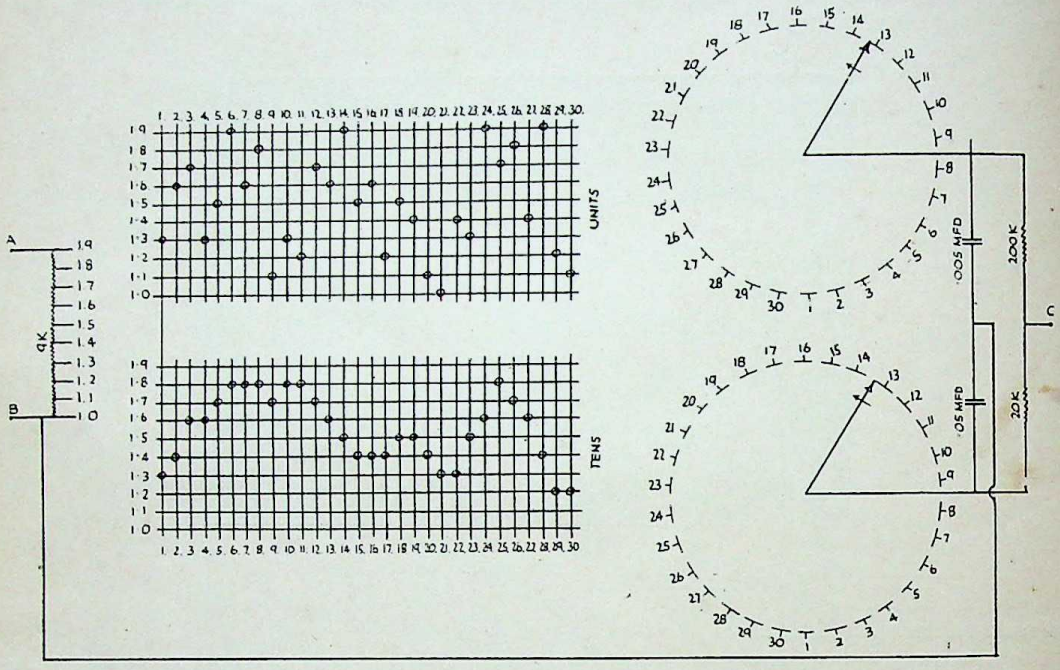


DIAGRAM 6.—Reader scanner units.

segments of the commutator to their right: that is, the vertical strips of the tens reader are connected to the segments of the lower commutator, and the vertical strips of the units reader are connected to the segments of the upper commutator. Actually these two commutators are mounted on the same shaft and so synchronized. There is a spring-loaded pin at each point of intersection of the vertical and horizontal strips of the readers. The circles at some of the points of intersection are supposed to represent hypothetical holes in the card being read, and so indicate the points at which vertical strips are connected to horizontal strips for a particular series of data.

*Circuit for* $\Sigma(X - \bar{X})(Y - \bar{Y})$.

If, instead of applying a constant voltage over the potentiometer in a reader-scanner unit, we apply a voltage which is the output of another reader-scanner unit, we will get a voltage which varies in time as the series of cross products of the two series. The principle underlying this method of multiplying is illustrated in Diagram 7. Here a constant voltage $C$ is applied on the

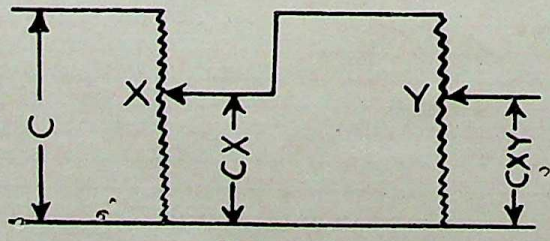


DIAGRAM 7.

CC-0. In Public Domain. Gurukul Kangri Collection, Haridwar

Digitized by Arya Samaj Foundation Chennai and eGangotri



first potentiometer. $X$ represents the fraction of the voltage drop over the entire potentiometer which is picked off. Thus the voltage applied on the second potentiometer is $CX$, and if $Y$ is the fraction of this voltage which is picked off then the final voltage will be $CXY$. What the machine does is to vary $X$ in time by means of a reader-scanner device in such a way as to represent one series repeated over and over again, and likewise to vary $Y$ in time so as to represent a second series repeated over and over again.

Since what we wish to obtain is $\Sigma(X - \bar{X})(Y - \bar{Y})$, we need to apply $C(X - \bar{X})$ on the second potentiometer instead of $CX$ and, as pointed out earlier in this paper, $CX$ may be obtained as the voltage drop across a condenser if $CX$ is applied on a relatively high resistance in series with the condenser. Thus by connecting the lower end of the potentiometer associated with $Y$ in Diagram 7 to a condenser which has its other end connected to the first potentiometer, we will be applying the voltage $CS$ to the top of the second potentiometer and $C\bar{X}$ to the bottom. The voltage picked off it will then be $C(X - \bar{X})Y$, and by virtue of the reader-scanner device will vary in time so as to

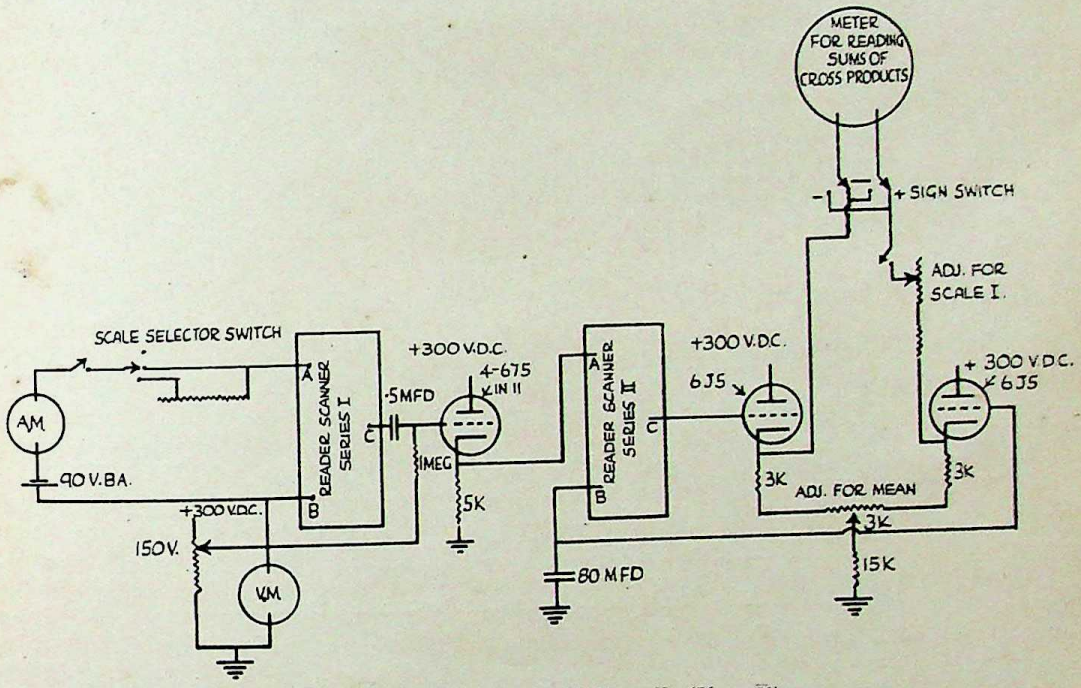


DIAGRAM 8.—Circuit for $\Sigma(X_i - \bar{X})(Y_i - \bar{Y})$.

represent the entire series of cross products. By applying this voltage over another high resistance and condenser in series the voltage drop across the condenser will be made equal to the mean of $C(X - \bar{X})Y$, and so by adjusting $C$ or the scale of a voltage-measuring device we may read this voltage as $\Sigma(X - \bar{X})Y$, which is, of course, as previously pointed out, equal to $\Sigma(X - \bar{X})(Y - \bar{Y})$.

The complete circuit is shown in Diagram 8. The vacuum tubes involved are used to make the current drain at certain points negligible, and so preserve the linear characteristics of the potentiometers. The additional potentiometers involved permit scale adjustments and the use of more than one scale.

*Circuit for regression and correlation coefficients*

In this circuit, shown in Diagram 9, the reader-scanners are parallel rather than in series. If we imagine series I to be the $X$ series of data and series II to be the $Y$ series of data, then the output voltages of these readers will represent the series $\pm(X + C)$ and $(Y + C)$ respectively, where $C$ is some constant and where the sign of $(X + C)$ may be set as desired by the switch which reverses

CC-0. In Public Domain. Gurukul Kangri Collection, Haridwar

Digitized by Arya Samaj Foundation Chennai and eGangotri



the leads of the reader-scanner of series I. The voltages picked off the potentiometers in the cathode circuits of the following valves will represent the series $b_x(X + C')$ and $b_y(Y + C')$ respectively, where $C'$ is some constant and $b_x$ and $b_y$ can be set as desired. The potentiometers on which $b_x$ and $b_y$ can be set are labelled $b_x$ control and $b_y$ control. The voltage applied on the grid of the next valve will represent the series $\frac{1}{2}[b_y(Y - C') - b_x(X - C')]$, where the sign switch has been set to read the $X$ series negatively. The voltage taken off the $K$ control will represent the series $K[b_y(Y - C'') - b_x(X - C'')]$, where $K$ is a constant which may be set as desired on the $K$ control and $C''$ is some constant. The condenser in the output circuit of the $K$ control serves to remove the direct current components of the voltage, and the voltage differential between the cathodes of the last two valves on the right will represent the series $K(b_y y - b_x x)$. This voltage may be applied on the heater of a small heater-thermocouple tube, and the output of the thermocouple applied on a direct current voltmeter. The output voltage of the thermocouple will be some function of the mean square of the current passed through the heater, and thus the voltmeter may be calibrated to read:

$$1 - K\Sigma(b_y y - b_x x)^2/n.$$

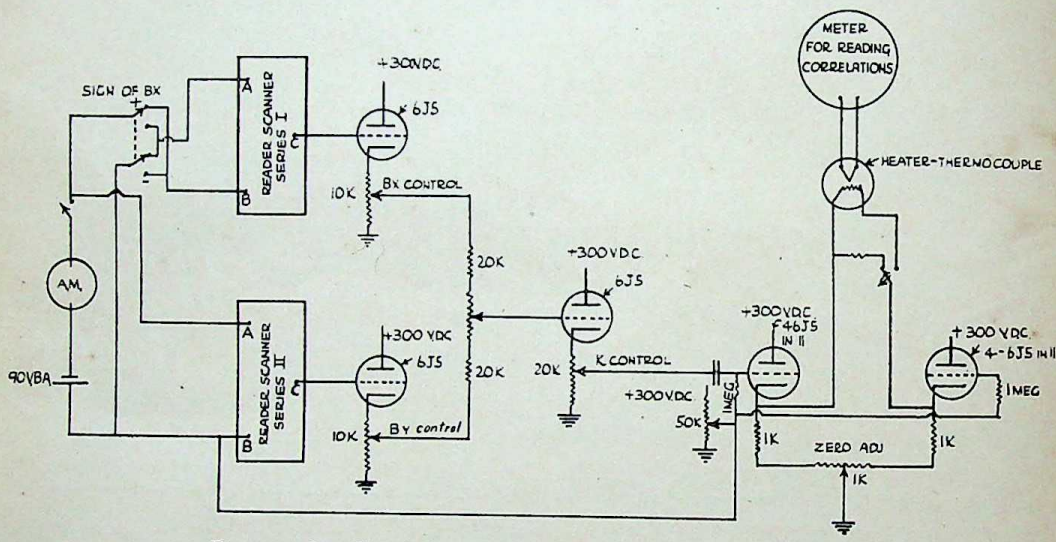


DIAGRAM 9.—Circuit for regression and correlation coefficients.

Now as previously explained the square of the correlation coefficient may be obtained as follows: Set $b_y = 1$ and $b_x = 0$. Then vary $K$ until the meter reading is equal to zero. Then $K = n/\Sigma y^2$. Leave $K$ set and vary $b_x$ until the meter reading is maximized. Then the meter will read

$$1 - \Sigma(Y - b_x x)^2/\Sigma y^2$$

where the $b_x$ has been chosen to maximize the reading and therefore to minimize $\Sigma(y - bx)^2$. The meter reading will thus be the square of the correlation coefficient, and $b_x$ will be the regression coefficient giving the best least square estimate of $y$ from $x$.

*Results obtained*

In a recent study* of the sampling distribution of the correlation coefficient between non-related serially correlated series, the present machine was used to obtain 1890 sums of cross products of deviations from means. 108 30-item series were punched on cards, and then each card was used with each of 36 other cards. The punching of the cards took about four to five minutes per card, and it took about 30 seconds, using the machine, to obtain each sum of cross products

* Orcutt, G. H. and James, S. F., "Testing the Significance of Correlation between Economic Time Series."

CC-0. In Public Domain. Gurukul Kangri Collection, Haridwar

Digitized by Arya Samaj Foundation Chennai and eGangotri



of deviations from means and write it down. As a check on the machine every 40th correlation was computed independently on an ordinary digital calculator. The resulting comparison is shown in Table 1 under the heading Check I. Next we picked out all the correlations equal to or greater than 0·90, and recalculated these 56 correlations using an ordinary machine. (It is to be noticed that $\bar{r}$ is the mean of the 48 correlations obtained in this way and $s$ is the standard deviation

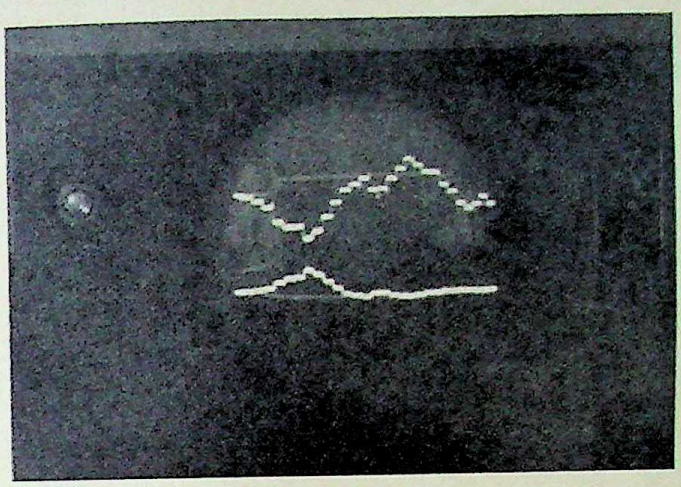

DIAGRAM 10.

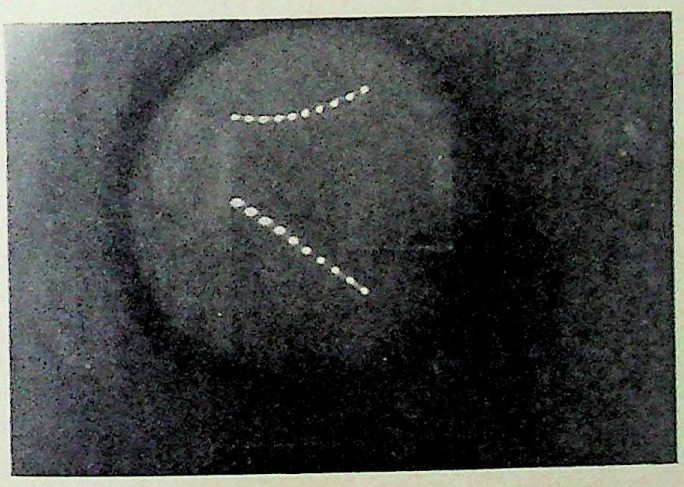

DIAGRAM 11.

of these correlations from zero.) The results of these calculations are shown in Table 1 under the heading of Check II. No systematic checking has as yet been carried out of the reliability of the machine when using the circuit shown in Diagram 9, although the results achieved appear encouraging.

The present model has been provided with a graphical attachment, and Diagram 10 is a photograph of the device being used to graph two series of numbers against their position in the series. The top curve is the graph of a series punched on a card, while the lower curve is the graph of the cross products of two series both of which are punched on cards. Diagram 11 is a photograph of two scatter diagrams. In the bottom one the series 00, 11, 22, 33,- - - 99 is plotted against a similar

CC-0. In Public Domain. Gurukul Kangri Collection, Haridwar

Digitized by Arya Samaj Foundation Chennai and eGangotri



series. In the top scatter diagram the horizontal deflection has been controlled by the series 00, 11, 22, 33, - - - 99, and the vertical deflection has been controlled by the series of cross-products of two such series, one of which is in terms of deviations from its mean.

TABLE 1

| | Check 1. | | | Check 2. | | |
|---|---|---|---|---|---|---|
| | No. | $\bar{r}$. | $s$. | No. | $\bar{r}$. | $s$. |
| Using ordinary digital machine . | 48 | 0·042 | 0·557 | 56 | 0·193 | 0·930 |
| Using new machine . . . | 48 | 0·046 | 0·543 | 56 | 0·198 | 0·931 |
| Difference . . . . . | .. | −0·004 | 0·014 | .. | −0·005 | −0·001 |
| Standard error of individual differences . . . . | | 0·035 | | | 0·032 | |

CC-0. In Public Domain. Gurukul Kangri Collection, Haridwar

Digitized by Arya Samaj Foundation Chennai and eGangotri



# REPORTS FROM COUNCIL AND NOTICES TO FELLOWS

## GENERAL REGULATIONS FOR THE 1948 AND 1949 CERTIFICATE EXAMINATIONS FOR FELLOWS AND FOR THE 1949 DIPLOMA EXAMINATION FOR FELLOWS

### CERTIFICATE EXAMINATIONS

### GENERAL REGULATIONS FOR THE 1948 AND 1949 CERTIFICATE EXAMINATIONS FOR FELLOWS

1. In accordance with Bye-law No. 38, the Council has instituted examinations for the purpose of testing the statistical proficiency of such Fellows as may desire to submit themselves for examination.

*Details of Examinations*

2. The Syllabus of the 1948 and 1949 Certificate Examinations is given in Appendix I. Specimen examination papers were given in the First Report of the Examinations Committee, copies of which are still available, and can be obtained post free from the Assistant Secretary on payment of a fee of 1/-. The Report also appears in the *Journal* of the Society, Vol. xc, Part I, 1947, pp. 62–67. The examination papers for the 1947 Certificate Examination can be obtained from the Assistant Secretary, post free, on payment of a fee of 1/- per set.

The examinations will be conducted by printed papers and will be pass examinations only; lists of successful candidates will be published in alphabetical order, without division into classes.

The Certificate of the Society will be awarded to candidates who satisfy the examiners in all four Sections of the examination provided that both of Sections A and B are passed at one and the same examination, and that both of Sections C and D are passed at the same or at a previous or subsequent examination. No Fellow may enter for Sections C and D unless he has already passed in Sections A and B or is entering at the same time for Sections A and B. The Certificate of the Society will be signed by the President or one of the Vice-Presidents, and by one of the Honorary Secretaries.

Every Certificate Examination will be conducted in accordance with the Regulations and Syllabus in force at the time of entry for the examination.

*Dates of Examinations*

3. Examinations for the Certificate of the Society will be held in London on 24th and 25th September, 1948, and in April, 1949. The actual dates of the 1949 examination will be announced in the autumn of 1948.

*Entry to Examinations*

4. Every Fellow who desires to enter for the 1948 or 1949 Certificate Examination must apply to the Assistant Secretary of the Society, at 4, Portugal Street, London, W.C. 2, for an Entry Form. He must then send the Entry Form, accompanied by a remittance for the appropriate Fee, to the

CC-0. In Public Domain. Gurukul Kangri Collection, Haridwar

Digitized by Arya Samaj Foundation Chennai and eGangotri



Assistant Secretary, so as to be received not later than 26th July, 1948, for the 1948 Examination, and not later than 14th February, 1949, for the 1949 Examination. Entry Forms received after these dates will not be accepted.

*Fees*

5. The Fees payable in respect of the 1948 and 1949 Certificate Examinations are:

For Sections A and B or for Sections C and D . . . £2
For the whole Examination (Sections A, B, C and D) . . £4

All cheques, money orders and postal orders should be made payable to the Royal Statistical Society and crossed.

*Withdrawal from Examinations*

6. If, after entry for the 1948 or 1949 Certificate Examination and the payment of the appropriate Fee, a candidate withdraws his name or fails to present himself for examination, no part of the fee paid will be returned to him, but (*a*) if notice of withdrawal is received at least six weeks before the commencement of the examination, or (*b*) if a candidate on account of illness fails to present himself for examination or retires from the examination, and furnishes within six weeks of the close of the examination satisfactory medical evidence of illness at the time of the examination, the fee paid will be carried forward to the next following Certificate Examination.

*Time Table of Examinations*

7. The Certificate Examinations will be conducted at the place, at the hours, and in the order shown on the Time Table, which will be sent to every candidate about a month before each examination. Any candidate who has not received a copy of the Time Table three weeks before the commencement of the examination should at once communicate with the Assistant Secretary.

*Notification of Results of Examinations*

8. A copy of the Pass Lists will be sent to every candidate. Every unsuccessful candidate will also receive, as soon as may be after the issue of the Pass Lists, a report on the standard which he attained in each Section of the examination for which he entered, on the following basis:

A: Good Pass. B: Pass. C: Failure. D: Bad failure.

*Exemption from Examination*

9. No candidate will be exempted from the whole or from any Section or Sections of the Certificate Examinations on the ground that he has passed another examination, or on any other ground.

*Interpretation*

10. The decision of the Council on the interpretation of any provision of the Regulations and Syllabuses of the Certificate Examinations shall be final.

## APPENDIX I

### Syllabus of the 1948 and 1949 Certificate Examinations for Fellows

To obtain the Certificate candidates must have passed the four Sections A, B, C and D below, as prescribed by the General Regulations.

One paper of three hours will be set in each Section.

The mathematics required will be approximately of the standard of Elementary Mathematics in

CC-0. In Public Domain. Gurukul Kangri Collection, Haridwar

Digitized by Arya Samaj Foundation Chennai and eGangotri



the Matriculation Examination of London University, and the emphasis will be on statistical methods and ideas rather than on mathematical analysis.

Squared paper and tables of logarithms and of squares will be supplied. Candidates may use their own slide rules.

*Section A*

Nature and scope of statistical inquiries.
Design of questionnaires.
Classification and tabulation; continuous and discontinuous variation.
General acquaintance with official statistics and other sources of existing material.
Errors and defects in published material. Pitfalls in interpretation.
Graphical presentation of results.
Elementary statistical reasoning.

*Section B*

Descriptive properties of frequency distributions.

Nature and calculation of averages and measure of dispersion—means, medians, modes, quartiles, interquartile range, standard deviation.

Elementary theory of index numbers.

Association, contingency and the elements of linear regression and correlation (partial and multiple correlation and regression not required).

Elements of interpolation and graduation.

The fitting of straight lines and parabolas.

Elementary analysis of time-series; moving averages, trend lines (but not analysis of oscillatory movements).

*Section C*

Elements of probability as applied to statistics.
Sampling methods.
Properties of the binomial, Poisson and normal distributions.
Sampling error. Standard errors of commoner statistical measures.

Tests of significance and goodness of fit; simple applications of the $\chi^2$, $t$ and $z$ (or variance ratio) tests. (Proofs will not be required.)

Elements of experimental design and analysis.
Elements of statistical quality control.

*Section D*

(1) An essay on one of a number of general statistical subjects.

(2) Practical exercises in the application of the methods covered by Sections A, B and C to the analysis of numerical data.

## DIPLOMA EXAMINATION

### General Regulations for the 1949 Diploma Examination for Fellows

1. In accordance with Bye-law No. 38, the Council has instituted examinations for the purpose of testing the statistical proficiency of such Fellows as may desire to submit themselves for examination.

*Details of Examination*

2. The Diploma of the Society will be awarded to candidates who:—

(*a*) Submit, at the time of entry for the Diploma Examination, evidence to satisfy the examiners

CC-0. In Public Domain. Gurukul Kangri Collection, Haridwar

Digitized by Arya Samaj Foundation Chennai and eGangotri



that they have had at least two years' recent practical experience of statistical work,

and either (*b*) (i) having previously been awarded the Certificate of the Society, satisfy the examiners at one and the same examination in Sections I, II and III of the Diploma Examination,

or (*b*) (ii) not having previously been awarded the Certificate of the Society, satisfy the examiners at one and the same examination in Sections A and D of the Certificate Examination and in Sections I, II and III of the Diploma Examination.

The General Regulations for the Certificate Examination include the syllabus for the separate Sections of that examination. The syllabus for Sections I, II and III of the Diploma Examination is given in Appendix I. Specimen examination papers for Sections I and II of the Diploma Examination will shortly be available, and can then be obtained from the Assistant Secretary, post free, on payment of a fee of 6d. per set.

The examination will be conducted by printed papers and will be a pass examination only; lists of successful candidates will be published in alphabetical order, without division into classes. The Diploma of the Society will be signed by the President or one of the Vice-Presidents and by one of the Honorary Secretaries, and will specify the specialized field (Section III) in which the candidate has been examined.

Every Diploma Examination will be conducted in accordance with the Regulations and Syllabus in force at the time of entry for the examination.

### *Dates of Examination*

3. The first Diploma Examination will be held in London in April, 1949. The actual dates of the 1949 examination will be announced in the autumn of 1948.

### *Entry to Examination*

4. Every Fellow who desires to enter for the Diploma Examination to be held in April, 1949, must apply to the Assistant Secretary for an Entry Form. He must send the Entry Form, duly completed and accompanied by evidence of recent practical experience of statistical work as required by par. 2 (*a*) and by a remittance for the prescribed Fee to the Assistant Secretary, so as to be received not later than 31st December, 1948. Candidates are requested to send in their Entry Forms as early as possible; no Entry Form received after 31st December, 1948, will be accepted for the Diploma Examination in April, 1949.

### *Fee*

5. The inclusive fees payable on entry for the Diploma Examination are:—

(*a*) by those who have previously been awarded the Certificate of the Society, £8;

or (*b*) by those who have not previously been awarded the Certificate of the Society, £10.

All cheques, money orders and postal orders should be made payable to the Royal Statistical Society and crossed.

### *Withdrawal from Examination*

6. If, after entry for the Diploma Examination to be held in April, 1949, and payment of the prescribed fee, a candidate withdraws his name or fails to present himself for examination, no part of the fee paid will be returned to him, but (*a*) if notice of withdrawal is received not later than 28th February, 1949, or (*b*) if a candidate on account of illness fails to present himself for examination and furnishes, not later than 31st May, 1949, satisfactory evidence of illness at the time of the examination, the fee paid will be carried forward to the next Diploma Examination.

CC-0. In Public Domain. Gurukul Kangri Collection, Haridwar

Digitized by Arya Samaj Foundation Chennai and eGangotri


*Time Table of Examination*

7. The Diploma Examination will be conducted at the place, at the hours and in the order shown on the Time Table, which will be sent to every candidate about a month before the examination. Any candidate who has not received a copy of the Time Table three weeks before the commencement of the examination should at once communicate with the Assistant Secretary.

*Notification of Results of Examination*

8. A copy of the Pass List will be sent to every candidate. Every unsuccessful candidate will also receive, as soon as may be after the issue of the Pass List, a report on the standard which he attained in each Section of the examination for which he entered, on the following basis:—

A: Good Pass. B: Pass. C: Failure. D: Bad Failure.

*Exemption from Examination*

9. No candidate will be exempted from the whole or from any Section or Sections of the Examination on the ground that he has passed another examination, or on any other ground, except as provided in par. 2 of these Regulations.

*Interpretation*

10. The decision of the Council on the interpretation of any provision of the Regulations and Syllabus of the Diploma Examination shall be final.

## APPENDIX I

### Syllabus of Sections I, II and III of the 1949 Diploma Examination

One paper will be set on each of Sections I, II and III. Each paper will be of three hours and will contain ten questions; full marks can be obtained on five questions and not more than six questions may be attempted.

Squared paper and tables of squares and of logarithms will be supplied. Candidates may use their own slide rules.

*Section I*

General properties of frequency distributions.
Particular distributions such as the normal, binomial, Poisson and Pareto.
General theory of sampling distributions.
The principal tests of significance in common use.
Statistical inference, including maximum likelihood and confidence or fiducial intervals.
Regression and correlation analysis up to and including multiple and curvilinear regression; association and contingency.
Analysis of variance and covariance.

*Section II*

The design and analysis of sampling investigations.
Theory and design of index numbers.
Time series, including oscillatory movements.
The design and analysis of experiments and test observations.
Multivariate analysis.
General principles of punched card machines and other mechanical aids.
Interpolation and approximate numerical integration.

CC-0. In Public Domain. Gurukul Kangri Collection, Haridwar

Digitized by Arya Samaj Foundation Chennai and eGangotri



*Section III*

Candidates will be examined on *one* of the following specialized fields to be selected by them on entry for the examination:—

1. Demography and vital statistics.
2. Design and analysis of censuses and sampling inquiries.
3. Industrial experimentation, including quality control.
4. Econometrics.
5. Descriptive economics.
6. Medical statistics.
7. Biological and agricultural research.
8. Psychology and education.

Candidates will be expected to show a knowledge of the application of statistical methods to the chosen field, including (*a*) the usual sources of information together with their defects and the pitfalls in their interpretation, and (*b*) a critical understanding of the particular methods usually employed.

For subsequent Diploma Examinations, the Council will be prepared to consider the inclusion of other specialized fields in Section III of the syllabus.

Any candidate who has obtained the Diploma of the Society may offer himself for examination in Section III in one or more additional specialized fields, and if he satisfies the examiners his Diploma will be suitably endorsed.

---

The specimen papers for the Diploma examination have now been issued, and are reproduced on the following pages.

CC-0. In Public Domain. Gurukul Kangri Collection, Haridwar

Digitized by Arya Samaj Foundation Chennai and eGangotri



# DIPLOMA EXAMINATION FOR FELLOWS

## SPECIMEN PAPERS OF SECTIONS I AND II

### SECTION I

*(Three hours; full marks can be obtained on five questions, and not more than six should be attempted)*

1. 1. Define the Poisson Distribution, and indicate some types of data which might give rise to it in practice.

Show that the sum of two independent variates which are distributed in the Poisson form is also distributed in that form. Show whether this is true of the difference of two such variates.

1. 2. Show that the sum of $n$ independent variates, each of which is normally distributed, is itself normally distributed. Find the parameters of the distribution of the sum in terms of those of the separate variates.

The lengths of the forearm and upper arm of a certain population of human beings are normally distributed. Under what conditions is the length of the whole arm normally distributed?

1. 3. Derive the binomial distribution for the simple sampling of attributes.

If sets of $n$ members are drawn at random, one set from each of $k$ populations, with proportion of success $\pi_1, \pi_2, \ldots \pi_k$, show that for the resulting distribution the number of successes $m$ has a sampling variance

$$var.\ m = n\,\bar{\pi}\,(1-\bar{\pi}) + n(n-1)\ var.\ \pi,$$

where $\bar{\pi}$ is the mean, and *var.* $\pi$ the variance of the $\pi$'s in the $k$ populations.

What is the significance of this result in sampling from a "patchy" population?

1. 4. Explain, with brief illustrations, what is meant by four of the following:—

(*a*) Rank correlation.
(*b*) Nonsense correlation.
(*c*) Partial correlation.
(*d*) Multiple correlation.
(*e*) Intra-class correlation.
(*f*) Normal correlation.

1. 5. State without proof the main properties of the $\chi^2$ distribution. Explain how it is used to test independence in association and contingency tables.

1. 6. In an experiment, a "treatment group" of 10 observations $x_1, x_2, \ldots, x_{10}$ was compared with a "control group" of 15 observations $y_1, y_2, \ldots, y_{15}$. Describe the $t$-test for comparing the two means $\bar{x}$ and $\bar{y}$ and state briefly what is meant by "$t$ is significant at 5 per cent."

In another experiment there were 20 different treatment groups, each containing 10 observations, yielding respective treatment means, ${}_1\bar{x}, {}_2\bar{x}, \ldots, {}_{20}\bar{x}$, all to be compared with the control mean $\bar{y}$. What modifications would you suggest for the tests of significance?

1. 7. By means of the analysis of variance, derive a test for the significance of the multiple correlation co-efficient, stating clearly the assumptions on which you proceed.

1. 8. Define a quantile and show that in large samples of size $n$, the variance of the value $x_1$, which divides the sample into proportions $p_1$ and $q_1 = 1 - p_1$ is $p_1 q_1/(n f_1^2)$, where $f_1$ is the ordinate of the frequency function at $x_1$. Consider a second point, $x_2$ dividing the same sample into proportions $p_2$ and $q_2 = 1 - p_2$ and let $p_1 < \frac{1}{2}$ and $q_2 = p_1$.

Find the large sample result for the variance of the interquantile range, $d = x_2 - x_1$. If the parent population is normal how could you use $d$ to estimate $\sigma$?

Describe how you would find *that* interquantile range for which the estimate of $\sigma$ has minimum variance.

CC-0. In Public Domain. Gurukul Kangri Collection, Haridwar

Digitized by Arya Samaj Foundation Chennai and eGangotri



1. 9. A regression $y = a + bx$ is fitted to observed pairs of values $x_1, y_1; x_2, y_2; \ldots; x_n, y_n$. Derive the formulae for the least square fit and state under what assumptions the least square estimators of $a$ and $b$ agree with those yielded by maximum likelihood.

1. 10. Explain what is meant by confidence intervals. Show that for the rectangular distribution $dF = dx/\theta$, $0 \leqslant x \leqslant \theta$ and confidence co-efficient $\alpha$, confidence limits for $\theta$ are $t$ and $t/A$ where $t$ is the sample range in a sample of $n$ and

$$A^{n-1}\{n - (n-1)A\} = 1 - \alpha.$$

## Section II

*(Three hours; full marks can be obtained on five questions, and not more than six should be attempted)*

II. 1. Give a brief account of any investigations known to you into the appropriate size of sampling units.

An inquiry is to be carried out to estimate the mean age of the population of a certain city. The city may be regarded as grouped into wards, each of which is divided into blocks, each of which consists of streets. Discuss generally what would be the appropriate unit, the individual, the household, the street, the block or the ward.

II. 2. A random sample of $n$ is drawn in a single clutch from a population of $N$ members, of which a proportion $p$ have a certain attribute $A$ and $q = (1 - p)$ do not exhibit $A$. Show that the sampling variance of the number $m$ which exhibit $A$ in the sample is

$$var.\ m = (N-n)\, n\, p\, q\, /(N-1).$$

How far would this result be modified if the numbers of the sample were drawn one after another?

II. 3. Describe Irving Fisher's "ideal" price index number, and give any examples you know where data are sufficiently complete to enable such an index to be constructed.

II. 4. Explain the use of a variable sampling fraction in stratified sampling. Give any methods known to you of determining the appropriate fractions in particular cases.

II. 5. In a large scale experiment on fertilizer policy, 5 fertilizers were each applied to 4 plots arranged in 4 randomized blocks, at each of 6 different stations covering a region. Describe the appropriate analysis of variance of the $5 \times 4 \times 6 = 120$ experimental yields, giving the degrees of freedom for each component and indicating the calculations of the sums of squares.

Discuss the tests of significance for (*a*) regional recommendations and (*b*) local recommendations and criticize the design.

II. 6. State shortly the object of variate-differencing in the theory of time series.

A random series is differenced $m$ times. Show that the serial correlation of order $k$ of the series (assumed long) is given by

$$r_k = (-1)^k \frac{m(m-1)\ldots(m-k+1)}{(m+1)(m+2)\ldots(m+k)}.$$

What is the significance of this kind of result in the use of the variate-difference method?

II. 7. Write notes on three of the following:—

(*a*) Bias in public opinion polls.
(*b*) Periodogram analysis.
(*c*) Latin and Graeco-Latin Squares.
(*d*) Discriminant functions.
(*e*) Index numbers of quantity.
(*f*) The derivation of standard errors for large samples.
(*g*) The accuracy of quadrature formulae.

CC-0. In Public Domain. Gurukul Kangri Collection, Haridwar

Digitized by Arya Samaj Foundation Chennai and eGangotri



II. 8. The following is the Fellowship of the Royal Statistical Society for certain years:—

| Year . . | 1939. | 1940. | 1941. | 1942. | 1943. | 1944. | 1945. | 1946. | 1947. |
|---|---|---|---|---|---|---|---|---|---|
| Number . | 1,108 | 1,079 | 1,074 | 1,079 | 1,139 | 1,269 | 1,417 | 1,648 | 1,836 |

Estimate the Fellowship in 1950 and comment on the accuracy of your results.

II. 9. In a clinical examination of 3,000 school-children 40 ailments were assessed on a 4-point scale, viz:

Ailment: not present, present to slight degree, present, present to serious degree.

For any pair of ailments the children may be classified in a $4 \times 4$ contingency table and $\frac{1}{2} \times 40 \times 39 = 780$ such tables can be formed. If a Punched Card system is to be used for the calculation of these tables give a general account of:—

(*a*) A suitable lay-out of the clinical record sheet.

(*b*) A suitable lay-out of the punched card.

(*c*) The type of machines that could be used and the operations to be performed.

II. 10. What is understood by "Harmonic Interpolation"?

Below is given a table of percentage points of the $z$-distribution. Find the value corresponding to 160 degrees of freedom.

| Degrees of freedom . . | 30 | 40 | 60 | 120 | $\infty$ |
|---|---|---|---|---|---|
| Value of $z$ . . . | 0.6056 | 0.5513 | 0.4955 | 0.4380 | 0.3786 |

CC-0. In Public Domain. Gurukul Kangri Collection, Haridwar

Digitized by Arya Samaj Foundation Chennai and eGangotri



# REVIEWS OF STATISTICAL AND ECONOMIC BOOKS

## CONTENTS

1.—*Wintner* (*A.*). The Fourier Transforms of Probability .. .. .. .. ..
2.—The U.F.A.W. Handbook on the Care and Management of Laboratory Animals. Edited by A. N. Worden .. .. .. .. .. .. .. .. .. .. ..
3.—*Florence* (*P. Sargant*) and *Baldamus* (*W.*). Investment, Location, and Size of Plant ..
4.—The Motor Industry of Great Britain .. .. .. .. .. .. .. ..
5.—*Pigou* (*A .C.*). Aspects of British Economic History, 1918-1925 .. .. .. ..

1.—*The Fourier Transforms of Probability Distributions.* By Aurel Wintner. Ann Arbor, Michigan: Edwards Brothers. 11″ × 8½″. 185 pp.

This book is based on lectures given at Johns Hopkins University during the session 1942–43. The author, who is Professor of Mathematics at this university, has approached statistics with the purpose of introducing rigour into the mathematics, and has consequently written a book on statistical mathematics as opposed to mathematical statistics. There is no pretence by the author to the contrary and, although in parts of his text he "translates his results into the language of statisticians," it must be emphasized that this text is primarily for those undeterred by Borel sets and Baire functions wishing to adopt a rigorous approach to the theory of limiting distributions and characteristic functions. The book covers in greater detail than can be found in any other text the basic theory of characteristic functions or Fourier transforms as outlined in chapter four of Kendall's *Advanced Theory of Statistics*. After a brief introduction to distribution functions, Fourier transforms and the relations between moments and Fourier transforms are dealt with. Further chapters are added on convolutions or the distributions of sums of variables, infinite convolutions and convergence in measure, leading up to the "three-series criterion," originally given by Khintchine and Kolmogoroff, for the convergence of an infinite convolution. However, the latter part of the book dealing with inversions and projections appealed more to your reviewer, partly because it seemed to be of more immediate application, and partly because the unusual notation used by Professor Wintner was becoming more familiar. The proof of Student's distribution for any set of radially symmetric variables and the general theory of Fourier transforms of radially symmetric distributions were in particular very interesting.

As a whole this book represents a very reasonable review of this fundamental theory, but it is not without its faults. The numerous cross-references given in the text make its reading complicated and the lack of an index will prove a further drawback, although several pages are devoted to the history of the development of this theory. It is obviously impossible to keep any highly mathematical work free from errors and misprints, but unfortunately this text, which is mimeographed, seems to have significantly more than its fair share of misprints, and in particular omissions.

M. H. Q.

2.—*The U.F.A.W. Handbook on the Care and Management of Laboratory Animals.* Edited by Alastair N. Worden, with a foreword by Professor T. Dalling. With an Appendix on Statistical Analysis by Major C. W. Hume, B.Sc., Chairman of U.F.A.W. London: Baillière, Tindall & Cox, 1947. 9″. xvi + 368 pp. 31*s.* 6*d.*

The University Federation of Animal Welfare has produced a beautiful and interesting volume. The first paragraph of Professor Dalling's foreword clearly explains the aims and objects of the book:

"Every scientist who correctly appreciates the part played by laboratory animals in research work recognizes the importance of using the right technique in their maintenance and handling. Not only is the accuracy of our results at stake, but *we are under an obligation to show the utmost consideration of the animals themselves.* It behoves us, therefore, to see that they are produced and maintained under conditions that will conform to a high standard of humaneness, and will at the same time ensure that our conclusions shall be thoroughly reliable."

The first chapter by Major Hume deals with the rights of laboratory animals from the legal point of view and in practice; the next is concerned with the construction, maintenance and efficient running of the animal laboratory. Professor Buxton then contributes a chapter on pests of the animal house and their control. Each of the following twenty chapters is written by an acknowledged expert, and is concerned with a particular sort of animal. Mice, rats, voles, hamsters,

CC-0. In Public Domain. Gurukul Kangri Collection, Haridwar

Digitized by Arya Samaj Foundation Chennai and eGangotri



ferrets, hedgehogs, pigeons, canaries, amphibia and fresh-water fish are all dealt with in detail, while a final chapter provides some notes on anthropoids, dogs and cats, horses, other ungulates, shrews, vampire bats, poultry, reptiles, marine forms and other invertebrates.

Finally, Major Hume contributes a very informative statistical appendix of seventy pages. This could almost be described as a text-book in tablet form, and he has achieved a remarkable degree of clarity considering the difficulty of the task. It is written from a mathematical point of view, and contains sections on basic concepts, frequency distributions, continuous and discrete, regression correlation and association, variance and compounding of statistics, tests of significance, factorial design and analysis of variance, biological assay, planning and literature. Particularly useful features are the sub-section on confounding in experimental design, and four nomograms for testing significance. We have detected two misprints at the foot of p. 313, and an incorrect statement at the foot of p. 320 on testing the significance of the difference between the greatest and the least of several means (say $N$). It must be wrong to divide the conventional significance level by $\frac{1}{2}N(N-1)$, since only $(N-1)$ out of all possible pairs of differences are independent. These are, however, quite minor points, and although there might be differences of opinion on the form in which some of the explanations are given—for instance that of fiducial probability—we feel that the author has achieved his aim as far as it was possible.

"The Appendix is intended to provide a compendium of principles and formulae useful to biologists and to serve this further purpose. The elementary text-books are written by expert statisticians, who sometimes take for granted things that are enigmas to the beginner. The present writer has tried to furnish answers to all the questions that puzzled him when he recently read up the subject for the first time, and to express concepts and principles in words that will be understood by the intelligent expert if the latter will construe them rigorously. The writer will not have burned his midnight oil in vain if as a result *even one rat the fewer shall be required in some experiment involving discomfort*."

J. O. I.

3.—*Investment, Location, and Size of Plant: A Realistic Inquiry into the Structure of British and American Industries.* By P. Sargant Florence, assisted by W. Baldamus. (Nat. Inst. for Social and Economic Research, Economic and Social Studies, VII.) Cambridge University Press, 1948. xiii, 211 pp. $8\frac{1}{2}''$. 18*s*.

In comparison with America this country has been poorly furnished with realistic studies of the structure of its industry. Professor Florence has performed a service in presenting a study which combines a careful analysis of the statistical data available on British industry with comment drawn from the field of general economic theory. The work is based mainly on the results of the 1930 Census of Production, and is supported by reference to the Census of Population and the corresponding data for German and American industry. The book contains much incidental comment on the census materials, and the authors would earn the gratitude of students if they could be persuaded to use their knowledge of these materials to prepare also a comparative guide to the available censuses.

The book is primarily a study of the factors which determine the size of plants. The authors select two of these for detailed treatment, location and investment. Immediately the problem of definition presents itself. The multi-product firm is difficult to place within its appropriate "industry." Significant localizations may be hidden by reason of the large size of the Census of Production regions. Investment is not easy to define, and it is unfortunate that the selection of "horse power per worker" as a criterion makes it impossible to carry forward the analysis by utilizing the results of the 1935 Census.

Having established their criteria, the authors study the relations between the three selected variables. The basic data is admirably presented in a series of "contingency charts," which relate the degree of localization and power per worker to the prevalent size of plant in British and American industries defined in terms of employment. From the complex of tendencies revealed by this analysis two tentative conclusions emerge. Up to a certain degree of localization, the closer the localization of an industry the larger was its prevailing plant; and secondly, the greater the investment per worker the larger the size of plant prevailing in any industry.

In the final chapter of the book an attempt is made to draw lessons for public policy from the main analysis. Twenty-nine pages are devoted to monopoly, location policy, industrial administration, the future of the "small man," and the question of the public operation of industry among other topics. One would welcome the writers' views on these subjects. However, while the main body of the analysis and a series of detailed appendices constitute the upper and nether slices of an appetizing sandwich, this chapter on "Public Policy on Size of Plant," in its present condensed version, forms a rather scanty filling.

P. A. D.



CC-0. In Public Domain. Gurukul Kangri Collection, Haridwar

Digitized by Arya Samaj Foundation Chennai and eGangotri



4.—*The Motor Industry of Great Britain*, 1947. London: Society of Motor Manufacturers and Traders, Ltd., 1947. 9½″. iii + 452 pp. 40*s*.

The re-issue of this book is another landmark in the rehabilitation of one of our leading industries. It shows by comparison with a pre-war year the results of the efforts made by the Motor Industry to improve the economic position of the country. In 1946 the production of private cars was 64 per cent. of the pre-war figure, and this figure had risen to 87 per cent. during the first half of 1947. Commercial vehicles showed a 40 per cent. increase over 1938, and this rate of increase was continued into 1947. Agricultural tractors were treble the pre-war figures, and over four times these figures in 1947. The export target for cars was almost reached in 1946, and that for commercial vehicles was exceeded. The total value of exports from the motor industry in 1946 amounted to £64,000,000, which gives some indication of its contribution to the Nation's recovery.

These figures are included in 450 pages of tables contained in this handbook. Owing to the long time required to compile the data, the figures generally refer to the year 1946, with a comparison with corresponding figures in 1938. An appendix of seven pages is included, summarizing certain information for the first half of 1947. Half the book is concerned with registrations, mainly in the United Kingdom, but including the whole world. This information is given in great detail to enable the statistician to build up comparisons in every conceivable way.

Most of the remainder of the book deals with overseas trade. This gives summarized comparisons with several pre-war years and detailed information for 1946. Although only cars and commercial vehicles are considered for the exports of foreign countries, the figures for the United Kingdom include all items which form part of the industry.

Other chapters give details of production and legislation, and miscellaneous information, such as fuel prices, roads and employment. It is interesting to note that it is estimated that 2·8 per cent. of the total population is employed, one way or another, in or by the Motor Industry.

The 123 tables in the handbook are admirably presented, and their usefulness to the industry cannot be over-emphasized. However, the user must search for his information, and general trends could be shown more conveniently in graphical form.

Altogether the book contains 16 diagrams and maps, and it is a pity that an industry of this size supporting a statistical department should not have used these to illustrate *statistical method*. For example, diagram 1 showing production of motor vehicles would have been vastly improved by drawing the regression line of production on time instead of joining the isolated points by short straight lines. Control limits on either side of the regression line would then show any change from the existing time curve, and at the same time introduce the idea of control chart technique to the management of an industry which has been slow to appreciate its usefulness.

Diagram 5 could similarly be shown as four separate control charts about regression lines with the total shown as a separate chart. Extrapolation of the regression lines would then indicate the loss caused by the war period.

The reviewer would also like to comment on the pictographs of diagram 3. It would have been preferable to show larger quantities by a larger number of symbols of the same size rather than by larger symbols. Further, the comparison should be between approximate quantities rather than between minute detail which render the figures on the diagram superfluous, especially as in one case they differ from the tabulated figures on the opposite page. D. J. D.

5.—*Aspects of British Economic History*, 1918–1925. By A. C. Pigou. London: Macmillan, 1947. 8½″. vii + 251 pp. 15*s*.

Those of us who were already working before the First World War, and have since witnessed the making of history, are exposed to a serious danger. We (for I include myself among the sinners) formed our judgments upon events as they occurred, and were inevitably influenced, in greater or less degree, by the environment in which we lived and worked. Our view was always a "close-up"; as students of a science that was becoming increasingly difficult we tried to take a detached view of current events and submitted the available evidence to close scrutiny, using all the statistical material that was available at the time. We wrote frequently and at great length upon current changes; having indicated our interpretation of events, often with confidence, sometimes even with a trace of dogmatism, we may have been more inclined, in the light of fresh evidence that afterwards became available when policies had been tested by experience, to defend our views than to admit the need for revision. Our present interpretation of the history of thirty years or more is apt to be unduly influenced by our recollection of the past. And memory is apt to play tricks. Partly for this reason we are indebted to Professor Pigou for his re-examination of the period lying between the end of the First War and the restoration of the gold standard. But that

CC-0. In Public Domain. Gurukul Kangri Collection, Haridwar

Digitized by Arya Samaj Foundation Chennai and eGangotri



is not the only reason why we welcome it. The younger economists and administrators have been largely influenced by the teaching and the writing of their seniors who, as already indicated, were themselves living through a period of dramatic events and acute controversy.

Professor Pigou points out that the present volume was written, in 1941/2, not for publication but "at the request of the Government and for use in the Departments concerned with the problems likely to arise when war should end." For this reason he was permitted to examine material hitherto unpublished. When the Government decided that the work should be undertaken it was fortunate, as we are now fortunate, that there should be available one who is regarded by many of us as the greatest British economist of his generation. Professor Pigou stresses the fact that the book is "not a work of scholarship. While parts of it have involved a good deal of labour and some thought, other parts are little more than précis-writing from secondary authorities. Time and the materials available did not permit of anything better." The date and the purpose of the book should not be forgotten. During and since the second war we have had so much experience of control and rationing that some chapters may appear scrappy; but it was the experience gained during and immediately after the first war that enabled the Government, on the second occasion, to avoid many mistakes that might otherwise have been committed.

Professor Pigou divides the period covered by his survey into four parts, the Breathing Space, the Boom, the Slump and the Doldrums, and in assigning dates for these parts he relies upon monetary data. In each of these phases he discusses employment, production, Government intervention and the monetary factor. Every chapter is so closely packed with facts that it is easier to admire the care with which they have been interpreted than to write a review that would do justice to the volume as a whole. I may therefore be forgiven for concentrating attention upon two points.

Professor Pigou states that the "Breathing Space ended and the post-war monetary Boom started in the spring of 1919; if we are pressed to name a particular date the best answer is 30th April." The evidence upon which this conclusion is based is that the falling indexes of wholesale prices reached their minima in March, food prices in May and bank clearings in March. The index number for wages remained steady till April. "Thus, for nearly half a year there was in no sense and no degree a monetary boom; rather the contrary." I confess that I was surprised by this statement. I recall that, in February and March of 1919, when we were passing through a period of serious labour unrest (which included the so-called Clyde riots), I argued in University lectures and in public meetings in Glasgow that we were already witnessing the beginning of a serious inflation which, like previous inflations, would probably spend itself in about eighteen months. That seemed to be a view commonly held at that time. One wonders whether the explanation was to be found in the fact that a large increase had already taken place in the velocity of money circulation, including the circulation of gratuities to service men on demobilization. This view is not inconsistent with the monetary data upon which the Professor bases his conclusion. Nor should we forget the fact that the dollar exchange was unpegged in March, and that sterling immediately depreciated. This depreciation would itself largely account for the April rise in wholesale prices. I refer to the point partly because we have been witnessing a similar acceleration during the present year.

The value of Professor Pigou's book is illustrated by the care exercised in his treatment of the monetary factor. We are apt to assume that the suspension of free export of gold during the first war meant that the gold standard had been abolished. During the war, as the author points out, "the export of gold by private persons had been stopped by the fear of enemy action at sea and the refusal of the Government to insure gold cargoes." With the aid of American loans the exchange was pegged at 4·76 dollars to the pound. After the Armistice gold export was in effect prevented by the co-operative effort of the Bank of England and the agencies through which export was usually carried out. On March 20, 1919, it was officially announced that the dollar exchange would be unpegged, and eleven days later the gold standard was formally abandoned. Throughout the war the gold standard had remained the legal system of this country. The abolition of the gold standard appeared inevitable. The removal of dollar support to sterling was followed by severe depreciation which, under a free gold system, would have drained our gold reserve or, alternatively, demanded very severe restriction of credit. Already, however, American prices were rising; with the depreciation in sterling British prices rose by a greater percentage, the difference being of the order of 15 per cent. "Thus the prohibition of gold export, which had been imposed to safeguard us against the risk of enforced monetary contraction, turned out, in consequence of the American Boom, to have been unnecessary for that purpose. It removed a restraining influence, which would not in fact have enforced contraction but would have limited expansion—would have prevented it from outstripping, as it actually did, the contemporaneous expansion in the United States."

CC-0. In Public Domain. Gurukul Kangri Collection, Haridwar

Digitized by Arya Samaj Foundation Chennai and eGangotri



In the preface to the book Professor Pigou asks indulgence for "this intrusion by an economist into the domain of Economic History." One of the greatest needs of the present time is an interpretation of the financial history of the present century by a theorist of the status enjoyed by him in the history of the science. He has taken the first step: future students will be fortunate if he accepts this as a goal of endeavour and reaches it. J. H. J.

---

*Editor's note on a previous review*

With reference to the review of Professor Pigou's *Income: An Introduction to Economics*, which appeared in the *Journal*, Vol. CX, Part III, 1947, pp. 271–2, Professor Pigou writes that the reviewer has made him assert that "if competition acts freely, the 'invisible hand,' of which Adam Smith spoke, will so contrive that the pursuit by each of his own private interest in the field of production will promote the aggregate interest of all (p. 72)," whereas in his book the sentence set out above in inverted commas is preceded by the words "it is sometimes argued that," and is followed by arguments expressly directed against the opinion given in that sentence.

CC-0. In Public Domain. Gurukul Kangri Collection, Haridwar

Digitized by Arya Samaj Foundation Chennai and eGangotri



## STATISTICAL NOTES

### (1) British Official Statistics

The table below shows, in summary form, movements in the oversea trade of the United Kingdom in the first two quarters of 1948, with comparable figures for the years 1938 and 1947.

£ million

| | 1938 | 1947 | 1948 First quarter | 1948 Second quarter |
|---|---|---|---|---|
| | Quarterly average | | | |
| *Retained imports*, c.i.f. | | | | |
| Food, drink and tobacco | 104·5 | 199·5 | 205·5 | 216·3 |
| Raw materials and articles mainly unmanufactured | 54·5 | 129·4 | 146·2 | 175·5 |
| Articles wholly or mainly manufactured | 53·8 | 97·7 | 113·1 | 124·5 |
| Other articles | 1·7 | 5·5 | 7·3 | 6·1 |
| Total | 214·5 | 432·1 | 472·1 | 522·4 |
| *United Kingdom Exports*, f.o.b. | | | | |
| Food, drink and tobacco | 9·0 | 16·2 | 22·9 | 24·6 |
| Raw materials and articles mainly unmanufactured | 14·2 | 8·6 | 11·6 | 17·8 |
| Articles wholly or mainly manufactured— | | | | |
| Metal goods | 43·9 | 137·5 | 173·4 | 186·4 |
| Textiles | 25·3 | 56·2 | 68·8 | 77·9 |
| Other manufactures | 22·1 | 56·0 | 65·5 | 73·0 |
| Other articles | 3·2 | 9·8 | 11·2 | 10·4 |
| Total | 117·7 | 284·3 | 353·4 | 390·1 |
| *Exports of Imported Merchandise*, f.o.b. | 15·4 | 14·8 | 15·4 | 15·9 |

The value of United Kingdom exports increased by £37 million between the first and second quarters of this year. Retained imports were up by £50 million, so that the visible adverse balance shown by the official statistics increased to £130 million, compared with £119 million in each of the two preceding quarters.

Total imports in the second quarter were valued at £538·3 million, but, in terms of volume (78 per cent. of 1938), showed no increase over the first quarter; average values have now risen to 298 per cent. of 1938. Re-exports, valued at £15·9 million, amounted to 42 per cent. of the pre-war volume.

While all three main classes shared in the increase for retained imports, the largest movement was that of £29 million for raw materials, which totalled £175·5 million, and were only 8 per cent. below the 1938 volume. Within this class iron ore, non-ferrous ores, raw cotton, oils, oilseeds, etc., hides and skins, and rubber were all at or above the pre-war volume, but imports of timber were less than half of the 1938 average.

For food, drink and tobacco the volume of retained imports (71 per cent. of 1938) was slightly lower than in the first quarter, increases for grain and flour and for miscellaneous foods being more than offset by reductions for meat, dairy produce and beverages. The volume of tobacco imports was only 26 per cent. of that in 1938.

Among manufactured goods the main feature was an increase of nearly £8 million for the largest group—manufactured oils (mainly refined petroleum); in terms of volume these were 29 per cent. higher than in 1938.

CC-0. In Public Domain. Gurukul Kangri Collection, Haridwar

Digitized by Arya Samaj Foundation Chennai and eGangotri



While import average values are nearly three times those in 1938, for exports the increase is only 147 per cent.; the volume of exports in the quarter, after allowing for this increase in average values, is estimated at 134 per cent. of 1938 compared with 126 per cent. in the first quarter.

Exports of food, drink and tobacco (£24·6 million) were maintained at just over the 1938 volume; with a further large increase in coal exports (2,781 tons) raw materials increased to two-fifths of the pre-war volume.

For manufactured goods the volume figure was 52 per cent. above 1938, compared with 43 per cent. in the previous quarter. The metals groups taken together were nearly double the 1938 volume; the two largest groups—machinery (£62·8 million) and vehicles (£60·3 million)—were 96 per cent. and 164 per cent. above 1938.

There was a general increase between the first and second quarters for all the textiles groups; in total they were 10 per cent. below the 1938 volume. Cotton exports reached 58 per cent. of 1938, while silk and rayon were nearly double the 1938 average. Among miscellaneous manufactures exports of chemicals (£21·0 million) were 56 per cent. above the 1938 volume and pottery, glassware, etc. (£11·6 million), were 106 per cent. higher.

---

The interim index of retail prices compiled by the Ministry of Labour and National Service showed an increase of 2 points in June, when it rose from 108 to 110. This increase was largely seasonal and was due almost entirely to the fact that stocks of old potatoes had become exhausted and had been replaced by new potatoes at considerably higher prices. The figures for other groups of items, except clothing, showed little change from April to June. The detailed figures for April to July were as follows:

(Prices at June 17, 1947 = 100)

| *Date* | *Food* | *Rent and Rates* | *Clothing* | *Fuel and Light* | *Household Durable Goods* | *Miscellaneous Goods* | *Services* | *Drink and Tobacco* | *Total* |
|---|---|---|---|---|---|---|---|---|---|
| Weights | 348 | 88 | 97 | 65 | 71 | 35 | 79 | 217 | 1,000 |
| April 13, 1948 | 109·3 | 99·1 | 105·7 | 109·7 | 107·3 | 108·6 | 104·7 | 110·8 | 108 |
| May 11 ,, | 108·4 | 99·1 | 107·3 | 110·2 | 107·9 | 109·2 | 104·7 | 110·8 | 108 |
| June 15 ,, | 113·5 | 99·2 | 108·5 | 110·4 | 107·5 | 109·3 | 104·8 | 110·8 | 110 |
| July 13 ,, | 108·2 | 99·2 | 109·6 | 110·8 | 107·7 | 109·3 | 104·8 | 110·8 | 108 |

In publishing the figures the Ministry of Labour states that they are in the form in which they are used in the procedure adopted for calculating the index for all the groups combined, i.e. to the nearest first place of decimals. The decimals are shown only in order that, if desired, calculations can be made of the effect of combining particular groups and excluding others. The information available as to price changes, however, is such that no precise significance can be attributed to the decimals, and for any other purposes, therefore, the figures should be used to the nearest whole number.

---

There was a slight decrease in the total working population in April to June, but the wastage rates for both men and women remained well below the average for 1947 and the decline was smaller than had been anticipated. The number of workers in civil employment, on the other hand, rose by 58,000 in April and by 10,000 in May. The following table shows the figures for March, April, May and June:

| | *Total Working Population (excluding indoor private domestic service)* | | | *Numbers in Civil Employment** (*Thousands*) | | |
|---|---|---|---|---|---|---|
| | *Men* | *Women* | *Total* | *Men* | *Women* | *Total* |
| March, 1948 | 14,642 | 5,726 | 20,368 | 13,331 | 5,609 | 18,940 |
| April ,, | 14,626 | 5,733 | 20,359 | 13,378 | 5,622 | 19,000 |
| May ,, | 14,595 | 5,723 | 20,318 | 13,405 | 5,618 | 19,023 |
| June ,, | 14,559 | 5,727 | 20,286 | 13,431 | 5,626 | 19,057 |

* Including Fire Service, Police and Civil Defence.

CC-0. In Public Domain. Gurukul Kangri Collection, Haridwar

Digitized by Arya Samaj Foundation Chennai and eGangotri


The level of unemployment rose slightly in April but fell in May and June. In the figures available up to June the emphasis has been on the numbers of persons unemployed amongst those insured under the Unemployment Insurance Acts. As from July 5th all persons became insurable and separate figures of unemployment amongst persons previously insurable are not available. Consequently, the nearest comparison is between the numbers registered as unemployed at July 12, and the total of insured and uninsured who were unemployed at earlier dates.

*Number of Unemployed Persons on the Registers of the Employment Exchanges of the Ministry of Labour and National Service at the Undermentioned Dates*

| *Date* | *Insured Unemployed* | | | *Total (Insured and Uninsured)* |
|---|---|---|---|---|
| | *Men and Boys* | *Women and Girls* | *Total* | |
| March 15, 1948 | 227,162 | 72,243 | 299,405 | 311,221 |
| April 12 ,, | 231,928 | 68,912 | 300,840 | 314,672 |
| May 10 ,, | 223,803 | 66,203 | 290,006 | 303,195 |
| June 14 ,, | 214,115 | 60,005 | 274,120 | 286,066 |
| July 12 ,, | 214,956 | 67,218 | – | 282,174 |

The total for July, 1948, includes 30,294 married women and 7,703 ex-Service personnel who had had no employment since leaving the Forces. The totals do not include registered disabled persons who were classified as suitable only for employment under sheltered conditions.

CC-0. In Public Domain. Gurukul Kangri Collection, Haridwar

Digitized by Arya Samaj Foundation Chennai and eGangotri



## CURRENT NOTES

Under the slightly amended title of the Annual Abstract of Statistics, the pre-war series of Statistical Abstracts for the United Kingdom has made a welcome reappearance after an interval of seven years. This new edition, No. 84, covers the years 1935 to 1946, and gives a generous overlap upon the 1st pre-war edition, which included the 1938 information.

The new Abstract is a product of the Cabinet Central Statistical Office, and is similar in format to their popular Monthly Digest of Statistics. This alone is a welcome measure of the valuable co-ordinating influence exerted by this section of the Cabinet Office. Further evidence of the attitude which permeates this new Abstract is contained in the Introduction, where the remark is made that:

> "The tables in the Abstract contain the latest statistics available even though they have not yet appeared in departmental publications."

It would be wrong to compare the contents of this Abstract with its forerunner on points of detail. Apart from the fact that what is one person's statistical fancy may be of little interest to his fellow, the Central Statistical Office has wisely commented in its Introduction that, while the Abstract now contains many of the new series which appeared during the war, certain statistics which appeared in the last Abstract are not included as their war-time suspension has not yet been cancelled and their collection resumed.

Examination of the table of contents shows that there has been no drastic departure from the pre-war arrangement, and only a general growth and reorganization to accord with the recent development of our national life. Thus, we now have separate divisions for Education, Labour and Prices, while that for Production has been enlarged to include both Agriculture and Fisheries, as well as the section on Mining and Metals. An extremely useful innovation lies in the introductory notes which preface some of the sets of tables, e.g., Population and Vital Statistics, Justice, Education, National Income, etc. Other new features are the General Notes and Tables of Units of Measurement: the whole air of the tabulation indicates that much progress has been made in the rationalization of these units. The detailed Index of Sources is a good exchange for the General Index, which was to be found at the end of the previous Abstracts—a piece of documentation which will help considerably in the teaching of current Official Statistics and their Sources.

Fellows will recall the publication, in Part II of the *Journal* for 1943, of the Society's Memorandum on Official Statistics. A great deal of what was therein suggested as necessary has now come to pass. It may yet be that the new and enhanced Abstract will be followed by a modified Monthly Digest containing commentary as well as tables, as was recommended at the end of paragraph 55 of the Memorandum (*J. R. Statist. Soc.* (1943), **106,** 163).

---

A 20-page pamphlet published from the General Register Office, under the title *Matters of Life and Death*, may be expected to reach a considerably wider public than do the more formidable works regularly issued by the Registrar-General of England and Wales. The aim here, which is carried out admirably, is to present, concisely and clearly, the main facts about vital statistics in this country. The first two sections describe briefly the changing size and age-structure of the population, and the improvements in methods of estimating it from the time of the Doomsday Book to the present day. They include, too, some interesting notes on comparative mortality from various diseases, and on the new departure in the Survey of Sickness, the results of which are published in the Registrar-General's Quarterly Return. The concluding section turns to the future. Economists and philosophers are divided as to whether a larger or a smaller population is the more desirable, but the vital statistician can at least predict the course of events *if* certain trends are maintained. If the average annual number of births for the ten years before the war (600,000) were maintained and present improvements in mortality rates continued, the population of England and Wales would ultimately be stabilized at about 41 millions. The annual number of births has increased considerably since the war, but there are signs that the increase may not last long. The average annual number of births for the last ten years is about 700,000, and stabilization at this figure would give a population of about 47½ millions. *Matters of Life and Death*, which contains two charts and two tables, is published by the Stationery Office at the very modest price of 6*d*.

---

CC-0. In Public Domain. Gurukul Kangri Collection, Haridwar

Digitized by Arya Samaj Foundation Chennai and eGangotri



It has recently been announced that the work of calculating mathematical tables, which has long been an important sphere of activity of the British Association for the Advancement of Science, has been transferred from a Committee of the Association to the Royal Society, which has set up a special Mathematical Tables Committee to continue and extend the earlier work. Committees of the British Association have been working with only short breaks since 1871 on the computing and printing of mathematical tables. The period since then may be divided into three parts. Prior to 1897 there were separate publications: Glaisher's Tables of $e^x$ and $e^{-x}$ (1883) and his well-known Factor Tables (1879, 1880, 1883), also Cunningham's "A Binary Canon" (1900). From 1897 to 1929 the tables computed were published in successive Annual Reports of the British Association. The last period began in 1929 with the decision to publish the tables in book form; the result is nine volumes, two part-volumes and two auxiliary tables, with a tenth volume to come on Bessel Functions to wind up the series. This represents the major activity in the British Isles on the computation and publication of purely mathematical tables in the present century; there is also, of course, the series of statistical tables started by Karl Pearson and published from University College, London.

Fellows will have a special interest in the statisticians who have been associated with this work in the past, and in the tables which have been produced which are of use to statisticians. From 1894 to 1899 Karl Pearson served on a special Committee which produced tables of the $G(r, \nu)$ or Pearson Integrals. More recently the following have at various times served on the Committee: Fisher (largely responsible for its re-constitution on a more active basis), Henderson, Comrie (Secretary, 1929–37), Irwin, Thompson (its last Chairman), Tocher, Wishart (Secretary, 1937–46), Pearson (E. S.), Stevens, Hartley (as computer), Cashen (Mrs.), Sandon and Womersley. Some half-dozen of these continue to serve, either on the main Royal Society Mathematical Tables Committee or on its general Sub-Committee. The existence of the Biometrika series of publications meant that there was no specific activity to produce statistical tables as such, but mention may be made of the table of integrals and derivatives of the normal probability integral, mainly computed by Airey, but edited by Irwin, and with an account of properties and uses by Fisher, which appeared in Volume I. Volume VII is entirely given up to tables of the probability-integral, computed by Sheppard, who, although never a member, offered the Committee his manuscripts for publication. The calculations were completed by the Committee after his death, and the volume, edited by Irwin, remains a memorial to Sheppard's labours in the field of mathematical statistics. In addition to the above there are sundry tables of mathematical functions. and interpolation tables, which are useful to statisticians. New names on the Royal Society Committee having statistical associations are Aitken and Yates.

The Royal Society Committee would be glad to receive suggestions from industrial research groups, from individual investigators and from Service departments relating to existing needs in their special fields. Requests for assistance may be met either by advice as to the most economical way of producing the desired tables, or by an undertaking to produce the tables under the auspices of the Royal Society, or, in exceptional cases, by a grant towards the cost of tabulation, or to make possible the publication of important tables which may exist only in manuscript. In the first instance inquiries should be addressed to the Assistant Secretary, The Royal Society, Burlington House, London, W. 1.

---

On January 1st, 1947, the Chancellor of the Exchequer announced in the House of Commons the appointment of a standing Inter-departmental Committee on Social and Economic Research, "to survey and advise upon research work in Government Departments, and in particular (*a*) to bring to the notice of Departments the potential value for research purposes of the material which they collect and to suggest new methods and areas of collection; (*b*) to advise on how there could be made available to research workers information gathered for their own purposes by the Departments which has potential value as material for research." One result of this survey is the publication in June, 1948, of a *Guide to Official Sources of Labour Statistics*,* giving an account of the development of the Ministry of Labour's Statistical Service, of the information collected about such subjects as employment and unemployment, wages, earnings, hours, industrial relations, retail prices and family budgets, of the changes which have taken place in the form of collection and the effect upon the comparability of successive statistics. Reference is made not only to the publications of the Ministry of Labour, but also to other official publications which include data about labour statistics. One of the appendices is a subject index to published sources of current Ministry of Labour statistics. This booklet is intended to be the first of a series. It is

* *Guides to Official Sources*. No. 1 Labour Statistics. H.M.S.O., 9d.

CC-0. In Public Domain. Gurukul Kangri Collection, Haridwar

Digitized by Arya Samaj Foundation Chennai and eGangotri



experimental in form, but the compilers hope that it may prove of value to teachers and students in the universities as well as to other research workers. The members of the Committee are drawn both from the academic staffs of the universities and from Government departments. It is noted that several are Fellows of the Royal Statistical Society.

---

The Trustees of the Houblon-Norman Fund, on the recommendation of the Advisory Committee, have made the following awards for 1948–49:

*Fellowship.*—J. M. Holden, Research Student, University of London, "A historical Study of Negotiable Instruments."

*Research Grants.*—G. R. Allen, B.A., Research Student, University of Oxford, "Industrial Trading Estates"; S. Gainsborough, B.Sc.(Econ.), B.Com., Head of Department of Commerce, Bolton Municipal Technical College, "Anglo-American Trade Relations" (at the University of Pennsylvania); F. E. Hyde, Ph.D., M.A., Professor of Economics, University of Liverpool, "The Changing Functions of the British Export Merchant"; R. O. Roberts, M.A., Assistant Lecturer, University College, Swansea, "Financial Facilities for Non-Ferrous Metal Industries in S. Wales"; P. E. Smart, LL.B., Bank official, "Banking Case Law"; Miss M. E. Turner, B.A., Research Student, University of Oxford, "Anglo-Portuguese Trade after the Methuen Treaty."

An offer of awards for 1949–50 will be made early in 1949. Further information may be obtained from the Secretary, Houblon Norman Fund, c/o Bank of England, E.C. 2.

---

The International Statistical Institute, following its post-war re-organization at the Washington meeting of 1947, has held a ballot for new members. Fellows of the Society will observe with much pleasure that Mr. Udny Yule has been elected to Honorary Fellowship of the Institute, together with Professors F. E. J. E. Borel and Charles Rist. Amongst the twenty-six ordinary members elected from statisticians throughout the world are Professor R. G. D. Allen, Mr. H. Campion, Professor Bradford Hill and Mr. M. G. Kendall.

---

The names of the following Fellows of the Society were included in the Birthday Honours List of June, 1948:

C.M.G.—Dr. Percy Stocks, Chief Medical Statistician, General Register Office.

C.B.E.—Mr. T. S. Newman, Secretary, Hearts of Oak Benefit Society.

O.B.E.—Mr. G. R. White, Deputy Leather Controller.

---

The Committee on the Teaching of Statistics has under review the question of teaching the subject in schools. It is believed that much useful information could be obtained from schools where there has been some experience of teaching Statistics in one form or another. Any information from Fellows as to the names of such schools or of individual masters would be welcomed by the Committee; it should be sent to the Assistant Secretary.

---

The Honorary Secretaries of the Society would be very glad to hear from Fellows who have back issues of the *Journal* or *Supplement* which they do not need, as the Society's stock of many parts is becoming low. They are particularly anxious to obtain copies of Vol. II (1935) of the *Supplement* (both parts) and copies of the *Journal* earlier than 1880. In addition, many later parts are now scarce, and offers will be greatly appreciated.

CC-0. In Public Domain. Gurukul Kangri Collection, Haridwar

Digitized by Arya Samaj Foundation Chennai and eGangotri



## STATISTICAL AND ECONOMIC ARTICLES IN RECENT PERIODICALS

UNITED KINGDOM—

*The Advancement of Science—*

*January* 1948—Petroleum to-day and to-morrow: *K. F. Mather.* Can Britain feed herself?: *The Rt. Hon. Walter Elliot.* Climate and efficiency: *H. C. Bazett.* Education of the man of science: report of a discussion. Operational research in war and peace: report of a discussion.

*Agricultural Economics Society, Journal of Proceedings of—*

*March* 1948—Presidential Address: Some problems of agricultural administration, with discussion: *Sir F. Floud.* The problems of marginal farms, with discussion: *O. J. Beilby.* Agricultural development in the British Colonial Empire: *Sir F. Engledew.* Labour organization on farms (with discussion): *A. W. Ashby* and *J. H. Smith.* The general scope of agricultural economics, with discussion: *H. M. Conacher.*

*The Banker—*

*January* 1948—How long will the reserves last? Canada: the Abbott Plan—and after: *H. Wincott.* The Australian Banking Act, 1947: *An Australian Financial Correspondent.* South Africa's capital influx: *A Special Correspondent.* Banks and the export drive: III—Goods in transit, and consignments: *S. Etranger.* U.S. monetary policy—deflation ahead?: *F. E. Daniels.*

*February* 1948—Franc devaluation: the economic background: *P. Uri.*

*March* 1948—The unbalance of payments. The French monetary experiment: *Jean Claude.* Argentina approaching creditor status: a background study of the Andes Agreement: *A. R. Conan.*

*April* 1948—Britain's invisible exports: *P. Bareau.*

*British Journal of Social Medicine—*

*July* 1947—The relation of morbidity to age in an army population: *L. Hogben* and *M. Johnstone.* Dietaries in maternity hospitals: *E. W. H. Cruikshank* and *C. P. Stewart.* Social service for a medical ward: *Flora I. Beck, Frances V. Gardner* and *L. J. Witts.* Risk of jaundice following transfusion with pooled plasma or serum: *L. Hogben.*

*October* 1947—Studies on age and wastage in industrial populations: *R. Padley.* School medical inspections, their value and limitations: *I. Gordon.* The medical ethnography of the second world war: *L. Hogben, Muriel M. Johnstone* and *Diana Mullings.*

*British Journal of Psychology, Statistical Section—*

*October* 1947—A comparison of factor analysis and analysis of variance: *Cyril Burt.* The maximum correlation of two weighted batteries: *G. Thomson.* Birth order, maternal age and intelligence: *J. Fraser Roberts.* The variations of intelligence with occupation, age and locality: *P. E. Vernon.* The associations between age and score in the progressive matrices test: *P. Slater.*

*Economica—*

*February* 1948—On the valuation of social income—reflections on Professor Hicks' article. Part I: *Simon Kuznets.* Central planning and Professor Robbins: *A. C. Pigou.* Planning without prices: *J. E. Meade.* Some remarks on "The Theory of Social and Economic Organization": *Edward Shils.* Bulk Purchases: *F. V. Myer.* A geometrical note on bulk purchase: *A. M. Henderson.*

*The Economic Journal—*

*December* 1947—The economic outlook: *D. H. Robertson.* Wage policy in full employment: *H. W. Singer.* Profit measurement and the trade cycle: *K. Lacey.* The British balance of payments, 1924–1938: *Tse Chun Chang.*

*March* 1948—Uncertainty and the utility function: *W. E. Armstrong.* The Transport Act, 1947: *G. J. Walker.* National income of the United Kingdom, 1870–1946: *A. R. Prest.* The significance of the new issue market for the finance of industry: *R. F. Henderson.* Britain's foreign trade problem: a reply: *T. Balogh.*

CC-0. In Public Domain. Gurukul Kangri Collection, Haridwar

Digitized by Arya Samaj Foundation Chennai and eGangotri



*The Eugenics Review*—

*January* 1948—Eugenics, population trends and the world's resources: *G. C. L. Bertram.* Galton's "Hereditary Genius": *B. S. Bramwell.*

*Faculty of Actuaries, Transactions*—

Vol. XVIII, Part V—President's Inaugural Address: *Colin S. Penn.* The actuary at war. Life office investments in a planned economy: *Lewis G. Whyte.*

*Heredity*—

*December* 1947—The genetic component of language: *C. D. Darlington.* The analysis of data from all possible reciprocal crosses between a set of parental lines: *F. Yates.* Contamination in seed crops. III. Relation with isolation distance: *A. J. Bateman.* Two sex-linkages in the house mouse with unusual recombination values: *Margaret E. Wright.* The sex chromosome in the house mouse: *R. A. Fisher, M. F. Lyon* and *A. R. G. Owen.* A new linkage in the house mouse: undulated and agouti: *T. C. Carter.* A bibliography of genetic research published in Germany, 1943–1944: *G. Staudt.*

*Institute of Actuaries, Journal*—

*December* 1947—A synthesis of methods deriving measures of decrement from observed data: *W. G. Bailey* and *H. W. Haycocks.* The trend of adult mortality in England and the United States: *Arthur Pedoe.* Merchant seamen during the war: *Sir W. Elderton.* Some observations on inverse probability including a new indifference rule: *W. Perks.* The scope for actuaries in local government service: *B. Benjamin.* Some notes on approximate product-integration: *R. E. Beard.* Statistics and administrative policy: Alfred Watson Memorial Lecture: *Sir W. Coates.*

*London and Cambridge Economic Service Bulletin*—

*February* 1948—New index of industrial production: *C. F. Carter, W. B. Reddaway, J. R. N. Stone* and *F. Winter.* Aggregate supply and demand at the end of 1948: *J. E. Meade* and *F. W. Paish.*

*The Manchester School of Economic and Social Studies*—

*January* 1948—Economic planning in war and peace: *E. Devons.* Compensation terms for nationalized industry: *J. K. Eastham.* Analysis of demand and supply in textiles: *K. S. Lomax.* Price formation and price maintenance on the aluminium market: *S. Moos.* The British four-year plan?: *E. Devons.*

*Mathematical Tables and other Aids to Computation*—

*January* 1948—A Bell Telephone Laboratories' computing machine—I. The square root method for solving simultaneous linear equations.

*Oxford University Institute of Statistics, Bulletin*—

*January* 1948—Cuts in capital expenditure: *F. A. Burchardt.* Some international aspects of the strike movement: *K. Forchheimer.*

*February* 1948—The grant provisions of the Local Government Bill: *Ursula K. Hicks.* Food and energy, some nutritional aspects of rationing: *T. Schulz.*

*March* 1948—The French national accounts: *T. Barna.* Prices and wages policy: *G. D. N. Worswick* and *K. Martin.*

*April* 1948—Consumption of groceries: *T. Schulz.* Theory and practice of the capital levies in the Netherlands: *D. B. J. Schouten.*

*Population Studies*—

*December* 1947—The influence of social conditions on mortality rates: *E. J. Buckatzsch.* The relations between male and female reproduction rates: *P. H. Karmel.* Analysis of the births in England and Wales, 1939, by father's occupation. Part 2: *W. A. B. Hopkin* and *J. Hajnal.* The enumeration of the Beersheba Bedouins in May 1946: *S. W. Dajani.* A review of the censuses and demographic statistics of China: *A. J. Jaffe.*

*March* 1948—The need of population research in China: *Ta Chen.* The relations between male and female nuptiality: *P. H. Karmel.* Demographic pattern in history: *J. C. Russell.* Mortality, past and future: *S. Peller.* The calculation of mortality-rates in the construction of life tables: a mathematical statistical study: *J. B. D. Derksen.*

CC-0. In Public Domain. Gurukul Kangri Collection, Haridwar

Digitized by Arya Samaj Foundation Chennai and eGangotri


*The Review of Economic Studies*—

Vol. XIV (2), No. 36—National central banking and the international economy: *R. Triffin.* The international economy: *H. D. Henderson.* A new view of the economics of international readjustment: *T. Balogh.* A comment: *Roy Harrod.* The pure theory of international trade: *Joan Robinson.*

UNION OF SOUTH AFRICA—

*South African Journal of Economics*—

*September* 1947—An approach to the Indian problem in South Africa (Presidential Address): *H. R. Burrows.* Some aspects of the recent inflation and stabilization of the Hungarian currency: *F. F. Winkle.* World situation of fats and oils: *S. D. Neumark.*

*December*, 1947—Some observations on foreign exchange rates in theory and practice: *H. W. J. Wijnholds.* The hardships of Britain—Mr. Harrod's ideas: *W. J. Busschau.*

UNITED STATES—

*American Academy of Political and Social Science, Annals*—

*November* 1947—The motion picture industry. (Whole number.)
*January* 1948—Foreign policies and relations of the United States. (Whole number.)
*March* 1948—Organized religion in the United States. (Whole number.)

*American Economic Review*—

*March* 1948—Are there laws of production?: *P. H. Douglas.* Monetary aspects of the economic situation: *R. G. Hawtrey.* Germany's preparation for war: *Burton Klein.* Income determination and investment: *Walter Froehlich.* Progressive taxation and sacrifice: *G. A. D. Preinreich.*

*Annals of Mathematical Statistics*—

*March* 1948—On the generalized "birth-and-death" process: *D. G. Kendall.* Probability of coincidence for two periodically recurring events: *P. I. Richards.* Non-parametric estimation, III. Statistically equivalent blocks and multivariate tolerance regions—the discontinuous case: *J. W. Tukey.* Asymptotic properties of the maximum likelihood estimate of an unknown parameter of a discrete stochastic process: *A. Wald.* Distribution of a root of a determinantal equation: *D. N. Nanda.* A k-sample slippage test for an extreme population: *F. Mosteller.* On the uniqueness of similar regions: *P. G. Hoel.* Convergence of distributions: *H. Robbins.* On random variables with comparable peakedness: *Z. W. Birnbaum.* A method for obtaining random numbers: *H. Burke Horton.* Note on the error in interpolation of a function of two independent variables: *W. M. Kincaid.* On a lemma by Kolomogoroff: *Kai-Lai Chung.* Approximate weights: *J. W. Tukey.* On the use of the non-central t-distribution for comparing percentage points of normal populations: *J. E. Walsh.* The Teaching of Statistics: Report of the Institute of Mathematical Statistics Committee on the Teaching of Statistics.

*The Bell System Technical Journal*—

*January* 1948—Statistical properties of a sine wave plus random noise: *S. O. Rice.*

*Econometrica*—

*January* 1948—Consistent estimates based on partially consistent observations: *J. Neyman* and *Elizabeth M. Scott.* Report of the Washington Meeting, September 6–18, 1947.
*April* 1948—A future role for the Econometric Society in international statistics: *C. F. Roos.* Relative prices, Say's law, and the demand for money: *Don Patinkin.* The universal discount as a means of economic stabilization: *J. G. Baker.* The short-term interest rate and the velocity of circulation: *J. N. Behrman.* Exact distribution of continuous variables in sequential analysis: *P. A. Samuelson.*

*Harvard Business Review*—

*January* 1948—Market potentials, 1948: *A. H. Johnson.* The place of research in our national life: *J. B. Conant.* Fiscal program of 80th Congress: *J. A. Maxwell.* The management challenge of marketing costs: *J. W. Culliton.*

CC-0. In Public Domain. Gurukul Kangri Collection, Haridwar

Digitized by Arya Samaj Foundation Chennai and eGangotri



*March* 1948—New England's economic prospects: *C. D. Hyson* and *A. C. Neal.* Personnel testing: *L. B. Ward.* Currency reform in the U.S.S.R.: *P. A. Baran.* Fair profit?: *J. W. Welcker.* Business profits during inflation: *D. Troop Smith.* Control of war contract profits: *N. C. Parkin.* Influence of stock split-ups on market price: *J. H. Myers* and *A. J. Bakay.*

*Journal of Political Economy*—

*February* 1948—On the rationale of group decision-making: *Duncan Black.*

*Milbank Memorial Fund Quarterly*—

*January* 1948—Approaches to a concept of social medicine; a historical survey: *George Rosen.* Industrial and occupational environment and health: *Ruth R. Puffer.* The place of nutrition in the relationship between environment and health: *H. D. Kruse.* Rural health programs in different nations: *M. I. Roemer.* A statistical study of cancer among diabetics: *P. H. Jacobson.*

*Quarterly Journal of Economics*—

*February* 1948—Demand theory reconsidered: *O. Morgenstern.* Some economic implications of atomic energy: *Walter Isard.* Proportionality, divisibility and economies of scale: *E. H. Chamberlin.* The influence of unionism upon earnings: *A. M. Ross.* The measurement of gains and losses: *J. N. Morgan.*

DENMARK—

*Nationaløkonomisk Tidsskrift*—

Hefte 5–6, 1947—Full employment in a period of reconstruction: *J. R. Hicks.* Traek af overvaeltiningslaeren: *P. N. Rasmussen.* Om det Danske genopbygningsproblem: *J. Gelting.*

FRANCE—

*Journal de la Société de Statistique de Paris*—

*January–February* 1948—Réflexions sur une cause possible de stérilité conjugale: l'incompatibilité sanguine par rapport au facteur RH: *P. Vincent.* Rien et l'infini: *R. Risser.* Innovations et suggestions économétriques: *V. Rouquet-la-Garrigue.*

*March–April* 1948—Le monde antique s'est-il dépeuplé: *J. Bourdon.* Le degré de précision de l'évaluation du revenu national: *M. Correard.*

*Revue d'Économie Politique*—

*July–August* 1947—La vie et la pensée de Gaëtan Pirou. (Whole number.)

*September–October* 1947—La France économique de 1939 à 1946: première partie. (Whole number.)

ITALY—

*Giornale degli Economisti e Annali di Economia*—

*November–December* 1947—Sul concetto di imposta generale: *S. Steve.* Il concetto di "equilibrio fondamentale" e le sue applicazioni pratiche: *U. Sacchetti.* Sulle matrice caratteristiche di alcuni metodi di interpolazione statistica: *V. Amato.*

*January–February* 1948—Prezzi e moneta: *L. Amoroso.* Il problema della mano d'opera nelle miniere di carbone del Belgio e l'emigrazione italiana: *F. Milone.* Il problema monetario italiano sullo scorcio del 1944: *P. Baffi.* Alcuni criteri di normalità delle distribuzioni statistiche: *L. Faleschini.* Problemi finanziari e monetari della rivoluzione e del primo impero francese: *G. Carano-Donvito.* Sensibilità degli indici di concentrazione: *E. Pizzetti.*

INTERNATIONAL—

*International Labour Review*—

*January–February* 1948—Recent social developments in Finland: *N. A. Mannio.* Vocational guidance for juveniles in the United Kingdom: *H. M. D. Parker.* Progress of health security legislation in the United States. Rehabilitation of the disabled in mining industries.

*March* 1948—Planning and nationalisation in Great Britain: I: *Herman Finer.* Vocational guidance in Belgium: *E. Lobet.*

*April* 1948—Planning and nationalisation in Great Britain: II: *Herman Finer.* Vocational guidance in the United States: *H. A. Jager.*

CC-0. In Public Domain. Gurukul Kangri Collection, Haridwar

Digitized by Arya Samaj Foundation Chennai and eGangotri



# REVENUE OF THE UNITED KINGDOM

*Net Produce in Quarters of* **1947**, *and in Financial Years ended March* 31, **1947–48, 1946–47, 1945–46, 1944–45**

(000's omitted)

| QUARTERS ended | March 31, 1947 | June 30, 1947 | Sept. 30, 1947 | Dec. 31, 1947 | Calendar year 1947 |
|---|---|---|---|---|---|
| | £ | £ | £ | £ | £ |
| Customs ... ... ... ... ... | 164,821 | 199,907 | 188,689 | 200,064 | 753,481 |
| Excise ... ... ... ... ... | 139,100 | 133,500 | 152,600 | 157,300 | 582,500 |
| Stamps and Estate etc. Duties ... ... | 50,504 | 52,543 | 55,306 | 55,250 | 213,513 |
| Other Inland Revenue Duties ... ... | 556 | 90 | 20 | 30 | 696 |
| Post Office ... ... ... ... ... | 34,800 | 33,700 | 34,180 | 38,450 | 141,130 |
| Wireless Licences ... ... ... ... | 3,560 | 2,140 | 1,830 | 3,480 | 11,010 |
| Motor Vehicle Duties ... ... ... | 36,196 | 5,755 | 4,588 | 2,986 | 49,525 |
| Profits Tax ... ... ... ... ... | 6,495 | 5,490 | 11,880 | 7,900 | 31,765 |
| Excess Profits Tax ... ... ... ... | 62,615 | 44 779 | 79,119 | 67,487 | 254,000 |
| | 498,647 | 477,814 | 528,212 | 532,947 | 2,037,620 |
| Income Tax and Surtax ... ... ... | 686,199 | 204,530 | 207,996 | 159,747 | 1,258,472 |
| | 1,184,846 | 682,344 | 736,208 | 692,694 | 3,296,092 |
| Sale of Surplus War Stores ... ... | 54,175 | 29,318 | 74,080 | 29,576 | 187,149 |
| Surplus Receipts from certain Trading Services ... ... ... ... ... | 19,000 | 20,000 | 10,000 | 46,175 | 95,175 |
| Crown Lands ... ... ... ... | 240 | 210 | 240 | 240 | 930 |
| Interest on Sundry Loans ... ... ... | 4 568 | 3,931 | 12,719 | 2,868 | 24,086 |
| Miscellaneous Receipts ... ... ... | 48,369 | 143,592 | 20,361 | 33,139 | 245,461 |
| | 1,311,098 | 879,395 | 853,608 | 804,692 | 3,848,893 |

| YEARS ended March 31 | 1947–48 | 1946–47 | 1947–48 (compared with 1946–47) | | Corresponding Years | |
|---|---|---|---|---|---|---|
| | | | Increase | Decrease | 1945–46 | 1944–45 |
| | £ | £ | £ | £ | £ | £ |
| Customs ... ... ... ... ... | 791,101 | 620,741 | 170,360 | — | 569,842 | 579,352 |
| Excise ... ... ... ... ... | 629,700 | 563,500 | 66,200 | — | 540,800 | 496,900 |
| Stamps and Estate etc. Duties ... | 228,309 | 186,382 | 41,927 | — | 145,400 | 127,898 |
| Other Inland Revenue Duties ... ... | 715 | 724 | — | 9 | 712 | 779 |
| Post Office ... ... ... ... | 143,300 | 131,000 | 12,300 | — | 115,500 | 116,600 |
| Wireless Licences ... ... ... | 11,200 | 9,940 | 1,260 | — | 5,180 | 4,820 |
| Motor Vehicle Duties ... ... ... | 49,108 | 49,456 | — | 348 | 43,172 | 28,695 |
| National Defence Contributions ... | — | — | — | — | 35,485 | 33,304 |
| Profits Tax ... ... ... ... | 36,120 | 32,107 | 4,013 | — | — | — |
| Excess Profits Tax ... ... .. | 252,568 | 325,391 | — | 72,823 | 432,130 | 477,134 |
| | 2,142,121 | 1,919,241 | 296,060 | 73,180 | 1,888,221 | 865,482 |
| Income Tax and Surtax... ... ... | 1,304,131 | 1,382,497 | — | 78,366 | 1,430,415 | 1,390,374 |
| | 3,446,252 | 3,301,738 | 296,060 | 151,546 | 3,318,636 | 3,255,856 |
| Sale of Surplus War Stores ... ... | 197,232 | 155,996 | 41,236 | — | — | — |
| Surplus Receipts from certain Trading Services ... ... ... ... | 101,261 | 59,000 | 42,261 | — | — | — |
| Crown Lands ... ... ... ... | 950 | 920 | 30 | — | 960 | 980 |
| Interest on Sundry Loans ... ... | 23,044 | 26,779 | — | 3,736 | 11,046 | 7,520 |
| Miscellaneous Receipts ... ... ... | 242,603 | 78,312 | 164,291 | — | 70,561 | 90,037 |
| | 4,011,342 | 3,622,745 | 543,878 | 155,282 | 3,401,203 | 3,354,393 |
| | | | NET INCR. £388,596 | | | |

CC-0. In Public Domain. Gurukul Kangri Collection, Haridwar

Digitized by Arya Samaj Foundation Chennai and eGangotri



## BANK OF ENGLAND

*Pursuant to the Act 7th and 8th Victoria, cap.* 32 (1844)

(000's omitted)

| 1 | 2 | 3 | 4 | 5 | 6 | 7 | 8 |
|---|---|---|---|---|---|---|---|
| ISSUE DEPARTMENT | | | | | | COLLATERAL COLUMNS | |
| Liabilities | | Assets | | | | | |
| Notes Issued | DATES (Wednesdays) | Govt. Debt (£11,015) and Govt. Securities | Other Securities | Gold Coin and Bullion† | Silver Coin‡ | Notes in Hands of Public | Minimum Discount Rate |
| £ | | £ | £ | £ | £ | £ | % |
| 1,450,248 | Jan. 1 ..... | 1,449,138 | 851 | 248 | 11 | 1,428,182 | 2 |
| 1,450,248 | ,, 8 ..... | 1,449,106 | 888 | 248 | 6 | 1,402,032 | (26.x.39) |
| 1,450,248 | ,, 15 ..... | 1,449,182 | 812 | 248 | 6 | 1,371,549 | |
| 1,450,248 | ,, 22 ..... | 1,449,250 | 743 | 248 | 7 | 1,385,567 | |
| 1,450,248 | ,, 29 ..... | 1,449,276 | 715 | 248 | 9 | 1,364,484 | |
| 1,450,248 | Feb. 5 ..... | 1,449,204 | 788 | 248 | 8 | 1,371,055 | |
| 1,450,248 | ,, 12 ..... | 1,449,234 | 760 | 248 | 6 | 1,374,620 | |
| 1,450,248 | ,, 19 ..... | 1,449,345 | 648 | 248 | 7 | 1,374,790 | |
| 1,450,248 | ,, 26 ..... | 1,449,251 | 742 | 248 | 7 | 1,375,574 | |
| 1,450,248 | Mar. 5 ..... | 1,449,349 | 641 | 248 | 10 | 1,381,418 | |
| 1,450,248 | ,, 12 ..... | 1,449,287 | 705 | 248 | 8 | 1,385,403 | |
| 1,450,248 | ,, 19 ..... | 1,449,355 | 637 | 248 | 8 | 1,386,827 | |
| 1,450,248 | ,, 26 ..... | 1,449,272 | 720 | 248 | 8 | 1,390,703 | |
| 1,450,248 | April 2 ..... | 1,449,286 | 708 | 248 | 6 | 1,399,957 | |
| 1,450,248 | ,, 9 ..... | 1,449,182 | 809 | 248 | 9 | 1,402,889 | |
| 1,450,248 | ,, 16 ..... | 1,449,313 | 680 | 248 | 7 | 1,396,530 | |
| 1,450,248 | ,, 23 ..... | 1,449,377 | 615 | 248 | 8 | 1,387,940 | |
| 1,450,248 | ,, 30 ..... | 1,449,340 | 653 | 248 | 7 | 1,387,600 | |
| 1,450,248 | May 7 ..... | 1,449,251 | 741 | 248 | 8 | 1,391,789 | |
| 1,450,248 | ,, 14 ..... | 1,449,339 | 651 | 248 | 10 | 1,390,354 | |
| 1,450,248 | ,, 21 ..... | 1,449,338 | 652 | 248 | 10 | 1,390,608 | |
| 1,450,248 | ,, 28 ..... | 1,449,239 | 752 | 248 | 9 | 1,394,118 | |
| 1,450,248 | June 4 ..... | 1,449,296 | 694 | 248 | 10 | 1,396,157 | |
| 1,450,248 | ,, 11 ..... | 1,449,204 | 786 | 248 | 10 | 1,395,452 | |
| 1,450,248 | ,, 18 ..... | 1,449,284 | 705 | 248 | 11 | 1,393,479 | |
| 1,450,248 | ,, 25 ..... | 1,449,184 | 808 | 248 | 8 | 1,395,044 | |
| 1,450,248 | July 2 ..... | 1,449,233 | 757 | 248 | 10 | 1,398,724 | |
| 1,450,248 | ,, 9 ..... | 1,449,178 | 814 | 248 | 8 | 1,403,591 | |
| 1,450,248 | ,, 16 ..... | 1,449,268 | 723 | 248 | 9 | 1,405,522 | |
| 1,450,248 | ,, 23 ..... | 1,449,326 | 667 | 248 | 7 | 1,408,267 | |
| 1,450,248 | ,, 30 ..... | 1,449,267 | 724 | 248 | 9 | 1,419,325 | |
| 1,450,248 | Aug. 6 ..... | 1,449,329 | 663 | 248 | 8 | 1,421,724 | |
| 1,450,248 | ,, 13 ..... | 1,449,372 | 617 | 248 | 11 | 1,411,772 | |
| 1,450,248 | ,, 20 ..... | 1,449,387 | 605 | 248 | 8 | 1,399,417 | |
| 1,450,248 | ,, 27 ..... | 1,449,421 | 570 | 248 | 9 | 1,393,436 | |
| 1,450,248 | Sept. 3 ..... | 1,449,356 | 635 | 248 | 9 | 1,392,413 | |
| 1,450,248 | ,, 10 ..... | 1,449,378 | 611 | 248 | 11 | 1,389,633 | |
| 1,450,248 | ,, 17 ..... | 1,449,277 | 712 | 248 | 11 | 1,382,760 | |
| 1,450,248 | ,, 24 ..... | 1,449,380 | 608 | 248 | 12 | 1,376,506 | |
| 1,450,248 | Oct. 1 ..... | 1,449,303 | 688 | 248 | 9 | 1,375,525 | |
| 1,450,248 | ,, 8 ..... | 1,449,334 | 654 | 248 | 12 | 1,374,305 | |
| 1,450,248 | ,, 15 ..... | 1,449,312 | 679 | 248 | 9 | 1,368,646 | |
| 1,450,248 | ,, 22 ..... | 1,449,375 | 618 | 248 | 7 | 1,362,509 | |
| 1,450,248 | ,, 29 ..... | 1,449,296 | 693 | 248 | 11 | 1,360,807 | |
| 1,450,248 | Nov. 5 ..... | 1,449,336 | 655 | 248 | 9 | 1,363,799 | |
| 1,450,248 | ,, 12 ..... | 1,449,314 | 673 | 248 | 13 | 1,360,239 | |
| 1,450,248 | ,, 19 ..... | 1,449,355 | 633 | 248 | 12 | 1,348,131 | |
| 1,450,248 | ,, 26 ..... | 1,449,410 | 580 | 248 | 10 | 1,340,469 | |
| 1,450,248 | Dec. 3 ..... | 1,449,356 | 633 | 248 | 11 | 1,342,650 | |
| 1,450,248 | ,, 10 ..... | 1,449,305 | 686 | 248 | 9 | 1,353,418 | |
| 1,450,248 | ,, 17 ..... | 1,449,212 | 778 | 248 | 10 | 1,363,149 | |
| 1,450,248 | ,, 24 ..... | 1,449,211 | 778 | 248 | 8 | 1,368,397 | |
| 1,450,248 | ,, 31 ..... | 1,449,273 | 718 | 248 | 9 | 1,349,732 | |

* Liable to fluctuation. † At 172*s*. 3*d*. per fine oz. ‡ From Nov. 13th "Coin other than Gold Coin."

CC-0. In Public Domain. Gurukul Kangri Collection, Haridwar

Digitized by Arya Samaj Foundation Chennai and eGangotri



## WEEKLY RETURN

*for Wednesday in each week, during the year* 1947

(000's omitted)

| 9 | 10 | 11 | 12 | 13 | 14 | 15 | 16 | 17 | 18 |
|---|---|---|---|---|---|---|---|---|---|
| BANKING DEPARTMENT | | | | | | | | | |
| Liabilities | | | | DATES (Wednesdays) | Assets | | | | Totals of Liabilities and Assets |
| Capital (£14,553) and Rest | Public Deposits | Bankers' Deposits | Other Deposits | | Govt. Securities | Discounts and Advances | Other Securities | Reserve (Notes and Coin) | |
| £ | £ | £ | £ | | £ | £ | £ | £ | £ |
| 18,091 | 10,255 | 278,923 | 57,279 | Jan. 1 ..... | 311,798 | 13,606 | 15,793 | 23,351 | 364,548 |
| 18,172 | 13,916 | 314,490 | 59,769 | ,, 8 ..... | 321,238 | 17,662 | 18,127 | 49,320 | 406,347 |
| 18,245 | 17,450 | 288,498 | 58,344 | ,, 15 ..... | 261,665 | 23,351 | 17,830 | 79,691 | 382,537 |
| 18,213 | 25,237 | 298,703 | 57,152 | ,, 22 ..... | 297,220 | 18,372 | 17,987 | 65,726 | 399,305 |
| 18,293 | 15,990 | 288,365 | 60,573 | ,, 29 ..... | 242,658 | 25,446 | 28,311 | 86,806 | 383,221 |
| 18,253 | 22,909 | 280,742 | 56,427 | Feb. 5 ..... | 247,483 | 23,662 | 26,725 | 80,261 | 378,431 |
| 18,386 | 26,246 | 274,144 | 58,143 | ,, 12 ..... | 259,683 | 21,291 | 19,233 | 76,712 | 376,919 |
| 18,414 | 11,436 | 306,341 | 55,919 | ,, 19 ..... | 283,808 | 13,787 | 18,060 | 76,455 | 392,110 |
| 18,441 | 22,401 | 285,245 | 60,122 | ,, 26 ..... | 279,388 | 15,976 | 15,249 | 75,596 | 386,209 |
| 18,459 | 9,795 | 318,950 | 96,460 | Mar. 5 ..... | 343,266 | 12,116 | 18,620 | 69,662 | 443,664 |
| 18,481 | 9,688 | 289,359 | 94,610 | ,, 12 ..... | 314,416 | 12,423 | 19,691 | 65,608 | 412,138 |
| 18,500 | 10,151 | 307,694 | 91,415 | ,, 19 ..... | 333,536 | 11,426 | 18,711 | 64,087 | 427,760 |
| 18,528 | 10,619 | 286,400 | 94,420 | ,, 26 ..... | 321,961 | 11,092 | 16,760 | 60,154 | 409,967 |
| 18,546 | 11,954 | 284,812 | 101,158 | April 2 ..... | 330,236 | 17,345 | 17,920 | 50,969 | 416,470 |
| 17,712 | 9,460 | 289,952 | 101,856 | ,, 9 ..... | 335,931 | 18,237 | 16,773 | 48,039 | 418,980 |
| 17,735 | 8,961 | 305,695 | 100,096 | ,, 16 ..... | 348,176 | 12,378 | 17,520 | 54,413 | 432,487 |
| 17,781 | 8,448 | 288,679 | 99,643 | ,, 23 ..... | 320,216 | 14,363 | 16,874 | 63,098 | 414,551 |
| 17,821 | 6,874 | 303,725 | 97,988 | ,, 30 ..... | 317,141 | 17,958 | 27,700 | 63,609 | 426,408 |
| 17,837 | 13,014 | 288,392 | 96,650 | May 7 ..... | 311,091 | 17,906 | 26,417 | 59,479 | 414,893 |
| 17,892 | 9,117 | 290,561 | 96,250 | ,, 14 ..... | 320,396 | 14,276 | 18,114 | 61,034 | 413,820 |
| 17,938 | 13,699 | 292,631 | 95,755 | ,, 21 ..... | 329,831 | 11,468 | 17,799 | 60,925 | 420,023 |
| 17,982 | 4,998 | 301,901 | 95,143 | ,, 28 ..... | 329,596 | 8,663 | 24,351 | 57,414 | 420,024 |
| 18,014 | 8,045 | 293,760 | 105,798 | June 4 ..... | 342,371 | 11,038 | 16,736 | 55,472 | 425,617 |
| 18,052 | 7,259 | 295,770 | 93,552 | ,, 11 ..... | 324,805 | 16,303 | 17,245 | 56,220 | 414,633 |
| 18,088 | 10,296 | 299,648 | 92,504 | ,, 18 ..... | 333,306 | 10,751 | 18,057 | 58,422 | 420,536 |
| 18,110 | 8,036 | 290,266 | 98,296 | ,, 25 ..... | 319,151 | 20,625 | 17,883 | 57,049 | 414,708 |
| 18,179 | 8,504 | 318,249 | 94,960 | July 2 ..... | 350,991 | 17,730 | 17,670 | 53,501 | 439,892 |
| 18,206 | 8,804 | 293,207 | 96,385 | ,, 9 ..... | 328,016 | 22,243 | 17,602 | 48,743 | 416,604 |
| 18,236 | 9,515 | 303,901 | 93,810 | ,, 16 ..... | 339,051 | 21,384 | 18,135 | 46,892 | 425,462 |
| 18,275 | 8,039 | 295,465 | 95,312 | ,, 23 ..... | 331,741 | 24,317 | 17,678 | 44,255 | 417,991 |
| 18,314 | 11,337 | 301,789 | 95,053 | ,, 30 ..... | 336,066 | 28,552 | 28,505 | 33,370 | 426,493 |
| 18,350 | 18,275 | 279,649 | 95,804 | Aug. 6 ..... | 334,995 | 18,975 | 27,153 | 30,955 | 412,078 |
| 18,382 | 16,240 | 294,889 | 93,354 | ,, 13 ..... | 342,571 | 20,710 | 18,741 | 40,843 | 422,865 |
| 18,414 | 12,742 | 301,311 | 93,761 | ,, 20 ..... | 332,656 | 22,776 | 17,490 | 53,306 | 426,228 |
| 18,441 | 14,041 | 282,032 | 93,396 | ,, 27 ..... | 308,126 | 16,636 | 23,876 | 59,272 | 407,910 |
| 18,478 | 12,485 | 292,305 | 94,267 | Sept. 3 ..... | 319,367 | 19,886 | 17,909 | 60,373 | 417,535 |
| 18,491 | 12,762 | 291,554 | 95,394 | ,, 10 ..... | 320,647 | 16,697 | 17,834 | 63,023 | 418,201 |
| 18,504 | 9,607 | 290,630 | 93,645 | ,, 17 ..... | 312,425 | 12,384 | 17,729 | 69,848 | 412,386 |
| 18,535 | 16,227 | 289,579 | 92,109 | ,, 24 ..... | 307,495 | 14,578 | 18,379 | 75,928 | 416,450 |
| 18,547 | 9,703 | 297,430 | 94,901 | Oct. 1 ..... | 301,520 | 14,477 | 27,655 | 74,929 | 420,581 |
| 17,703 | 12,335 | 287,970 | 92,239 | ,, 8 ..... | 303,510 | 9,970 | 18,607 | 78,160 | 410,247 |
| 17,720 | 11,457 | 295,764 | 94,590 | ,, 15 ..... | 310,570 | 5,838 | 19,383 | 83,740 | 419,531 |
| 17,755 | 9,355 | 297,090 | 95,531 | ,, 22 ..... | 304,202 | 6,264 | 19,565 | 89,700 | 419,731 |
| 17,811 | 13,800 | 288,782 | 95,855 | ,, 29 ..... | 287,462 | 5,889 | 31,476 | 91,421 | 416,248 |
| 17,847 | 13,055 | 288,664 | 96,482 | Nov. 5 ..... | 294,380 | 5,714 | 27,579 | 88,375 | 416,048 |
| 17,864 | 13,653 | 297,736 | 94,554 | ,, 12 ..... | 304,140 | 7,266 | 20,592 | 91,809 | 423,807 |
| 17,907 | 11,032 | 308,978 | 91,831 | ,, 19 ..... | 301,258 | 5,161 | 19,450 | 103,879 | 429,748 |
| 17,950 | 14,025 | 292,460 | 93,332 | ,, 26 ..... | 278,473 | 4,451 | 23,598 | 111,245 | 417,767 |
| 17,978 | 19,320 | 291,419 | 94,329 | Dec. 3 ..... | 292,423 | 2,715 | 19,030 | 108,878 | 423,046 |
| 17,999 | 18,898 | 294,235 | 92,944 | ,, 10 ..... | 290,721 | 16,215 | 19,329 | 97,811 | 424,076 |
| 18,043 | 12,368 | 303,996 | 93,457 | ,, 17 ..... | 316,374 | 4,886 | 18,942 | 87,662 | 427,864 |
| 18,087 | 17,065 | 303,984 | 93,387 | ,, 24 ..... | 322,059 | 9,961 | 18,230 | 81,653 | 432,523 |
| 18,130 | 18,564 | 315,050 | 95,472 | ,, 31 ..... | 311,121 | 15,171 | 20,146 | 100,778 | 447,216 |



CC-0. In Public Domain. Gurukul Kangri Collection, Haridwar

Digitized by Arya Samaj Foundation Chennai and eGangotri

CC-0. In Public Domain. Gurukul Kangri Collection, Haridwar

Digitized by Arya Samaj Foundation Chennai and eGangotri

Vol. CXI.] [Part II.

# Journal of the Royal Statistical Society

SERIES A (GENERAL)

PART II, 1948

---

## Cost of Living Subsidies

[A Discussion before the Royal Statistical Society held on January 20th, 1948, the President, Dr. David Heron, in the Chair]

Opened by Professor J. H. Jones

It is my privilege to open a discussion upon one of the most controversial questions of the day. Clearly my first task is to define the terms of the discussion. A subsidy is a payment—direct or indirect—received by one person without return and made by another person who gives without return. To the latter it represents a burden; he would be better off if no such payment were made. This point is important. Differential prices may, and sometimes do, denote the existence of a subsidy. Perhaps the outstanding example is to be found in the pre-war practice of the Westphalian Coal Syndicate, which charged high prices in non-contested areas and low prices in competitive areas. But the practice of railway companies shows that differential rates do not necessarily indicate the payment of subsidies. Again, there are cases in which a uniform price may conceal a subsidy, illustrations being found in the Post Office system of charges and in the policies of publicly owned electricity undertakings. The essence of a subsidy is that it represents a gain to somebody at the expense of somebody else; in that respect it differs from the differential payments based upon the principle of charging what the market will bear, subject to a minimum determined by specific costs.

In the present discussion we are asked to confine our attention to cost of living subsidies introduced during the war for a purpose to which I shall presently refer. But these are not the only public subsidies now existing. Some (which I shall call social subsidies) are employed in normal times for the purpose of reducing inequalities in the standard of living. They include the contribution made by the State to Health and Unemployment Insurance and other social services. They also include payments made before the war by public authorities to enable milk to be supplied at a relatively low price to children at school. Subsidies may also be used as part of the general economic policy of a country for the purpose of stimulating production. These (which I shall call economic subsidies) may be regarded as alternatives to tariffs in a system of protection, pre-war examples being the subsidy on sugar beet production and the subsidy granted upon tramp shipping. Finally a subsidy of an emergency character may be granted for the purpose of maintaining a price structure which it would be undesirable to disturb. Thus, for example, a change in the price of steel during a war would necessitate the adjustment of hundreds of engineering contracts based upon that price, for which reason it is deemed better to maintain a constant price and meet a rise in cost by the payment of a subsidy.

The purpose of cost of living subsidies, which form the subject of our present discussion, is to maintain a more or less unchanging cost of subsistence at a time of extreme scarcity, when prices in a free market might have risen to such a height as to produce serious consequences. They were introduced as an emergency measure, and will therefore presumably disappear when so-called normal conditions return. They form part and parcel of a wider system of control. Being introduced to meet an emergency it would appear that the discussion should be concerned with two main points, the first being whether they fulfilled the purpose for which they were designed,



CC-0. In Public Domain. Gurukul Kangri Collection, Haridwar

Digitized by Arya Samaj Foundation Chennai and eGangotri



and the second whether they have now served their purpose and therefore whether, if they are retained, they are likely to create fresh difficulties. We all know that institutions tend to outlive their utility.

I have submitted two statements that call for further comment. The first, in effect, is that cost of living subsidies should be distinguished from economic subsidies, while the second is that cost of living subsidies are bound up with the system of control. In view of the fact that both groups of subsidies are largely concerned with agricultural products they are apt to be confused, nevertheless they represent two distinct types. Economic subsidies are subsidies to producers for the purpose of enabling them to compete with products imported from abroad and sold at world prices. They do not interfere with the price mechanism; they do not favour the consumer; they form part of the general system of protection and, like tariffs, seek to influence the location of an industry. Cost of living subsidies, on the other hand, seek to guarantee to the consumers prices below those that would have prevailed in the absence of such subsidies. Thus they necessitate some form of price control ; they involve interference with the price mechanism. But price control (with its corollary, the control of distribution) does not involve subsidies. Thus we need to distinguish not only between economic subsidies and cost of living subsidies, but also between controlled prices and subsidized prices—between the whole and one of its parts. This distinction is important, for in recent discussions blame—if blame it be—that should have been attributed to price control has been attributed to subsidies.

During a war a large proportion of the industrial population, previously engaged in the production of capital goods and consumer goods and services, either join the fighting forces or are engaged in the production of war equipment. The result is a fall in the supply of consumer goods and services. In a self-contained community it is by no means inevitable, in theory, that the fall in supply should be followed by a rise in the general price average, for the surplus currency might be taken by the Government and used to pay the cost of waging war. In practice, however, inflation takes place; Government receipts from taxation and loans are behind the clock, and the community finds that the total purchasing power is increased. Not only are individual price relationships of consumer goods changed but the price average is raised. In the absence of some form of control the prices of the necessaries of life threaten to rise more rapidly and farther than the prices of non-essentials. and the prices of non-durable commodities threaten to rise more rapidly than the prices of durable commodities. The rise in prices may take place even more quickly in a community that is dependent upon imports for the means of existence. The Government, therefore, steps in, establishes a system of price control and rationing, and fixes the prices of essentials at points related to pre-war costs. The currency released by the system of control is added to that previously spent upon uncontrolled commodities, the prices of which reach higher points than they would have reached in the absence of control. Thus the system of control results in the creation of two distinct price averages and the conception of a "general price level" loses its significance. Moreover, the disparity between the two price averages is affected by the degree of inflation that has already taken place.

The danger presented by this situation arises from the reluctance of the working members of the community to accept the inevitability of a fall in the standard of living at a time when they appear to enjoy greater economic power than in time of peace. Nearly every group seeks to secure its own position, if necessary at the expense of other groups, and the Government is faced with the threat of serious and continuing inflation. Cost of living subsidies are introduced for the purpose of controlling, if not preventing, such inflation, while, at the same time, the process of control over price and distribution is carried a stage farther. One effect of this process is to increase the disparity between the controlled (and subsidized) price average and the uncontrolled price average, but since the latter becomes progressively less important, it is assumed that the policy will achieve its main purpose, which is that of controlling inflation. But subsidies involve heavy expenditure, and the Government must secure the necessary addition to income. This in turn necessitates further inflation, so that essentially the method of the Government is to inject some additional inflation for the purpose of preventing a still larger and more continuous inflation: it is the method of inoculation.

Be it true or false I should like to make my argument clear. When subsidies were introduced during the war they were regarded as an emergency measure for the purpose of controlling wartime inflation in so far as this might be due to advances in wages and costs. Their cost represented

CC-0. In Public Domain. Gurukul Kangri Collection, Haridwar

Digitized by Arya Samaj Foundation Chennai and eGangotri



marginal expenditure, against which should be set the marginal income of the Government. This income was secured from marginal loans, which, in turn, were inflationary. But it was held that such expenditure prevented far greater expenditure upon wages and costs, and thereby prevented a more serious inflation that that which actually occurred. The war is now over, and although shortages continue we have to contemplate a possible, even probable, reversal of the process. Sooner or later the supply of commodities will be increased and a more generous standard of comfort will come within reach. The Government will then be faced with two alternatives. It may either retain the subsidies or abolish them by stages.

Here again we need to distinguish between price control and the payment of subsidies. So long as shortages remain acute it is desirable and probable that the practice of controlling prices will continue. But control may have serious effects upon the distribution of industry and the rate of growth of its many parts. So long as labour itself was effectively controlled, people could be directed to those industries to which priority was given and the desired distribution of industry thereby secured. But when the war came to an end labour was released. The control of some prices and the absence of control over other prices meant that in the former costs were severely restricted and wages could not easily be made attractive. The absence of control over other prices meant that these were relatively profitable, higher wages could easily be paid and workers tended to choose such industries in preference to the first group. Yet the first consisted of those industries that were more essential, and in which growth was more urgently needed. Thus the growth of the essential industries was held in check and the apparent need for control was perpetuated. For, in practice, it is almost as difficult to adjust controlled prices to the requirements of the time as it would be to decontrol them altogether. This is one dilemma of control; while its purpose is to tide over a temporary period of difficulty, it tends to be not self-eliminating but self-perpetuating. The under-manned essential industries tend to remain under-manned, while the unimportant industries tend to grow too rapidly under the influence of relatively high wages and profits. The Government has now recognized this difficulty and re-established a measure of control over labour, but it is of so mild a character as to prove far less effective than other forms of control might be in restoring the necessary balance of industry. In due course, however, even the supply of controlled commodities will increase.

I return to the discussion of subsidies, which should be considered in the light of the above paragraph. If, as supplies increase, the Government retains the subsidies in their present form and amount, for the purpose of preventing an apparent rise in the cost of living, the subsidies will need to be paid upon larger quantities, and the total burden, already approaching £400,000,000 per annum, will be correspondingly increased. This will not in fact prevent the cost of living from rising, for living itself will become more generous; people will be able to buy more of the necessaries of life, and will therefore be paying more for them. Since living will become more expensive, because it will be better living, workers will complain that the cost of living is actually rising, and in consequence may still demand a rise in wages and salaries. Moreover, the increasing burden of subsidies following upon an increase in supply will add to the burden of taxation; and if this burden has to be shouldered by indirect taxation the pressure for a rise in wages will be correspondingly increased. If, on the other hand, the burden has to be borne by direct taxation, the problem of incentive may become even more acute that it is at the present time.*

The alternative is to reduce by stages, and ultimately abolish, cost of living subsidies as distinct from economic subsidies. In that case not only will the supply of available commodities increase, but their prices per unit will rise, with the result that the cost of living will rise more rapidly and to a higher level than would be the case if subsidies became a permanent feature, and we should be faced, once more, with the so-called vicious spiral of wages and prices. I confess that I am less disturbed than some people by this so-called spiral. During war it can be very dangerous, for the advances in wages and costs bring no gain in the form of a higher standard of living. The goods

* It has been argued that when supplies are increased both costs and prices will be reduced, and that the reduction in costs will reduce the need for subsidies. This might well be the case if we were dealing with factory conditions, but the subsidies are to be found mainly in the agricultural industry, broadly interpreted, and in this industry an increase of supplies is not usually associated with a reduction in costs. Nor is there any indication that, in the near future, much relief is to be expected from a fall in the prices of imported foodstuffs. We must be prepared for the probability that if the subsidy system is maintained in its present form the burden will be increased as rationed and subsidized commodities become mere plentiful.

CC-0. In Public Domain. Gurukul Kangri Collection, Haridwar

Digitized by Arya Samaj Foundation Chennai and eGangotri



simply do not exist, and the hunt for a higher standard of living is in vain. When, however, scarcity gradually gives way to plenty, living conditions will improve whether wages are raised or not raised. In practice the spiral is a diminishing one, and may merely represent the diffusion and completion of an inflationary process that has already taken place, but has not fully worked itself out. The experience of this country after the first World War and the experience of the United States of America during the past two years suggest that the danger of serious inflation becomes acute during the process of decontrol and the restoration of a free price system. Control is the product of the failure of relatively high prices to attract larger supplies and it becomes superfluous when the elasticity of supply is restored. But control itself fails to attract supplies in a market otherwise free, for it may be assumed that a controlled price, being closely related to costs, is a relatively low price. It is for this reason that control tends to perpetuate a shortage and thereby to prolong its own existence. It follows, too, that when decontrol does take place it produces a rise in prices. If, immediately before decontrol, the controlled prices were also subsidized prices, the rise in prices will be correspondingly greater and the danger of inflation through a rise in wages and costs correspondingly more serious.*

It may thus be suggested that, assuming the restoration of the free price system to be desirable, subsidies should be abolished before control is removed. In each individual case the free market should be reached by two stages.

My argument appears to lead to the conclusion that, as in war, subsidies, so far from fostering inflation, actually support price control as a measure for holding inflation in check. For the main channel of inflation is through wages and costs. Control of the prices and distribution of the relatively scarce necessaries of life maintains a relatively stable cost of living and thereby reduces the pressure for advances in wages; subsidies, by reducing the controlled cost of living below that which would otherwise prevail, further reduces that pressure. But the argument ignores the growing effect of uncontrolled prices upon that same pressure as the supply of uncontrolled commodities increases. We have already seen that such prices are higher than they would have been in the absence of control. Moreover, one effect of control is to create a Black Market, which grows in importance as the war recedes, administration and enforcement are weakened, and impatience and resentment are strengthened by disappointed expectations. In spite of price control and subsidized prices the pressure for advances tends to be maintained if not actually strengthened. We need to distinguish, however, between the effect of control and subsidies as such and the effects produced by disappointment and the difficulties of administration and enforcement.

The difficulty of reaching a simple and confident conclusion is not removed if we approach the subject from the side of public finance. When everybody's somebody then no-one's anybody. When everybody's subsidized, who then pays the subsidy? The price of shoddy had indeed gone up, but is it true to say that subsidies carry a heavier responsibility than that already indicated? They intensify the disparity between the controlled and uncontrolled price averages. Do they also create or strengthen an inflationary pressure from the Treasury end? During the war the body economic was largely protected from serious inflation by the inoculation of a mild dose of inflation represented by the subsidies. Is it possible, by repeated inoculation, to produce the same result in future? Our difficulty in finding the answer to this question lies in the fact that it is impossible, in practice, to extract one form of expenditure and deal with it in isolation.

The cost of living subsidies, introduced to meet the emergency of war, form part of the total annual expenditure of the Government. This total expenditure is financed mainly from taxation but also, for the present, partly from loans. We have therefore to consider two marginal items, or in other words, two systems of priority, one on the side of expenditure and the other on the side of income. If we assume subsidies and loans to be the marginal items or the first to be abolished we reach the simple conclusion that subsidies are financed from loans. If, moreover, we assume that the last block of loans fosters inflation, it may reasonably be argued that the direct inflationary effect of subsidies is becoming more important, and that their indirect effect as a check upon inflation is becoming less important. But we do not know whether the Government and those who decide its policy would accept the view that the cost of subsidies represents the marginal

* I may add that I relate the term inflation to normal prices, based upon costs, not to market prices, which may only reflect scarcity and bear no relation to costs.

CC-0. In Public Domain. Gurukul Kangri Collection, Haridwar

Digitized by Arya Samaj Foundation Chennai and eGangotri



item of expenditure. There are many who hold the view that cost of living subsidies should be an integral and permanent part of the social system of the future, and that public expenditure as a whole should be adjusted to meet that situation. By such people they may be regarded as more valuable than housing subsidies, the benefits of which are enjoyed only by a relatively small proportion of the population, or more valuable than so-called children's allowances, which offer no guarantee of benefit to children. Thus we are thrown back upon two separate though connected discussions, one being the place, if any, of cost of living subsidies in the list of social services, the other being the limits of total expenditure and the effect upon the economic system of expenditure beyond those limits. The first is a matter of personal judgment and choice ; it presents a political problem and a problem that we may be called upon to face in the near future. I believe that some economists have been too ready to assume that cost of living subsidies are regarded merely as emergency measures that have now served their purpose. Personally I hope that this assumption will be justified by events. It so happens that I strongly dislike the present scheme of children's allowances, the cost of which has merely added to the difficulty of financing schemes that would bring real benefit to children. But I am apparently one of a minority. Economists may prove to be in a minority on the subject of subsidies. Emergency measures rarely disappear without leaving their mark upon the social structure.

I have travelled along a winding road to the centre of the real discussion, which is the discussion of total government expenditure. There is a limit beyond which taxation injures incentive and thereby reduces the real income of the community. When that limit has been passed, public expenditure, irrespective of its purpose, produces inflation as a method of restoring incentive. There is no escape to be found by reducing direct taxation and increasing indirect taxation. The existing rate of indirect taxation is bearable and borne, at existing wage rates, because the avenues of private expenditure are so few and so narrow. When they increase in number and become broader the burden of the present rate of taxation will become intolerable and produce an irresistible demand for advances in wages. The resulting rise in prices will reduce the total real expenditure of the Government, including the relative money contribution to subsidies. If these were restored the process would be repeated. But expenditure in respect of public debt is fixed, so that the process, though largely repeated, would not complete the cycle. I need not elaborate the well-known argument to an audience of experts. It is sufficient to repeat that total public expenditure beyond the limit at which it encroaches upon incentive to the extent of reducing real income becomes inflationary and therefore self-destructive. Within that limit the forms of expenditure are a matter of choice. I believe that we have already far exceeded the limit of total recurring public expenditure that can be maintained from a total national money income based upon existing wage rates and costs of production. I therefore believe that in any case we are faced with the prospect of further substantial inflation, which will provide the true parallel with the long term fall in the value of money after 1914 and impose a similar strain upon industrial relations. Then will come the real test of government financial policy. I believe that financial prudence dictates the elimination of subsidies by stages, though rapid stages, without further delay, while consumer's choice is strictly limited and price control remains necessary. In that way future inflation will be more easily controlled and held within the limit dictated by the need to restore full incentive. Failure to do so will extend that limit and ultimately subject industrial relations to added strain. But in reaching that practical conclusion I assume cost of living subsidies to be the marginal recurring public expenditure other than abnormal military expenditure financed from loans. Others may reject that assumption and express a preference for real reductions, achieved through inflation, in other fields of expenditure. If, however, they agree with my simple financial argument I am content.

Mr. GEORGE WOODCOCK: There is one thing we can say of the present author—that he is always understandable. More than that, he is extraordinarily understanding of the problems with which we are concerned.

I should like to put briefly the view which the Trade Union Movement of this country has taken on subsidies. It is true, as Professor Jones has said, that they were introduced first in 1940 for the purpose of imposing a restraint on wage movements. It was clearly understood by the Government and by the T.U.C. itself that if the cost of living were constantly to rise during the

CC-0. In Public Domain. Gurukul Kangri Collection, Haridwar

Digitized by Arya Samaj Foundation Chennai and eGangotri



war it would be impossible in this country to restrain the trade unions, who would become increasingly powerful in the course of the war, from pressing their demands for wage advances. If the trade union movement were differently constructed, if the whole country were differently governed, that danger might not have arisen, but our trade unions are voluntary associations. It occurred to us in 1939 that it would be good policy on the part of the Government to make an expenditure from public funds for the purpose of keeping down the prices, at least of those commodities which entered into the calculation of the Ministry of Labour's cost of living index.

But cost of living subsidies have another purpose, which Professor Jones has not mentioned. An effective rationing system must be supported by subsidies, or some sort of price control, which seems to me to involve subsidies. While, theoretically, you allow each person to purchase a certain amount of butter or tea, unless he can in fact purchase his full scale of rations your rationing system breaks down and you have a black market. Therefore subsidies have that additional purpose.

I accept, with some slight qualification, Professor Jones's remark that financial prudence dictates the elimination of subsidies by stages. He says "rapid stages," and the qualification I would make concerns that word "rapid," and also the phrase "without further delay." It is abundantly clear, to me at any rate, that if subsidies were removed very quickly there would be a very substantial rise in the price of the items which enter into the calculation of what now is the index of retail prices, and it would be impossible to restrain the trade unions in their demands for higher wages, not only because the cost of living had increased, but because they would feel that there had been some breach of confidence: that the restraint which they had maintained throughout the war had been in a sense discarded on the other side. Thus they would feel themselves free and encouraged to act as they pleased. In other words, they would assume that a Government which proceeded rapidly at this time to cut down cost of living subsidies was actuated irresponsibly and might justifiably be paid back in the same coin.

I think, therefore, the cost of living subsidies must be continued for a time. The question is the amount. It is possible, and probably desirable, to do a little of what I may call juggling here. I understand that the Government does not intend to increase the 400 million pounds spent on subsidies. They would like to cut down that total to some extent, but are prepared to keep it round about that figure. They can keep the total subsidies at about the present figure, even though costs are rising in this field of subsidized commodities, without provoking any demand for increased wages. If there is an increase in the index of retail prices there will be certain automatic increases under collective agreements already made. These will certainly take place unless the Unions adopt the unprecedented course of saying that they do not want increases under agreements already made.

But apart from that, a certain amount of juggling is possible without provoking wage increases. I should not like to say how the juggling can be done, but—and this is the most serious omission from Professor Jones's paper—much of the expenditure on cost of living subsidies is due to increases in prices of commodities which we buy abroad, and the increase there has been very great. There must come a time—how soon nobody knows, because it is not purely an economic matter, but a matter of crops and seasons—when world prices will begin to move down. Then, I think, we shall save on the subsidies. For example, Russia at the present time could throw into the world pool all the wheat of which they say they have a surplus as a result of the last crop. This would bring about an enormous fall in prices and would save the Government a considerable sum of money.

That is my real disagreement with Professor Jones's paper—that it does not deal with the effect upon the total subsidies of the increase in prices which has taken place in the world at large. My view is, therefore, that we have not reached the point at which it would be wise and practicable to do away with subsidies. We may to some extent juggle with them, and I do agree that when they are reduced they will have to be reduced in stages, but I do not think the time for that adjustment has yet come.

Mr. J. R. Bellerby: It gives me peculiar pleasure to be here to-night for several reasons. I was one of the very fortunate people who received their first introduction to economics through Professor Jones, and I have listened to-night to his typically lucid paper with especial interest, and with a considerable feeling of nostalgia for the times when discussions such as these were the exhilarating accompaniment to every day's work. One thing I remember from those times is that a sure way to get a gamma minus from our professor was to express too close an agreement with his own thesis! But he makes it extraordinarily difficult to get high marks on that score to-night. I find I certainly have to agree with the opening analysis, and particularly with the definitions and the convenient division of the various types of State payment into social subsidies,

CC-0. In Public Domain. Gurukul Kangri Collection, Haridwar

Digitized by Arya Samaj Foundation Chennai and eGangotri



economic subsidies and cost-of-living subsidies pure and simple. I would, however, ask a question which I myself find very difficult to answer: just how far can the £400 million, which is given as the usual figure for the amount of subsidy, be regarded as essentially a cost-of-living subsidy?

In the first place there is an amount of about £50 million which is a form of survival from a pre-war situation. At the beginning of the war something like that sum was being paid as Customs and Excise duty on goods, and although the first subsidies had merely the effect of cancelling out the £50 million, they were recorded as subsidies without being shown in relation to the offsetting taxes. Since these taxes still remain it seems that the net subsidy level might more reasonably be stated as about £350 million, as against the £400 million.

Then there are several items which, I think, would come under Professor Jones's "social subsidy" category, for instance, the payments for the two milk schemes—the National Milk scheme and the Milk-in-Schools scheme—together with the net cost of the Vitamin scheme. These amount in total to about £30 million. School meals are not included in the figure. Under the old cost-of-living index the payment of the £30 million had no effect whatever on the movement of the index. But under the new index we have a different position in which changes in the price for national milk and school milk do have an influence on the index, so that it is rather difficult to decide how far the £30 million is to be included as a cost-of-living subsidy or should be regarded as one of the more social types of subsidy.

As regards "economic subsidies," a considerable amount is paid to cheapen feeding stuffs and fertilizers to the home farmer. In addition there are acreage payments on wheat and potatoes, and the sugar subsidy. The purpose of these is at least partly to stimulate production and therefore they answer to Professor Jones's definition of "economic subsidies," though, of course, they do also help to reduce the cost of living. Then on certain foods, like eggs and meat, considerably more subsidy is being paid on home produce than on imports; and the excess, I think, would be classed as economic or protective. It is difficult to assess the proportion of all these subsidies which should be regarded as primarily economic, but the further amount to be added would probably be not less than £60 million.

Another type of payment might be included as a sub-classification of Professor Jones's social subsidies, namely, that which goes some distance towards assisting rationing control. I do not think I should agree with Mr. Woodcock that subsidies are necessary to price control and to rationing in all cases, but there are instances where the effect of the subsidy is to make it easier to secure supplies from the farm and therefore to get more for the ration. Many people grumble that not sufficient eggs are brought through the official channels, but it is questionable whether anything like the present amount would be secured if the subsidy were not there to raise the price to the farmer very substantially above the ordinary retail price. The high price paid to the farmer for milk has a similar effect.

Then we have the seasonal subsidy: in particular, a very much higher price is paid for winter milk than for summer, in order to get an even supply throughout the year.

Lastly, there is this further important point, that when overseas prices begin to fall, as the last speaker has suggested, the protective element in every subsidy will become greater. Although subsidies as a whole may decline, what remains of them will be of a much more economic or protective type than previously; and the cost may be extremely high in view of the four-year price guarantee to home farmers for their main products.

It is conceivable, therefore, that out of the £400 million there might still be well over £200 million (including the £50 million I mentioned at the beginning) which could be regarded as economic, social or administrative and not as purely cost-of-living subsidy. The thought I have chiefly in mind in these comments is that there may be need for examining each subsidy independently before deciding how to treat it. Subsidies have been reduced in number so that they now apply to only a relatively small group of foods, and those which remain serve such a wide range of purposes that it seems scarcely possible to apply a uniform policy to all of them.

On the more general point, I should like to agree wholeheartedly with Professor Jones that the main operative factor in inflation is not the price level but the cost level, and that when we are considering subsidy policy it should be judged directly by its effect on costs rather than prices. At the moment, though, I should have thought that such a premise might lead to the conclusion that it would be sound to keep the subsidy level fairly steady. From the Public Accounts there does not seem to be any likelihood of serious difficulty in balancing the Budget, even with subsidies at their present high level. If that is so, there are two possible policies which do not involve recourse to new loans or a change in direct taxation. One is to hold the present position, with subsidies as they are, and with low prices for essential commodities and higher prices for the less essential; and the other is to reduce the subsidies, put up the prices of essentials, and bring down purchase taxes, with a reduction in the price of controlled less-essential goods. It is a matter of opinion, but I should have thought that the second of these policies was more likely to have an

CC-0. In Public Domain. Gurukul Kangri Collection, Haridwar

Digitized by Arya Samaj Foundation Chennai and eGangotri



effect on wages and costs, forcing them up more rapidly than otherwise. Therefore, I think my opinion would be in favour of keeping subsidies pretty well at their present level.

But frankly, the essential thing to my mind is still the wages level. If nothing can be done to influence this the situation seems to me practically hopeless, in the sense that we shall not have a remedy for inflation until it is possible to bring the regulation of wages as an integral part into the national planning system.

Professor R. G. D. ALLEN said that this was clearly a very important and topical subject. He was glad that the Society had asked Professor Jones to open the discussion, and that Mr. Woodcock and Mr. Bellerby had continued it from different angles. What he himself wished to say concerned the sections of the paper which they had not dealt with to any great extent. He would look at the subsidies from the point of view of public finance and consider their deflationary and inflationary character. He found himself taking a rather simple view, which seemed to him to dodge the difficulty which Professor Jones had mentioned towards the end of his paper about the marginal question. He also felt that Professor Jones's inclusion of subsidies as part of the public expenditure might not be altogether a right one for some purposes. He himself liked to think of subsidies as indirect taxes. He thought they would all agree that one of the big problems to-day was to develop a deflationary policy which would be broad and well-rounded. Part of this policy, he thought, would naturally be a budget surplus in the economic sense, and not only in the sense of accountancy. But the extent to which a budget surplus would be deflationary depended on how the surplus was achieved. It might be achieved by reducing expenditure or it might be achieved by increasing taxation, particularly indirect taxation. He did not think there were any great complications if the surplus was achieved by cutting expenditure. On the other hand, if the surplus was obtained by increasing indirect taxation, then the deflationary element in the budget surplus would obviously be offset to some extent by other factors—the disincentive effect of the increased taxation, the pressure for wage increases, and so on. It seemed to him that the reduction in subsidies would be better considered as equivalent or similar to increasing indirect taxes rather than cutting public expenditure. It was a matter of some doubt whether, as with indirect taxation, a reduction in subsidies would have a full deflationary effect.

If it came to a choice between higher indirect taxation and reduced subsidies, there were all kinds of things which could be said. He would put forward one point which he thought had some relevance, namely, the effect on the new index of retail prices as compared with the old cost-of-living index. He thought he could summarize the position very simply by saying this: as compared with the old cost-of-living index, the new interim retail prices index was less sensitive to reductions in subsidies—that is to say, if there was a reduction, for example, of £100 millions in subsidies, the old index would have risen more than the new index would rise now. On the other hand, the new index was more sensitive to changes in indirect taxes of the kind now levied on tobacco, beer, spirits, and so on. This might indicate a preference for reducing subsidies rather than increasing indirect taxes. That was one consideration, and he did not know how important it would be. But there were many other considerations. He thought it could be said that the ordinary worker did not look only—indeed if at all—at an index of prices changes; he was perhaps more apt to look at his wife, who might feel that the increasing cost of eggs was more important than the rising price of cigarettes. But it was a point to take into account.

Mr. E. C. RAMSBOTTOM said that although he had at one time had some official connection with these matters, he had now attained greater freedom, and could accordingly speak only from the point of view of an ordinary man in the street, rather disturbed at certain aspects of this question of the subsidies.

Mr. Woodcock had put the position fairly and clearly. The cost of living subsidies were introduced in the first place with a definite purpose which was plainly stated by the then Chancellor of the Exchequer in his Budget speech of April, 1941. He made it clear that the purpose as envisaged at that time was to stabilize the cost of living and thereby, as he said, to create conditions which would enable the wages situation to be held about where it was then. He said that by that means he hoped to avoid the inflationary increases in costs of production which would result from continually rising prices and wages. The Chancellor actually went on to give a warning that if, notwithstanding this policy of subsidies, the rising tendency in wage rates should continue, it would compel the abandonment of the whole stabilization policy.

In view of that declaration, it was interesting to reflect on what had happened since that time. At that date (April, 1941) the Ministry of Labour index of wage rates stood at about 20 per cent. above the level of September, 1939. It was true that, for some time after that announcement of the subsidy policy was made, the rise in wage rates—which had been going on at an average of something like 1 per cent. a month—was slowed down. But it was never halted, and from that

CC-0. In Public Domain. Gurukul Kangri Collection, Haridwar

Digitized by Arya Samaj Foundation Chennai and eGangotri



time onwards the Ministry of Labour index of wage rates continued to rise, throughout the war, at a monthly average rate of something like one-half of one per cent. Since the end of 1945 that rate of increase had been almost doubled, and the latest wage index figure published by the Ministry, relating to the end of November, 1947, was 73 per cent. above the pre-war level.

That was not the whole tale, because that figure definitely understated the full rise in wage rates. The Ministry of Labour had been careful to explain that their index was based mainly on a comparison of collective agreement rates in operation before the war and at each subsequent date. Under the Conditions of Employment and National Arbitration Order, made during the war, collective agreement rates became mandatory throughout the industries to which the agreements applied, with the result that substantial fringes of workpeople, in most industries, who had formerly received less than the agreed rates of wages were now receiving the agreed rates. Moreover, that figure of 73 per cent. applied to weekly wage rates. The normal hours of the working week were now mostly 44 or 45, as compared with 47 and 48 before the war. When allowance was made for this the average hourly wage rates would appear to have increased by not far short of 100 per cent. It was noteworthy that the figures of average earnings in the manufacturing industries, published by the Ministry of Labour for April of last year, showed for hourly earnings an increase of about 100 per cent. above the pre-war level.

Looking at those figures the man in the street saw that whereas the subsidies which were introduced with a view to stabilizing wage rates now amounted to £400 million, weekly wage rates had in fact risen from 20 per cent. to 70 or 80 per cent. and hourly rates to about 100 per cent., above the pre-war level.

In face of those figures it could not be claimed that the object for which the subsidies were adopted had been achieved. It might, of course, be argued that the increase in wage rates would have been greater if there had been no subsidies. That was a point on which it would be interesting to have the opinions of Professor Jones and other economists; but had not the main factor in the rise of wage rates during the war been the great demand for labour coupled with the severe shortage of labour rather than the increased cost of living? Cost of living considerations were no doubt present, in many cases, as a contributory factor in the minds of workpeople when they claimed increases in wages; but it seemed to the speaker probable—though he spoke with diffidence in the presence of expert economists—that the great shortage of labour had been the decisive factor, and he was inclined to doubt whether the rise in wage rates would have been very much greater even if there had been no subsidies. That was clearly an important question in connection with the problem whether it was desirable that the subsidies should be continued or whether they should now be abolished or reduced.

Mr. Woodcock had argued—and he was an expert in these matters whose opinion carried great weight—that if the subsidies were abolished the cost of living would rise and further increases in wage rates would then have to be given. The speaker would attach importance to that argument if he could be convinced that, in the event of the subsidies being maintained, present wage rates would not have to be further increased. As he saw the position, increases in wage rates were still occurring in this or that industry, further claims were being made, and in a number of important industries negotiations were now proceeding in regard to such claims. If that were not the position, and if wage rates were actually now stabilized, he would attach much importance to the argument that if the cost of living were raised, owing to a reduction in the subsidies, then claims for increases in wages would be put forward. Were not such claims going to be put forward in any event, and was it not mainly the relative demand for and supply of labour, coupled with the circumstances of the individual industries, that would determine the future course of wage rates in most industries, rather than the movements of the index of retail prices?

One further point seemed to the speaker to call for special comment. Under the policy of subsidies £400 million a year was now being devoted to keeping down the prices of the more essential foodstuffs during a period of steadily rising wages. The result of that, as it seemed to him, was to release purchasing power in increasing measure for expenditure on less essential commodities. Thereby industries which were engaged in producing non-essentials or luxuries were put in a better position to give increases in wage rates, and so to retain workers who in present conditions were urgently required in more essential industries.

Dr. E. R. Bransby wished to make one point in regard to the long-term policy concerning subsidies. Whether or not there should be subsidies and the form they should take should depend on whether they were achieving the purpose they were supposed to achieve. He agreed with Mr. Woodcock that during the war food subsidies were part of a wider system, embracing rationing and price control, to ensure that, as far as practicable, the people were properly fed. It was, in fact, an example of a subsidy policy with a well-defined purpose, which was undoubtedly achieved. The same method of approach should be adopted in regard to the long-term subsidy policy.

CC-0. In Public Domain. Gurukul Kangri Collection, Haridwar

Digitized by Arya Samaj Foundation Chennai and eGangotri



This could be illustrated in regard to nutrition. Nobody concerned with nutrition would be satisfied with the wages or subsidy policy which failed to bring about a rising level of nutrition or which failed eventually to achieve the targets set by nutrition authorities. Wage levels in relation to food prices might alone be sufficient to accomplish this; if not, subsidies should give a helping hand. The same principle should apply to other important objectives, such as housing. The right way of approaching the problem was to set the targets and to frame economic and fiscal policy to achieve them; the wrong way was to hold economic theories as sacred, even though they resulted in empty bellies and the like.

Mr. L. T. WILKINS said that the discussion had turned to some extent on the question of incentives and wages and it had been suggested that workers would sell themselves to the highest bidders. There was much more than that in labour movements. If it should be decided that subsidies were to be reduced by stages, those stages should be examined, not in the light of the conceptions of the ideal "economic man," but in terms of the real population of this country. It was certain that they could not regard subsidies as one homogeneous collection. They differed in their character and purpose. Nor could they regard the people of this country as a homogeneous collection. Incentives were different in different sections of the community, and subsidies affected different people in different ways.

He thought they needed to know more of the real behaviour of the "economic man" before they made any drastic changes in the food or nutritional standard which existed at the present time. Before reduction was started by stages it should be ensured that those stages were not geared to some ideal economic conception, but were determined in the light of the needs of the real population of this country, which should be measured by scientific methods.

Mr. T. W. WYATT asked if consideration had been given to the effect which the withdrawal of the subsidies would have on people with small fixed incomes. Reference had been made to the benefit of the subsidies to workers, but against this the purchase tax had withdrawn a great deal of purchasing power from them and had very largely contributed to the demands for higher wages. It must be remembered that purchase tax had greatly increased the price of a considerable number of commodities, many of which were essential to a reasonable standard of living.

He also considered that sufficient emphasis had not been given to the possibilities of increased production in correcting our present position. This had been aggravated by last year's very exceptionally severe weather and the consequent poor harvest. On the other hand, the Secretary of Agriculture of the United States, as quoted in the *Times* of January 14th this year, had stated that American farmers had revolutionized production and the revolution was there to stay. They were producing one-third more food and fibre than before the war, and there was going to be an abundance of agricultural production. For many years to come the American farmer would need sizeable export markets, while the prospect of a collapsing European economy would provide little outlet for American farm products, and the growers were concerned at their enormous surplus of wheat.

He had heard many of the arguments used this evening about twenty-five years ago. The disastrous effect of the deflationary policy after the last war should be borne in mind; great care would be needed in dealing with this question of reducing the subsidies.

Mr. K. L. KINSMAN said that some complaint had been made that evening against the trade unions for forcing wage increases. He would suggest that the cost of living was not stabilized. All that was stabilized, or relatively stabilized, was the cost of living index. A reasonable cost of living index might have been taken as an index of the cost of living, but as soon as the different items which formed that index were selected for the purpose of being given subsidies a different situation was created. This did not in itself stabilize the cost of living. The average man could only see the effect on the cost of living, whatever happened to the items in the index. The average man naturally said, "I do not care what the cost of living index indicates. I know, and my wife knows, what has happened."

During the war the speaker was working at a lathe in a factory, and he learned there what the average man in the factory had to say on these issues. He did not see why the average man should have been expected to accept the stabilization of the cost of living index as being also a stabilization of the cost of living. He thought that the difficulty had arisen firstly from using the cost of living index for a purpose for which it was not intended, thereby making it no longer an index, and secondly because the people affected, namely, the rank and file trade union members, had not been taken into the confidence of the authorities.

Mr. R. G. SPENCER said that he did not think this problem could be taken completely out of its political context. A previous speaker had shown that the subsidies could be regarded as a

CC-0. In Public Domain. Gurukul Kangri Collection, Haridwar

Digitized by Arya Samaj Foundation Chennai and eGangotri



form of added indirect taxation. They will therefore have the effect of a highly progressive tax, resulting in a large transfer of income to the working class. It was not so much a matter of what means should be taken in order to ease the general situation but what means should be taken under present political conditions. It was the policy of the Labour Party to increase the income of the wage-earners, and actually the subsidies had contributed their share to bring about this increase. The whole matter could not be regarded on purely economic considerations. He doubted whether the Labour Government would take any decision which would bring the situation back to what it was before the war and reduce the proportion of wages to what it was then.

Mr. LONGDEN said that the cost of living subsidy was only one element amongst the many possible causes of inflation. To discuss wage increases at length and to demonstrate that these were not all that they seemed to be was in this context contentious—contentious in that it presented the problem simply from the point of view taken by the Chancellor of the Exchequer in the year 1941. There were a great many other elements to be considered—for example, increase of taxation on wage-earners. A tremendous amount of what was actually additional income was accruing to people outside the working-classes. The point in discussing these cost of living subsidies was not one primarily of the economic organization of the country or of its part in economic planning. The primary thing was the contribution which was made to human welfare.

He had personal friends with two or three children—people of the artisan class—whose present earnings certainly were not sufficient to allow them to spend anything but a very small proportion of their incomes on luxuries. It should be remembered that the working man's luxuries had greatly increased in price. In these circumstances he thought that the cost of living subsidies should primarily be regarded, as a previous speaker had indicated, as negative indirect taxation. This went to the root of the problem in its economic bearings.

Mr. A. J. THAYRE said that he could not understand why people went on for years discussing the keeping down of the cost of living, when surely the more important thing was to keep up the standard of living. Speaking from the point of view of the nation rather than of the individual, it seemed to him that the history of recent times was that we had a series of crises which were dodged by one means or another, but that sooner or later we should reach a crisis which we could not dodge unless adequate steps were taken well in advance. The average man had the gravity of the situation disguised for him by the fact that many of the goods he needed were subsidized. The best way of bringing home the situation to him was to take away those subsidies, the value of which was more than offset if it made people blind to the danger. Some other means of redistributing incomes should be found if in fact such redistribution was considered a useful feature of cost-of-living subsidies.

The following contribution from Mr. J. E. ALLEN was read by the Honorary Secretary:

Much to my regret I cannot be present at the discussion on Professor Jones's paper, so I send the following comment. First, I dislike the use of the word "State" (para. 2, line 5); the word should not be used in statistical discussions, because it has so many meanings. Here it clearly means "taxpayer."

Secondly: (para. 5) Why not point out that inflation was started, not deliberately but lightheartedly, by the Government in 1914, when the Chancellor refused to increase taxation during the first 14 months of the Kaiser War, and people were encouraged to spend by the slogan "business as usual," when the right watchword was "nothing as usual." Thus the War Debt was larger, and the rate of interest on it much higher, than it would have been if taxation had been increased sharply in the early months of war.

Thirdly: Does the subsidy always reach the consumer? In the case of houses I feel sure that it has not; for nowhere have the subsidies at the taxpayer's and ratepayer's expense been heavier. Yet nothing has increased so much in price as houses. I fancy that the subsidies have gone mainly to the building and allied trades. Had there been no subsidies at all, I believe that houses would not be costing more than they do now. High prices, in a free market, are usually their own cure, by stimulating production.

Professor JONES said that perhaps the Society would allow him to reply in writing after he had considered the report of the discussion. But there was one point he wished to make in answer to Mr. Woodcock, and he made the point as one who had been all his life an enthusiastic trade unionist. Let it be assumed that the course of the next few years would be very largely a repetition of what followed 1918. After 1918 they cut off the subsidies. By the time they reached the top of the post-war boom the subsidies were non-existent. On account of the abolition of the subsidies the cost of living was temporarily higher than it would otherwise have been, but wages after 1920 did not fall so low as they might have done if the subsidies had remained in existence.

CC-0. In Public Domain. Gurukul Kangri Collection, Haridwar

Digitized by Arya Samaj Foundation Chennai and eGangotri



Was it not possible that the best protection for the working man (in the broadest sense) would be for the subsidies to disappear now when they were relatively significant, thereby making the change in wage rates take place in accordance with the real cost of living?

This was not anticipating his considered reply to the discussion; he mentioned it because the matter seemed too urgent to await the usual publication in the *Journal*.

Professor JONES subsequently replied as follows: I am faced with a dilemma. To do justice to the discussion it would be necessary to write a reply even longer than the opening address; to submit such a long reply would be contrary to the practice followed by the Fellows of the Society. I hope, therefore, that the speakers will accept my difficulty as a personal tribute to their contributions, and permit me merely to add a few brief statements covering the main points.

1. In my opening remarks I drew a distinction between controlled prices and subsidized prices. It would have been possible (though not desirable) to control prices and ration consumption during the war without providing for any cost of living subsidies. Even to-day there are far more controlled prices which contain purchase taxes than there are prices containing an element of subsidy. Subsidies could be abolished while control remained.

2. It is, of course, true that the withdrawal of subsidies might injure those in receipt of fixed incomes. The remedy in such a case is to be found, not in a measure affecting the whole community, but in a measure affecting that same class of people. Whether it would, in fact, cause injury or much injury would depend upon the tax reductions made possible by the abolition of subsidies. I have not seen figures showing how much represents indirect taxation in the new cost of living index, and how much the latter is affected by cost of living subsidies. It would be even more important to compare the incidence of the total of subsidies with the incidence of "marginal" taxation representing the sum necessary to provide the subsidies.

I agree with Mr. Bellerby that it is not always easy to distinguish between social subsidies and cost of living subsidies. Broadly speaking, social subsidies do not interfere with the general price mechanism; the subsidizing authority purchases at market price and distributes to selected people at a special price. The purpose of the cost of living subsidy, which is associated with the control of price, is to reduce the price to all consumers. But, in practice, when the authority is the State itself, and much is purchased abroad, at world prices, the two classes of subsidies, as Mr. Bellerby points out, may be closely interwoven. The discussion in my paper was confined to cost of living subsidies; and the fact that these amount to far less than the £400,000,000 supports the view that the average worker pays more in taxation to meet the subsidies than he receives as subsidies. It should not be forgotten that wage earners and their families comprise only part, although a large part, of the community of consumers of subsidized goods. Abolition of the subsidies would make possible the remission of taxes that are jointly of a highly regressive character.

3. Mr. Woodcock rightly stresses the vagueness of the use of the words "rapid stages" in my paper. I am, of course, aware of the difficulty of translating theory into practice; and we have all been made aware of the rise in the world prices of imported foodstuffs and raw materials. As the subsidies represent a trading loss they are necessarily increased by such rise, unless the subsidized price is raised in proportion. My reply is twofold. It is generally believed that this rise in prices, or adverse movements in the terms of trade, is of a temporary character. I believe, however, that a return to the pre-war terms of trade is very unlikely in the near future. The year 1938 is usually taken as the base year for measuring changes in the terms of trade, as though that year represented a sort of equilibrium. But for many years before the war such terms of trade were in our favour, that is to say, the import price level was relatively low. The increase in world population, combined with the anticipated rise in the standard of living in backward countries, will probably mean a permanent rise, under normal conditions, in the relative import price level. I have seen no reply to the argument used, I believe, by Mr. Hawtrey in support of the view that the British pound is now over-valued. A rise in sterling would itself remove the present need for much of the subsidy, even if it proved necessary to reduce such value later.

The second part of my reply is dictated by the general economic situation. We have ceased to be a creditor nation and have become a debtor nation. We are much poorer than of old, and must accept, for some time to come, a lower standard of living. Greater economy (in the sense of abstinence) is essential. If economy is to be wisely directed every consumer should know the real cost of producing what he consumes. The real cost of imports (apart from American and other oversea gifts) is the effort spent in producing exports in payment. Subsidies hide such cost. By reducing prices below cost the Government induces other types of expenditure, which it then proceeds to check by imposing high purchase taxes. This is surely the wrong way to proceed.

The real difficulty confronting the Government is the individual trade union. As Mr. Ramsbottom pointed out, we are in that condition known as the "seller's market." Apart from the

CC-0. In Public Domain. Gurukul Kangri Collection, Haridwar

Digitized by Arya Samaj Foundation Chennai and eGangotri



fact that wages in many industries are linked with a cost of living index, it is extremely difficult to secure recognition of the fact that we are poorer as a nation. With the present pressure of demand for labour it is understandable that each union in turn should endeavour to secure that its own members should receive a larger share of a smaller total income. The pressure for higher wages would thus be strengthened by a rise in the cost of subsidized necessaries, even though the total cost of living at the standard now available did not increase. I assume that the Government is able to pursue the policy that it deems right, and I would define "rapid" stages as stages sufficiently frequent to emphasize the emergency character of the subsidy policy, so that subsidies would not be accepted as part of the normal expectation of the individual.

As a result of the ballot taken during the meeting, the candidates named below were elected Fellows of the Society:—

Winifred Doris Ashton.
John Benjamin Leslie Clark.
Donald Scott Clayton.
Churchill Eisenhart.
Harold Faulkner.
John Philip Wyndham Hughes.
Vernon Peter Johnson.
Albert Leslie King.
Charles Henry Leigh-Dugmore.
Hilary St. Vincent Longley-Cook.
Isaac Michaels.
Pran Nath.
John Burden Parker.
Marianne June Rigby.
Teh-Long Su.
Alec Taylor.
Ronald Humphrey Tuck.
John Glen Wardrop.
Pascal Kidder Whelpton.
Albert Eric Whitehead.
Tom Iredale Williams.

*Corporate Representative.*

Lady Rhys-Williams, representing The Joint Council for Monetary and Economic Research.

CC-0. In Public Domain. Gurukul Kangri Collection, Haridwar

Digitized by Arya Samaj Foundation Chennai and eGangotri



# The Fire Census and Technical Field Intelligence Work of the Joint Fire Research Organization

By J. Wallace

[Read before the Royal Statistical Society, February 17th, 1948, the President, Dr. David Heron, in the Chair]

Every year more than 1,200 people in Great Britain lose their lives as a result of fire, and direct damage to property is estimated to be of the order of £12,000,000. These figures indicate the size of the problem of fire wastage. Among the several bodies whose function it is to attempt to reduce this loss is the Joint Fire Research Organization of the Department of Scientific and Industrial Research and of the Fire Offices' Committee. To be able to distribute the research effort so that its results can be used to the greatest advantage it is necessary to know the types of fires, their relative numbers, the damage which they cause and many other technical details concerning them. The study of these factors can be made by examining accurate reports of observations made at fires.

The first essential is therefore a fire census to give a library of fire reports. To study the many different aspects of fires to which research should be directed, an index to the library—an "Index incendiorum"—is needed. To make the study quantitative statistical analyses must be carried out. To complete the picture, detailed information is required on those fires to which attention has been especially directed by the results of analyses of fire census reports: a technical field intelligence service is needed to provide the information, which must also be collected in such a way that it can be treated statistically.

It is the object of the present paper to describe the work that has so far been carried out in providing this statistical background for fire research: it will be considered under the following headings:

I. Fire Census.
   1. *Library of census reports.*
   2. *Index incendiorum.*
   3. *Statistical analysis of census reports.*

II. Technical Field Intelligence Work and Statistical Surveys.

## I. Fire Census

Ideally, reports of all fires, whatever their type or size, should be studied; there is, however, no single source from which information may be obtained on all the fires which occur in the United Kingdom, so that one must consider first the various sources which exist and the extent to which the information from them may be regarded as representative of all fires or of a particular category of incident. The sources may be classified as follows:

(a) *National Fire Service**

The National Fire Service attend about 75,000 outbreaks each year; approximately 18,000 of these are chimney fires. They are called to all large fires, but there are small fires that are extinguished by the fire brigades of industrial and business firms and of Service and other Government establishments and by private individuals, without any call being made to the N.F.S. The precise proportion of all fires that fall within this latter category is not known, and consequently

* At the time of writing this paper there is still a National Fire Service. On April 1, 1948, the Fire Service comes under local authority control as laid down in the Fire Services Act, 1947.

CC-0. In Public Domain. Gurukul Kangri Collection, Haridwar

Digitized by Arya Samaj Foundation Chennai and eGangotri



no accurate assessment can be made of the extent to which the sample of small fires attended by the N.F.S. is representative of all fires that attain only small dimensions in the United Kingdom. It can, however, be assumed that the fires attended by the N.F.S. are responsible for a very large proportion of the total damage caused by fire.

(b) *Insurance companies and underwriters*

Insurers may be classified into three main groups, namely Tariff Offices, Non-Tariff Offices and Lloyd's Underwriters: they have information on every fire on which a claim for damage is made. These fires include many of those that are not attended by the National Fire Service.

(c) *Industrial and private fire brigades' associations*

The industrial and private fire brigades' associations are a potential source of information on some of the fires that are extinguished without the N.F.S. being called. There are several of these associations, including the following:

Industrial Fire Brigades' Association of Great Britain.
London Private Fire Brigades' Association.
National Fire Brigades' Association.
West Midlands Private and Industrial Fire Brigades' Association.

The industrial fire brigades deal with a large number of small incidents which result from and are representative of the special risks of particular industries.

(d) *Admiralty, War Office, Air Ministry and other Government Departments*

Almost all Government property is uninsured, and fires occur on such property to which the N.F.S. are not called. Reports on these fires are prepared by the Fire Protection or Fire Service Departments of the ministries concerned.

Statistics on certain types of industrial fires and explosions are given in the annual report of H.M. Chief Inspector of Factories, Ministry of Labour and National Service, and data on fires which occur on the railways of Great Britain are presented in the annual report of the Chief Inspecting Officer of Railways to the Minister of Transport. Mention should also be made of the information concerning deaths due to fire given by the Registrars-General in their annual returns.

(e) *Miscellaneous sources of information on fires*

Some local authorities and a number of large undertakings do not insure their property but keep records of fires causing damage; and there are certain firms that maintain their own fire brigades, but are not members of any of the industrial and private fire brigades' associations.

It will be appreciated that reports on any one incident might figure in more than one of the above sources of data.

In addition to the fires on which information may thus be obtained, there are those that are extinguished by private individuals in hazards that are uninsured or insured but suffered insufficient damage for a claim to be made. There is no existing method of obtaining information on these fires.

### 1. *Library of Census Reports*

In 1943, after discussions between the Fire Research Division of the Research and Experiments Department of the Ministry of Home Security and the Fire Service Department of the Home Office, it was decided that the existing report form which the National Fire Service completed for every incident which they attended should be revised, to give information which could be analysed to compile annual statistical returns for the N.F.S., and could at the same time be classified in such a way as to make it available for research purposes.

A new report form was designed by the two Departments in collaboration and was introduced in 1944. In 1946 the Fire Research Division was merged in the Joint Fire Research Organization of the Department of Scientific and Industrial Research and Fire Offices' Committee. The Organization has now a library of over a quarter of a million of these reports, covering all the

CC-0. In Public Domain. Gurukul Kangri Collection, Haridwar

Digitized by Arya Samaj Foundation Chennai and eGangotri



fires attended by the N.F.S. in the United Kingdom since January 1, 1944. Details of the report forms used are discussed in the Appendix.

Because of the time lag of several days between the occurrence of a fire and the receipt of the census report in London, these reports cannot be used to enable the Joint Fire Research Organization to keep its finger on the pulse of current fires. The N.F.S. have, however, provided a means by which this is done. The Organization is notified immediately by telephone and later in writing of every fire requiring five or more pumps to extinguish it, and of smaller fires of certain types that are of particular interest. The N.F.S. prepare technical reports of these fires on request. These Research Reports, as they are called, keep the workers in the laboratory up to date with actual fires that have a bearing on their work; when necessary the N.F.S. provide still further details.

The system of notification of fires also enables visits to be paid by the staff to fires in progress, and arrangements whereby members of the Organization spend one night a week at London Fire Stations are of great value in giving them first-hand experience of fires.

The Joint Fire Research Organization also receives reports from about twenty Honorary Fire Observers; they are scientists in various parts of the country who have voluntarily agreed to visit fires of which they are notified by the local N.F.S., and to furnish reports on any aspects of a scientific nature that they consider to be worthy of note.

### 2. *Index Incendiorum*

Information in the N.F.S. fire census reports is analysed by a punched card system, which provides automatically an index to the reports considered: for every hazard in which a fire starts or to which it spreads a card is punched. The cards are sorted, and the information on them is tabulated by the Mathematics Division of the National Physical Laboratory.

### 3. *Statistical Analysis of Census Reports*

The work on the analysis of the N.F.S. fire census reports can be divided into two sections:

(a) *Preparation of annual national statistical returns of fires attended by the N.F.S.*

Before the formation of the National Fire Service many local Fire Brigades kept records of the fires which they attended, and produced annual statistical returns. Perhaps the earliest published statistics are those given by Captain E. M. Shaw in his book entitled *Records of the late London Fire Engine Establishment*. They cover the period 1833–1865, and the author refers to them as "the largest amount of trustworthy Fire Statistics hitherto collected in a methodical form."

With the formation of the N.F.S. in 1941 it was for the first time possible to obtain fire statistics on a nation-wide basis. War-time exigencies limited the scale on which it was possible or desirable to embark on a full analysis. To test the method of carrying out the analysis, however, a trial run was made during 1944 and 1945 on approximately 23,000 fire reports covering a quarter of year 1944. Owing to shortage of staff a random one-in-four sample* of reports for 1946 was analysed for the first full year's statistics. The system has now been considerably simplified and all reports for 1947 are being analysed. The code lists, the lay-outs of the cards and the method of coding the reports and preparing punched cards are described in the Appendix.

The returns which are now prepared by the Joint Fire Research Organization for the Fire Service Department of the Home Office give analyses of the attendances of each Fire Force of the National Fire Service at fires according to the method of call, the hazard in which fire started,

* The procedure adopted for selecting the sample was first to add to each of the figures 1, 5, 9, 13, 17, etc., one of the figures 0, 1, 2, 3 taken at random (tables of random numbers were used). A series of 10,000 numbers, the first ten of which were 3, 6, 10, 15, 17, 23, 25, 31, 35 and 40 was obtained. The census reports from each of the 44 Fire Areas into which Great Britain was divided had been previously numbered in chronological order: the reports to be coded were selected according to the prepared list of numbers, i.e. the numbers obtained as described above were used for extracting the required sample from each of the 44 Areas separately.

CC-0. In Public Domain. Gurukul Kangri Collection, Haridwar

Digitized by Arya Samaj Foundation Chennai and eGangotri



the supposed cause of the outbreak, the attendance of special N.F.S. appliances and the method of extinction of the fire: statistical information is also given of the number of people who escaped, were rescued or became casualties in these fire incidents. Some of the statistical tables will be most valuable to the Organization, for example, in studying the yearly trends in the frequency of fires in different hazards and of fires due to different causes. Table I gives an analysis of the supposed causes of fires in the United Kingdom during 1946 in relation to the trade or business carried on in the building in which the fire started; Table II gives the corresponding information for hazards other than buildings.

(b) *Statistical analyses for research purposes*

Whilst the annual census gives a broad picture of fire, and together with information from other sources on financial losses shows the general directions to be followed by research, more detailed analysis is necessary when a particular research problem is to be tackled; the punched cards are then invaluable as an index to the reports.

The use of the N.F.S. census reports in this connection can be illustrated by reference to a current problem of general interest, namely, the fire hazard of post-war dwellings. The general design, the details of construction and the nature of the materials used in some of the post-war houses are in many instances so different from those of dwellings erected before the war that it was imperative to attempt to compare the risk of both outbreak and spread of fire in post-war housing with that of pre-war housing. Whilst the complete picture can only be obtained by consideration of all outbreaks, it has so far only been possible to analyse those to which the N.F.S. were called.

The numbers of the different types of post-war dwellings completed each month are given in the Housing Returns issued by the Ministry of Health for England and Wales and by the Department of Health for Scotland. The overall rate of incidence of fire can be expressed quantitatively in terms of the equivalent number of damaged dwellings per 10,000 dwellings at risk per year ($p$). The total number occupied at the end of one month has been taken as the number at risk during the following month. The equivalent number of houses at risk per year, i.e. the number of house years ($N$), is therefore one-twelfth of the sum of the number of houses at risk each month. If $n$ is the number of damaged dwellings, $p = 10{,}000\ n/N$.

The standard error of $p$ ($s$) has been determined on the assumption that the value of $p$ for each type of dwelling has been calculated from a sample taken from a homogeneous Poisson distribution, using the formula $s = \sqrt{10{,}000\ p/N} = 10{,}000\ \sqrt{n/N}$. It is realized that the populations considered may deviate slightly from the Poisson distribution and that they may not be homogeneous, and hence the formula can be used only as an approximation.

The rates of incidence of fires attended by the N.F.S. in post-war houses and flats in Great Britain during the period of twelve months, October 1, 1946, to September 30, 1947, are given in Table III. Fires that did not spread beyond chimneys or flues have not been considered.

The post-war dwellings have been classified in three main groups:

(i) *Temporary.*—These are the single storey buildings that are commonly referred to as "prefabs."

(ii) *Permanent non-traditional.*—New forms of construction are being used in these buildings.

(iii) *Permanent traditional.*—The types of construction are similar to those used in pre-war housing.

None of three types (H, I, J) of temporary houses was damaged by fire, only two of another type (F) and four of another type (G). If the numbers of damaged dwellings of these five types of houses are pooled and the $\chi^2$ test applied to the numbers recorded in the resulting six types of temporary houses, it is found that $\chi^2 = 1{\cdot}0$ for five degrees of freedom, indicating that, subject to the assumptions described above, the differences between the different types are insignificant, and therefore that there is no evidence to show that the risk of initiation of fire in one type of temporary house was greater than that of another. The average rate for all temporary houses taken together was 9 damaged houses per 10,000 houses at risk per year.



CC-0. In Public Domain. Gurukul Kangri Collection, Haridwar

Digitized by Arya Samaj Foundation Chennai and eGangotri

TABLE I.—*Supposed Cause of Fires in Buildings in Relation to Hazard in which Fire Started.*

(Each item in the list of supposed causes of fire given in the table represents a group of causes which in some cases is according to the nature of the material first ignited and in others according

| Row No. | Supposed cause of fire. | Hazard in which fire started. Agriculture | 2 Mining, quarrying and treatment of non-metalliferous mine and quarry products (excluding gas works) | 3 Manufacture of bricks, pottery, glass | 4 Manufacture of chemicals, explosives, paints, oils | 5 Manufacture of metals, machines, implements, conveyances. | 6 Manufacture of textiles and textile goods (not dress) | 7 Manufacture of clothing (not knitted) including footwear, and goods of leather and leather substitute; preparation of skins and leather | 8 Manufacture of food, drink, tobacco | 9 Woodworking; manufacture of cane and basket ware, furniture, fittings | 10 Paper making; manufacture of stationery and stationery requisites; | Building, decorating, etc slate and stone cutting and dressing | |
|---|---|---|---|---|---|---|---|---|---|---|---|---|---|
| 1 | Ashes, hot | 4 | — | 1 | 1 | 3 | — | 4 | 5 | 2 | | | 4 |
| 2 | Bombs, flares, fireworks, explosives, etc. | 2 | — | — | — | — | 1 | — | 2 | — | | | — |
| 3 | Candle | 3 | — | — | — | 1 | — | 1 | — | 1 | | | 1 |
| 4 | Chimney on fire, confined to chimney | 1 | — | — | 1 | 2 | 2 | 5 | 5 | 2 | | | — |
| 5 | ,, ,, not confined to chimney | — | — | — | — | 2 | — | 2 | 1 | 1 | | | 1 |
| 6 | Chimney sparks from (outside building) | 8 | — | — | 1 | 4 | 2 | 3 | 2 | 2 | | | 4 |
| 7 | Doubtful | 2 | 1 | — | — | 1 | — | — | — | — | | | 1 |
| 8 | Electric cooker, kettle, refrigerator | — | — | — | — | 2 | — | — | 1 | — | | | — |
| 9 | ,, fire, heater, radiator | — | 1 | — | — | 7 | 1 | 3 | 2 | 1 | | | 1 |
| 10 | ,, iron | — | — | — | — | — | — | 4 | — | 1 | | | — |
| 11 | ,, motor | — | — | — | — | 8 | 1 | 2 | 3 | 7 | | | 1 |
| 12 | ,, wire and cable | 3 | 1 | — | 2 | 21 | 5 | 3 | 3 | 8 | 3 | | 5 |
| 13 | ,, other apparatus | 2 | — | — | 2 | 11 | 1 | 2 | 2 | 1 | 1 | | 1 |
| 14 | Fire in grate igniting bedding, clothing, linen | 2 | — | — | — | — | — | — | — | — | | | — |
| 15 | ,, ,, ,, furniture and furnishings | — | — | — | — | — | — | — | — | — | | | — |
| 16 | ,, ,, ,, structural timber under hearth | — | — | — | — | 3 | 1 | 4 | 2 | 1 | | | 7 |
| 17 | ,, ,, ,, other materials | 8 | 2 | — | — | 7 | 3 | 4 | 3 | 2 | | | 8 |
| 18 | Fish-frying range (all fuels) | — | — | — | — | 1 | — | — | — | — | | | — |
| 19 | Flue | 6 | 2 | 1 | 1 | 7 | — | 3 | 4 | 2 | | | — |
| 20 | Gas (coal) cooker | — | — | — | 1 | 1 | — | — | — | — | | | — |
| 21 | ,, ,, ring | — | 1 | — | 1 | 2 | 1 | 2 | 4 | 1 | | | 2 |
| 22 | ,, ,, other apparatus | 1 | — | 1 | 8 | 22 | 3 | 3 | 9 | 2 | | | 3 |
| 23 | Incendiarism | 2 | — | — | — | 1 | 3 | — | — | — | | | 1 |
| 24 | Intentional burning of grassland, gorse, etc. | 2 | — | — | — | — | 1 | — | — | — | | | — |
| 25 | Lightning | — | 1 | — | — | — | — | — | — | — | | | — |
| 26 | Locomotive, sparks from | 2 | — | 1 | 3 | 3 | — | 1 | — | 1 | | | 1 |
| 27 | Matches | 5 | — | — | — | 5 | — | 1 | 2 | — | | | 2 |
| 28 | ,, children playing with | 34 | 2 | — | — | 4 | 3 | — | 4 | 5 | | | 3 |
| 29 | Mechanical heat or sparks | — | 1 | 1 | 6 | 23 | 39 | 2 | 4 | 11 | | | 1 |
| 30 | Metal, hot | — | 1 | 1 | — | 27 | — | — | 1 | — | | | — |
| 31 | Oil engine (including petrol) | 20 | 2 | 2 | — | — | — | — | 2 | 3 | | | 3 |
| 32 | ,, lamp, stove | 57 | — | — | — | 2 | 1 | — | 2 | 1 | | | 1 |
| 33 | ,, other apparatus | 4 | — | — | — | 4 | — | 1 | 2 | — | | | 3 |
| 34 | Oxyacetylene cutting and welding apparatus | 1 | 1 | 1 | 3 | 19 | — | — | — | 1 | | | 4 |
| 35 | Rubbish, burning | 20 | — | — | — | 8 | 3 | 1 | 2 | 4 | | | 6 |
| 36 | Slow combustion stove igniting structural woodwork | 12 | — | 2 | — | 5 | 1 | 2 | 1 | 7 | | | 6 |
| 37 | ,, ,, ,, ,, other materials | 18 | 4 | 1 | 1 | 11 | 3 | — | 2 | 15 | | | 11 |
| 38 | Smoking materials | 50 | 2 | 3 | 4 | 60 | 14 | 14 | 13 | 28 | | | 24 |
| 39 | Spontaneous combustion | 11 | — | — | 2 | 5 | 4 | 2 | 1 | 1 | | | 3 |
| 40 | Sun's rays | 2 | — | — | — | — | — | — | — | — | | | — |
| 41 | Taper, lighted paper or sticks | — | — | — | — | 1 | — | 1 | — | — | | | — |
| 42 | ,, ,, ,, children playing with | 1 | — | — | — | — | — | — | — | — | | | — |
| 43 | Miscellaneous | 46 | 4 | 10 | 16 | 34 | 8 | 2 | 32 | 11 | | | 14 |
| 44 | Unknown source of ignition | 61 | 2 | 3 | 13 | 38 | 11 | 10 | 14 | 29 | | | 18 |
| 45 | Total fires in buildings | 390 | 28 | 28 | 66 | 356 | 112 | 82 | 130 | 151 | | | 151 |
| | Column No.: | 1 | 2 | 3 | 4 | 5 | 6 | 7 | 8 | 9 | | | 11 |

CC-0. In Public Domain. Gurukul Kangri Collection, Haridwar

Digitized by Arya Samaj Foundation Chennai and eGangotri

*One-in-four Sample of Reports from England, Scotland, Wales and Northern Ireland, 1946.*

have a common source of ignition. In some cases the groups have been divided into sub-groups the act with the source of ignition which led to the outbreak of fire.)

| 1 | 12 | 13 | 14 | 15 | 16 | 17 | 18 | 19 | 20 | 21 | 22 | 23 | 24 | 25 | 26 | 27 | |
|---|---|---|---|---|---|---|---|---|---|---|---|---|---|---|---|---|---|
| Building, decorating, etc. | Other manufacturing industries, including rubber and synthetic rubber | Gas, water, electricity, sewage | Transport and communication | Commerce; retail shops, including departmental stores | Commerce; wholesale dealers and warehouses | Offices; Government and other | Navy, Army, Air Force establishments | Fire Service establishments | Professional establishments (other than offices) and public institutions | Places of public entertainment | Private residential houses | Private residential flats | Clubs, hotels, restaurants, public houses | Private huts, unoccupied houses, personal service | Miscellaneous and undefined | Total | Row No. |
| 4 | 1 | — | 4 | 8 | 2 | 2 | 2 | — | 9 | 2 | 66 | 7 | 7 | 27 | 4 | 165 | 1 |
| — | 1 | 1 | — | — | — | — | 2 | — | — | — | 6 | — | 2 | 2 | — | 19 | 2 |
| 1 | — | — | 4 | 5 | 1 | — | — | — | — | — | 88 | 6 | — | 6 | 3 | 121 | 3 |
| 2 | — | — | 7 | 51 | 5 | 13 | 16 | 2 | 45 | 2 | 3,751 | 340 | 78 | 5 | — | 4,339 | 4 |
| 1 | — | — | 1 | 2 | — | — | 4 | — | 2 | — | 250 | 74 | 23 | 5 | 1 | 369 | 5 |
| 2 | — | — | 1 | 3 | 2 | 1 | 1 | — | 4 | — | 77 | 7 | 7 | 9 | 4 | 142 | 6 |
| — | 1 | — | 2 | 4 | — | 1 | 1 | — | 4 | 1 | 4 | — | 3 | 1 | — | 27 | 7 |
| — | — | — | — | 70 | 3 | 3 | — | — | 2 | 3 | 83 | 8 | 13 | — | 2 | 190 | 8 |
| 1 | 4 | 1 | 9 | 18 | 2 | 9 | 4 | — | 8 | — | 133 | 20 | 7 | 3 | 2 | 238 | 9 |
| — | — | — | — | 6 | 1 | — | 1 | — | 1 | — | 47 | 8 | 4 | 2 | — | 75 | 10 |
| 1 | 2 | 3 | 4 | 34 | 1 | 1 | 2 | 1 | 2 | — | 5 | 4 | 7 | 1 | 1 | 90 | 11 |
| 5 | 3 | 6 | 58 | 46 | 8 | 17 | 14 | 1 | 25 | 7 | 214 | 25 | 31 | 15 | 3 | 527 | 12 |
| 1 | 2 | 2 | 15 | 7 | 2 | 3 | 6 | — | 3 | 11 | 53 | 9 | 8 | 2 | 2 | 148 | 13 |
| — | — | — | — | 1 | — | — | 1 | — | 2 | — | 203 | 24 | 1 | 1 | 1 | 236 | 14 |
| — | — | — | — | — | 1 | 2 | — | — | 1 | — | 161 | 19 | 3 | 1 | — | 188 | 15 |
| 1 | 7 | — | — | 2 | 12 | — | 9 | 7 | 1 | 11 | 1 | 400 | 119 | 35 | 3 | — | 619 | 16 |
| 2 | 8 | 4 | 2 | 6 | 19 | 2 | 7 | 3 | — | 11 | 1 | 289 | 45 | 13 | 6 | 8 | 455 | 17 |
| — | — | — | — | — | 2 | — | — | 1 | — | 3 | — | 1 | — | 108 | — | — | 116 | 18 |
| 2 | — | 1 | — | 3 | 6 | 2 | — | 13 | — | 18 | 1 | 56 | 4 | 18 | 10 | 1 | 162 | 19 |
| — | — | — | — | — | 9 | 2 | 1 | 5 | — | 4 | 2 | 77 | 8 | 19 | — | — | 129 | 20 |
| 1 | 2 | — | — | 1 | 18 | 1 | 3 | 1 | 1 | 3 | — | 35 | 4 | 6 | 1 | — | 89 | 21 |
| 2 | 3 | 9 | 5 | — | 14 | 3 | 1 | — | 1 | 18 | 2 | 66 | 8 | 22 | 2 | — | 203 | 22 |
| — | 1 | 1 | — | — | 2 | — | — | 2 | — | 2 | — | 6 | — | 1 | 2 | — | 23 | 23 |
| — | — | — | — | 2 | 1 | — | — | — | — | — | — | 1 | — | — | — | — | 7 | 24 |
| — | — | — | — | — | 1 | — | — | — | — | 2 | — | 9 | — | — | — | — | 13 | 25 |
| 1 | 1 | — | — | 14 | — | 3 | — | 1 | — | 1 | — | 5 | — | — | 1 | 5 | 42 | 26 |
| — | 2 | 1 | — | 8 | 11 | 2 | 1 | 2 | — | 4 | 1 | 39 | 4 | 3 | 6 | 4 | 101 | 27 |
| 5 | 3 | 3 | 1 | 21 | 20 | 17 | 5 | 4 | 1 | 14 | 11 | 65 | 10 | 5 | 86 | 340 | 669 | 28 |
| 11 | 1 | 3 | 2 | 2 | 1 | 3 | — | 1 | — | 1 | — | — | — | 4 | 1 | — | 106 | 29 |
| — | — | — | — | — | — | — | — | — | — | — | — | — | 1 | — | — | — | 31 | 30 |
| 3 | 3 | — | — | 23 | 1 | 5 | — | 1 | 1 | 1 | — | 1 | — | — | — | — | 66 | 31 |
| 1 | 1 | — | — | 15 | 6 | — | 2 | 10 | — | 3 | 1 | 65 | 4 | 4 | 26 | 1 | 201 | 32 |
| — | 3 | — | — | 6 | 5 | 1 | 2 | 2 | — | 6 | 1 | 64 | 2 | 6 | 7 | — | 118 | 33 |
| 1 | 4 | — | 1 | 13 | — | — | — | 3 | — | — | — | — | — | 1 | — | 1 | 50 | 34 |
| 4 | 6 | 2 | — | 6 | 15 | 5 | — | 3 | 2 | 3 | 2 | 10 | — | 3 | 22 | 14 | 132 | 35 |
| 7 | 6 | — | 3 | 6 | 4 | 1 | 3 | 10 | — | 11 | 2 | 18 | 2 | 8 | 14 | 14 | 132 | 36 |
| 15 | 11 | 6 | 1 | 17 | 13 | 7 | 1 | 9 | 2 | 13 | 3 | 28 | 1 | 10 | 9 | 5 | 194 | 37 |
| 28 | 24 | 13 | 2 | 42 | 103 | 28 | 34 | 29 | 3 | 26 | 43 | 253 | 38 | 86 | 59 | 65 | 1,048 | 38 |
| 1 | 3 | 1 | 4 | 4 | 3 | 3 | — | 1 | — | 4 | 1 | 7 | — | 2 | 2 | 3 | 66 | 39 |
| — | — | 1 | — | — | 3 | — | — | — | — | 1 | — | 5 | — | — | 3 | 1 | 16 | 40 |
| — | — | — | — | 1 | 2 | — | 1 | — | — | 1 | — | 23 | 4 | 2 | 2 | 3 | 42 | 41 |
| — | — | — | — | — | 2 | 1 | 1 | — | — | 3 | — | 25 | 6 | 1 | 4 | 2 | 47 | 42 |
| 11 | 14 | 7 | 6 | 16 | 37 | 10 | 3 | 9 | — | 17 | 10 | 123 | 17 | 16 | 28 | 52 | 532 | 43 |
| 29 | 18 | 8 | 5 | 43 | 53 | 22 | 10 | 36 | 1 | 36 | 20 | 152 | 19 | 26 | 61 | 47 | 745 | 44 |
| 151 | 151 | 78 | 45 | 356 | 618 | 146 | 136 | 207 | 17 | 325 | 128 | 6,964 | 847 | 593 | 435 | 589 | 13,028 | 45 |
| | 11 | 12 | 13 | 14 | 15 | 16 | 17 | 18 | 19 | 20 | 21 | 22 | 23 | 24 | 25 | 26 | 27 | |

CC-0. In Public Domain. Gurukul Kangri Collection, Haridwar

Digitized by Arya Samaj Foundation Chennai and eGangotri



TABLE II.—*Supposed Cause of Fires Other than those in Buildings in Relation to Hazard in which Fi*

| Row No. | Supposed cause of fire | Hazard in which fire started: Crops, ricks and stacks | Agricultural machinery | Agricultural waste | Agriculture, other | Gardens and allotments | Railway embankments | Grassland, heathland |
|---|---|---|---|---|---|---|---|---|
| Column No.: | | 1 | 2 | 3 | 4 | 5 | 6 | 7 |
| 1 | Aircraft crashed | — | — | — | — | — | — | — |
| 2 | Ashes, hot | — | — | — | 4 | 1 | 1 | 6 |
| 3 | Bombs, flares, fireworks, explosives, etc. | 6 | — | — | 1 | 2 | — | 14 |
| 4 | Brazier | — | — | — | — | — | — | — |
| 5 | Chimney, sparks from (outside building) | 7 | — | — | — | — | — | 2 |
| 6 | Doubtful | 5 | — | — | 1 | — | — | 1 |
| 7 | Electric motor | — | — | — | — | — | — | — |
| 8 | ,, wire and cable | — | 3 | — | — | — | — | — |
| 9 | ,, other apparatus | — | — | — | — | — | — | — |
| 10 | Flue | — | — | — | — | — | — | — |
| 11 | Gas (coal) apparatus | — | — | — | — | — | — | — |
| 12 | Incendiarism | 4 | — | — | — | — | — | 2 |
| 13 | Intentional burning of grassland, gorse, etc. | 3 | — | — | — | 6 | 5 | 51 |
| 14 | Lightning | 13 | — | — | — | — | — | — |
| 15 | Locomotives, sparks from | 41 | — | 1 | 9 | 4 | 208 | 138 |
| 16 | Matches | 5 | — | — | — | 1 | — | 42 |
| 17 | ,, children playing with | 100 | 1 | 4 | 9 | 21 | 8 | 481 |
| 18 | Mechanical heat or sparks | 3 | — | — | — | — | — | — |
| 19 | Metal, hot | — | — | — | — | — | — | — |
| 20 | Oil engine (including petrol) | 16 | 16 | — | 1 | — | 1 | — |
| 21 | ,, lamp, stove | — | — | — | — | 1 | — | 2 |
| 22 | ,, other apparatus | — | — | — | — | — | — | — |
| 23 | Oxyacetylene cutting and welding apparatus | — | — | — | — | — | — | — |
| 24 | Rubbish, burning | 72 | — | 24 | 21 | 43 | 6 | 190 |
| 25 | Slow combustion stove | — | — | — | — | — | — | — |
| 26 | Smoking materials | 99 | 2 | 4 | 14 | 18 | 6 | 407 |
| 27 | Spontaneous combustion in rubbish | — | — | — | — | — | — | — |
| 28 | ,, ,, other materials | 46 | — | 2 | — | 1 | — | 1 |
| 29 | Steam roller, engine, tractor, tractor engine | 4 | 1 | — | 1 | — | — | 1 |
| 30 | Sun's rays | 4 | — | — | — | 3 | 1 | 15 |
| 31 | Taper, lighted paper or sticks | — | — | 1 | — | — | — | — |
| 32 | ,, ,, ,, children playing with | 2 | — | — | — | 1 | — | 3 |
| 33 | Miscellaneous | 25 | 3 | 2 | 5 | — | — | 40 |
| 34 | Unknown source of ignition | 134 | — | 2 | 6 | 5 | 2 | 239 |
| 35 | Total fires other than those in buildings | 589 | 26 | 40 | 72 | 107 | 238 | 1,635 |
| | Column No.: | 1 | 2 | 3 | 4 | 5 | 6 | 7 |

CC-0. In Public Domain. Gurukul Kangri Collection, Haridwar

Digitized by Arya Samaj Foundation Chennai and eGangotri



*Started. One-in-four Sample of Reports from England, Scotland, Wales and Northern Ireland, 1946*

| 9 | 10 | 11 | 12 | 13 | 14 | 15 | 16 | 17 | 18 | 19 | 20 | 21 | 22 | |
|---|---|---|---|---|---|---|---|---|---|---|---|---|---|---|
| | | | Transport and communications | | | | Outdoor storage | | | | | | | |
| Single trees | Felled timber | Air | Rail | Road: oil, petrol or gas-driven vehicles | Road: other vehicles | Water | Chemicals, explosives, ammunition, oils, grease | Coal and coke | Refuse | Timber | Other materials | Miscellaneous outdoor structures | Total | Row No. |
| — | — | 15 | — | — | — | — | — | — | — | — | — | — | 15 | 1 |
| — | — | — | 1 | 4 | 1 | 4 | 2 | 9 | 117 | 7 | 6 | 4 | 167 | 2 |
| 3 | — | — | — | — | — | — | — | — | — | 1 | 3 | 3 | 34 | 3 |
| — | — | — | 2 | — | — | 2 | — | — | 2 | — | 3 | 18 | 27 | 4 |
| — | — | — | — | — | — | — | — | — | 1 | 1 | 1 | 5 | 17 | 5 |
| — | — | — | — | 2 | 1 | — | — | — | — | 1 | 1 | 2 | 14 | 6 |
| — | — | — | — | 1 | 2 | — | — | — | — | — | — | 2 | 5 | 7 |
| — | — | — | 1 | 271 | 22 | 7 | 1 | — | 1 | — | — | 61 | 367 | 8 |
| — | — | — | 2 | 26 | 4 | 6 | — | — | — | — | — | 6 | 44 | 9 |
| — | — | — | — | — | — | 2 | — | — | — | — | 1 | 1 | 4 | 10 |
| — | — | — | — | — | — | — | — | — | — | — | 1 | 36 | 37 | 11 |
| — | — | — | — | — | — | — | — | — | — | 1 | — | 1 | 8 | 12 |
| — | — | — | — | — | — | — | — | — | — | — | — | 3 | 78 | 13 |
| 3 | — | — | — | 2 | — | — | 1 | — | — | — | — | 1 | 20 | 14 |
| 2 | — | — | 42 | 3 | — | 1 | 5 | 1 | 10 | 19 | 15 | 48 | 562 | 15 |
| 2 | — | — | — | 11 | — | 2 | 2 | — | 7 | 2 | 1 | 8 | 87 | 16 |
| 61 | 2 | — | — | 11 | 1 | 3 | 6 | — | 172 | 17 | 40 | 32 | 981 | 17 |
| — | 1 | — | 1 | 62 | — | 2 | 4 | — | 2 | — | — | 2 | 77 | 18 |
| — | — | — | 2 | — | — | 5 | — | — | — | — | 2 | 1 | 10 | 19 |
| — | — | 1 | — | 299 | — | 6 | 1 | — | 1 | — | — | 5 | 347 | 20 |
| — | — | — | — | 8 | — | 3 | — | — | 1 | — | 1 | 5 | 21 | 21 |
| — | — | — | — | 8 | — | 1 | 1 | — | — | — | — | 1 | 11 | 22 |
| — | — | 3 | 2 | 4 | — | 42 | 4 | — | 2 | 5 | 4 | 7 | 73 | 23 |
| 36 | 4 | — | 3 | 3 | — | 4 | 4 | — | 145 | 32 | 23 | 20 | 650 | 24 |
| — | — | — | 2 | 2 | 1 | 6 | 1 | — | 1 | 2 | 1 | 46 | 62 | 25 |
| 16 | — | — | 4 | 63 | 6 | 13 | 7 | 2 | 95 | 17 | 45 | 42 | 884 | 26 |
| 1 | — | — | — | — | — | — | — | — | 58 | — | — | — | 59 | 27 |
| — | — | — | 3 | 2 | — | 4 | 3 | 9 | 11 | 2 | 11 | — | 95 | 28 |
| 1 | — | — | — | — | — | — | 1 | — | — | — | — | 1 | 9 | 29 |
| — | — | — | — | — | — | — | — | — | 2 | 1 | — | 2 | 32 | 30 |
| — | — | — | — | 1 | — | — | — | — | 1 | — | — | — | 3 | 31 |
| 3 | — | — | — | 1 | — | — | 1 | — | 2 | — | — | 3 | 13 | 32 |
| 2 | — | — | 2 | 14 | 1 | 12 | 10 | 5 | 12 | 7 | 9 | 39 | 200 | 33 |
| 3 | 1 | — | 7 | 65 | 1 | 17 | 10 | 1 | 41 | 7 | 24 | 20 | 636 | 34 |
| 151 | 12 | 20 | 74 | 863 | 40 | 142 | 64 | 27 | 684 | 122 | 192 | 425 | 5,649 | 35 |
| 9 | 10 | 11 | 12 | 13 | 14 | 15 | 16 | 17 | 18 | 19 | 20 | 21 | 22 | |

CC-0. In Public Domain. Gurukul Kangri Collection, Haridwar

Digitized by Arya Samaj Foundation Chennai and eGangotri



The number of fires in permanent non-traditional houses was too small for the rates of incidence in the different types to be compared. Pooling the permanent non-traditional houses damaged by fire with the permanent traditional dwellings so affected, the rate of incidence in post-war permanent housing was 3 damaged houses per 10,000 houses at risk per year.

TABLE III

*Rate of Incidence of Fires Attended by the N.F.S. in Great Britain in Occupied Post-war Dwellings, October* 1, 1946, *to September* 30, 1947

| Type of post-war dwelling | Number of house-years ($N$) | Number of damaged dwellings ($n$) | Equivalent number of damaged dwellings per 10,000 dwellings at risk per year ($p$) | Estimated standard error of $p$ ($s$) |
|---|---|---|---|---|
| (i) Temporary: | | | | |
| Type A | 14,772 | 12 | 8 | 2 |
| ,, B | 28,487 | 23 | 8 | 2 |
| ,, C | 24,169 | 23 | 10 | 2 |
| ,, D | 13,724 | 13 | 9 | 3 |
| ,, E | 7,710 | 5 | 6 | 3 |
| ,, F, G, H, I, J | 5,931 | 6 | 10 | 4 |
| Total | 94,793 | 82 | 9 | 1 |
| (ii) Permanent non-traditional | 6,253 | 3 | 5 | 3 |
| (iii) Permanent traditional | 73,227 | 24* | 3 | 1 |

* There was a total of 21 fire incidents: in three of these more than one house or flat was involved.

A comparison of the rate of incidence of fire in the different types of post-war housing with that in pre-war housing is difficult for two reasons: (i) no data are yet available for fires in pre-war housing over the same period of time as was considered above; (ii) no accurate estimate of the number of pre-war houses and flats at risk in Great Britain can be made.

Some information on the number of pre-war dwellings damaged by fire in Great Britain can, however, be obtained from the results of the analysis of the 1946 reports to which reference has already been made. It was found that there was a total of 3,616 fire incidents in the sample analysed, and in 104 of these more than one house or flat was involved. The number of damaged dwellings totalled 3,795.

The Social Survey* estimated the total number of structurally separate dwellings in England and Wales at mid-1945 to be 10,972,600, and the total number of households to be 12,226,600. Their definition of dwelling differs from that used in the analysis of fire reports: for example, the domestic quarters of small shops and public houses which are considered by the Social Survey to be parts of dwellings are not classified here under houses and flats but under the headings "shops" and "public houses"; some of the "households" of the Social Survey are taken as flats in this analysis. Bearing these differences in mind and after consideration of the number of empty bomb-damaged dwellings repaired and made habitable during 1945 and 1946, and the civil populations in England and Wales and Scotland in 1946, it is estimated that the number of pre-war houses and flats at risk in Great Britain in 1946 was roughly 12,000,000.

The rate of incidence of fire in pre-war housing in 1946 is, therefore, estimated as 13 damaged dwellings per 10,000 dwellings at risk per year. It will be seen that this rate is rather greater than the corresponding rates for the different types of post-war housing calculated above.

The spread of fire within damaged dwellings is considered in Table IV. 23 per cent. of the fires in post-war temporary houses and 8 per cent. of those in post-war permanent traditional dwellings spread beyond the room of origin as compared with 11 per cent. of the fires in pre-war houses and 14 per cent. of those in pre-war flats. 12 per cent. of the fires in post-war temporary houses caused serious damage, i.e. damage to more than half the dwelling: no fire in a post-war

* *Population and Housing in England and Wales, mid*-1945, by Geoffrey Thomas, Social Survey, May, 1947.

CC-0. In Public Domain. Gurukul Kangri Collection, Haridwar

Digitized by Arya Samaj Foundation Chennai and eGangotri



permanent non-traditional house caused such damage. The corresponding percentage for pre-war houses was 4 per cent. and for pre-war flats 7 per cent.

TABLE IV

*Extent of Fires Attended by the N.F.S. in Great Britain in Occupied Pre-war Dwellings during* 1946, *and in Occupied Post-war Dwellings October* 1, 1946, *to September* 30, 1947

| Type of dwelling | Fire confined to room of origin | Fire spread beyond room of origin damaging— | | Total damaged dwellings |
|---|---|---|---|---|
| | | less than 50% dwelling | more than 50% dwelling | |
| Pre-war* | | | | |
| (i) Houses | 2,878 | 238 | 115 | 3,231 |
| (ii) Flats | 487 | 35 | 42 | 564 |
| Post-war | | | | |
| (i) Temporary | 63 | 9 | 10 | 82 |
| (ii) Permanent non-traditional | 3 | — | — | 3 |
| (iii) Permanent traditional | 22 | 2 | — | 24 |

* The figures for pre-war dwellings are those actually obtained from the analysis of the one-in-four sample.

The information in the fire census reports does not allow an analysis to be made of the influence of such variables as the type of occupant and the site and age of the building on the rates of incidence of outbreaks. Such a study would necessitate a special investigation of the type considered in the next section of this paper, and in any case there have so far been too few fires to make it possible. When the effect of these variables can be studied, it should be possible to interpret the reasons for the differences between the rates of incidence in pre-war and post-war permanent and temporary housing obtained above, and to draw conclusions as to the effect of the actual post-war materials and types of construction on the risk of initiation and spread of fire in housing as compared with pre-war materials and designs. The present figures are put forward as illustrative of the aim.

## II. Technical Field Intelligence Work and Statistical Surveys

The N.F.S. census reports, which form the basis of the work described above, have necessarily to be brief, and the information is not detailed enough to provide the answers to some problems. Recourse has then to be made to what is termed a "survey." Such a survey involves the preparation of a detailed technical report on every incident or a representative sample of incidents of the type under consideration. The N.F.S. through their Fire Protection Officers and in some instances their Operational Officers have provided the necessary field intelligence service.

For each survey the Joint Fire Research Organization has agreed a draft form of report and explanatory notes on its preparation with the Fire Staff. The draft has then been circulated to the areas where the reports were to be made, and has been discussed later at a conference attended by representatives from the Fire Areas or during visits of members of the Organization to the Fire Areas concerned. The surveys carried out so far have been of a very specialized nature, and their results have been correlated with those of concurrent experimental work. The Statistical Unit of the Organization has given advice in the detailed planning of the survey and subsequent analysis of the reports, but the main work of analysis has been carried out by the specialist who was most closely connected with the experimental research work.

A good example of a survey is an investigation of aircraft crash fires which was made during the war; the analytical work was carried out by Dr. E. W. J. Phillips, to whom the author is indebted for permission to extract the following information from the final report of the survey in order to illustrate in this paper the type of problem and the nature of the results that were obtained.

In the early years of the war some indication was obtained that the marked increase in size

CC-0. In Public Domain. Gurukul Kangri Collection, Haridwar

Digitized by Arya Samaj Foundation Chennai and eGangotri



of aircraft was outstripping the capacity of fire-fighting units to tackle crash fires. A Technical Panel was formed by the Air Ministry to investigate the possibilities of an adequate fire-fighting unit. One of the first requirements was a study of the conditions in which crash fires occurred, so that the problem could be seen in proper perspective and important defects revealed. It was found that existing records did not contain the essential information, and that a statistical survey was necessary. When approached, the Chief of Fire Staff, at that time Commander Sir Aylmer Firebrace, readily agreed that reports should be prepared by the N.F.S. on crash fires attended by them over a period of three months in 1945, and at his suggestion the survey covered the whole country. Staff limitations prevented the reporting of every incident and the question of selection arose. To meet cases in which the crashes became too frequent for the reporting officers to cope with, it was agreed that the first crash to occur after the completion of any report should be selected for the next report. Comparison of records obtained from the Air Ministry with those from the N.F.S. census reports indicated that the sample of crash fires examined was representative of crashes occurring away from airfields and the bulk of the information related to such incidents; the sample was not representative of crashes on airfields.

The investigation covered the three main phases in which an incident involving an aircraft crash fire may be considered: firstly, the observation of the crash and the notification of fire control, secondly, the journey of the fire appliance to the crash site, and thirdly, the control of the fire. The relative and combined importance of each of these phases on the design of crash appliances and on methods of dealing with crash fires was studied. The problem of rescuing occupants of crashed aircraft was not investigated in detail, but note was taken of any special circumstances affecting the possibility of rescue. Only a summary of the results of the analysis of the fire survey reports can be given here.

80 per cent. of "off-airfield" crashes were seen immediately by casual observers, but notification to the fire control was often indirect and slow. The notification period varied from zero, when the fire crew observed the crash directly, to as long as 245 minutes: the average was 12 minutes. In some instances the information transmitted was incomplete or faulty, and an average delay of a further $1\frac{1}{2}$ minutes resulted.

The time taken by the first N.F.S. appliance to reach the crash site varied from 4 to 60 minutes: the average time interval was 16 minutes. The routes encountered were such that it appeared unlikely that the average travelling time would be substantially reduced by increasing the road speed of the appliances above their present average of 28 m.p.h. on metalled roads. It was estimated that even if all the complete journeys had been possible under favourable conditions on metalled roads, the average travelling time would only have been reduced by approximately 4 minutes (i.e. to 12 minutes).

The average time to control the fires was 69 minutes. So far as could be seen from the reports the majority of the fires were no larger than experimental crash fires, which have been extinguished with suitable apparatus in little more than 2 minutes and controlled to a stage at which rescue was possible in an even shorter time.

The general conclusion to be drawn was that, at any rate in so far as incidents away from airfields are concerned, the advantages of the most recent appliances are virtually nullified by the communication and travelling phases, which occupied in the aggregate on the average almost half-an-hour. Future developments in fighting fires in aircraft that crash away from airfields may therefore lie in the use of Radar and wireless for shortening the observation and notification phase; an airborne fire-fighting unit of the helicopter type may be the most promising means of reducing the travelling phase.

The success of this investigation depended on the complete wholehearted co-operation between the scientist and the N.F.S. reporting officer in the field. During the course of the survey visits were paid by scientists to several Fire Force Areas to obtain at first hand supplementary information and to clear up difficulties in the reporting procedure. As already stated, the survey lasted three months. Every effort is made as a general rule to complete the field work in surveys of this kind as quickly as possible, and it has been found of great psychological importance to state the duration beforehand to the officers who make the reports. Sometimes, however, the low frequency of occurrence of certain types of incidents precludes the survey of short duration. At the moment a survey of fires in stored oilseeds has been in progress for three years, and a survey of fires involving the use of smoke exhausters may well continue for a longer period.

CC-0. In Public Domain. Gurukul Kangri Collection, Haridwar

Digitized by Arya Samaj Foundation Chennai and eGangotri



*Acknowledgments*

This paper is published with the consent of the Director of Fire Research, Mr. S. H. Clarke, whom the author wishes to thank for his continued help and encouragement in the work described during the last five years. The author is also indebted to Dr. H. O. Hartley for making constructive suggestions on the manuscript.

## Appendix

### *Method of Analysis of N.F.S. Fire Census Reports by Means of Punched Card System*

*Fire census report form*

When the N.F.S. occurrence report form was introduced on January 1, 1944, it provided not only for the reporting of fires, including those confined to chimneys and flues, but also false alarms and the special services which the Fire Service are called upon to render in emergency, e.g. the rescue of cats from high branches in trees and of persons from drowning, the supply of drinking water to isolated houses in periods of drought. Since then separate simplified forms have been introduced for false alarms and chimney fires, and special services are now also reported on a separate form.

The N.F.S. report form for fires other than those confined to chimneys and flues is a four-page document measuring 10 in. × 7½ in.; it is divided in its present lay-out into seven parts.

I. *Fire Force, Sub-Area, Station, County and Administrative Area*

II. *Call*

1. Date and day of call.
2. Discovered by
3. Method of calling Works Fire Brigade and N.F.S.

4, 5, 6. Weather, road condition, wind.

7, 8, 9, 10. Time of discovery of fire, time of call to and arrival of Works Fire Brigade and N.F.S., and time at which fire was under control.

11. Address of fire.

12, 13. Name of occupier and trade or business carried on where fire started and where fire spread to.

III. *Particulars of fire*

1. Supposed cause.
2. Particulars of property involved.
3. Particulars of contents.
4. Extent of fire indicating in case of buildings whether the fire was confined to the room, floor, roof or building of origin, or whether it extended to adjoining or separate buildings.
5. Description of damage.
6. Behaviour of sprinklers.
7. Fire protection appliances or devices other than sprinklers or portable hand-operated appliances.
8. Method of extinguishing the fire used before the arrival of the N.F.S. and by the N.F.S., and particulars of any water supply relays.
9. Date and time when last N.F.S. appliance returned to station.

IV. *Persons rescued or escaping by emergency means*

Name, sex and age of person rescued or escaping; method of rescue or escape and person effecting rescue.

V. *Casualties*

Name, sex, age and address of casualty; nature of injuries and, if fatal, cause of death.

CC-0. In Public Domain. Gurukul Kangri Collection, Haridwar

Digitized by Arya Samaj Foundation Chennai and eGangotri



VI. *Attendance at fire*

1. Fire Force, Sub-Area and Station from which each of the different appliances listed attended.
2. Appliances other than N.F.S.
3. N.F.S. personnel.

VII. *Any other remarks*

The chimney fire report form is a single page document measuring 6 in. × 7½ in. Information is requested on the following items of the fire report form—Part I, items 1, 3, 9, 11, 12, 13 of Part II, item 8 of Part III, and Part VII; in addition particulars of the property involved are asked for if the property is a post-war house or flat.

To assist the reporting officers in completing the forms detailed notes have been prepared; they are about 10,000 words in length and cannot, therefore, be reproduced here. Both the fire report form and the notes, which were originally issued in 1944, were revised as a result of the experience gained during the experimental run when about 23,000 fire reports for 1944 were analysed, and during subsequent analytical work. The object of the revision was to facilitate uniform reporting from different parts of the country. The value of the trial run in this direction cannot be too strongly emphasized, nor can that of the lectures given at frequent and regular intervals by instructors and occasionally by the author of this paper to officers attending courses at the N.F.S. College, Saltdean.

After the reports have been prepared at the Fire Station they are sent to Sub-Area Headquarters, where they are examined by a responsible officer before being forwarded to Fire Area Headquarters. Here each report is again closely scrutinized by a Staff Officer to ensure that the particulars have been furnished in accordance with the notes on completion. One copy of each report is sent to the Joint Fire Research Organization.

*Lay-outs of punched cards*

The lay-outs of the punched cards which are now being used are shown in Fig. 1. One main fire card is punched for the occupancy or sub-occupancy of the building or other hazard in which the fire started. Fire spread cards are used to record information on the occupancies and sub-occupancies of buildings or hazards in the open to which the primary fire spread. The punched card system is not used for analysing chimney fire reports.

*Code lists*

Of the 38 code lists used mention need only be made of two—hazard involved in fire and supposed cause of fire.

(i) *Hazard involved in fire.*—The list of hazards involved in fire is divided into two parts: (*a*) buildings; (*b*) hazards in the open, e.g. hay rick, wood, rubber dump. The buildings are classified according to their main occupancies in columns 41–45: the code list is based on the classification of industries used for the census returns of 1931.* It is also important to study fires involving trades, etc., carried on within main occupancies which are common to different industries, e.g. the paint-spraying shop in the motor car factory and the aircraft factory. A separate list of these sub-occupancies is therefore used. (Columns 46–48.)

(ii) *Supposed cause of fire.*—In the notes on completing the fire report form the reporting officer is instructed to report the supposed cause of fire in three parts: (A) the source of ignition; (B) the nature of the material first ignited; (C) any acts or omissions which led to the outbreak of fire.

When preparing the code lists, it was found that two different groups of acts or omissions should be distinguished:

$C_A$ acts or omissions leading to the production of, or associated with, the source of ignition, A.

$C_B$ acts or omissions producing, or associated with, the material first ignited, B.

* *Census, 1931. Classification of Industries.* 1934, H.M. Stationery Office.

CC-0. In Public Domain. Gurukul Kangri Collection, Haridwar

Digitized by Arya Samaj Foundation Chennai and eGangotri



FIG. 1.—*Layouts of punched cards*

MAIN FIRE CARD

| Column | Item coded | |
|---|---|---|
| 23–24* | Year | |
| 25* | Type of card | |
| 26–29 | Call number | |
| 30, 31 | Fire Force | FIRE AREA |
| 32, 33 | County | |
| 34 | Administrative area type | |
| 35, 36 | Administrative area | |
| 37, 38 | Day | DATE |
| 39 | Month | |
| 40 | Method of calling N.F.S. | |
| 41, 42 | Order | HAZARD (OCCUPANCY OF BUILDING OR HAZARD OTHER THAN BUILDING) |
| 43 | Sub-Order | |
| 44, 45 | Group | |
| 46–48 | Sub-occupancy | |
| 49 | Type of construction | BUILDING |
| 50 | Number of storeys | |
| 51 | Type of roof covering | |
| 52 | Part first ignited | |
| 53, 54 | $C_A$ | SUPPOSED CAUSE |
| 55 | A1—Type of fuel | |
| 56–58 | A2—Active source of energy | |
| 59–61 | B—Material first ignited | |
| 62 | $C_B$ | |
| 63, 64 | Extent of fire | |
| 65 | Damage | |
| 66 | Sprinklers | FIRE FIGHTING |
| 67 | Personnel | |
| 68 | Foam and breathing apparatus | |
| 69<br>70<br>71 | Method used before arrival of N.F.S. | |
| 72<br>73<br>74 | Method used by N.F.S. | |
| 75 | Number of pumps pumping on fire | |
| 76 | Number of jets | |
| 77 | Number of persons rescued | |
| 78 | Number of persons who escaped | |
| 79 | Number of non-fatal casualties | |
| 80 | Number of fatal casualties | |

FIRE SPREAD CARD

| Column | Item coded | |
|---|---|---|
| 23–24* | Year | |
| 25* | Type of card | |
| 26–29 | Call number | |
| 30, 31 | Fire Force | |
| 32, 33 | Order | HAZARD (OCCUPANCY OF BUILDING OR HAZARD OTHER THAN BUILDING) |
| 34 | Sub-Order | |
| 35, 36 | Group | |
| 37–39 | Sub-occupancy | |
| 40 | Type of construction | BUILDING |
| 41 | Number of storeys | |
| 42 | Type of roof covering | |
| 43 | Part first ignited | |
| 44 | Number of identical hazards involved | |
| 45 | Spread of fire | |
| 46 | Damage | |
| 47 | Sprinklers | FIRE FIGHTING |
| 48 | Personnel | |
| 49 | Foam and breathing apparatus | |
| 50<br>51<br>52 | Method used before arrival of N.F.S. | |
| 53<br>54<br>55 | Method used by N.F.S. | |
| 56 | Number of pumps pumping on fire | |
| 57 | Number of jets | |
| 58 | Number of persons rescued | |
| 59 | Number of persons who escaped | |
| 60 | Number of non-fatal casualties | |
| 61 | Number of fatal casualties | |
| 62<br>63 | Fire spread card reference number | |

* Columns 23–25 are gang punched from master card.

CC-0. In Public Domain. Gurukul Kangri Collection, Haridwar

Digitized by Arya Samaj Foundation Chennai and eGangotri



The supposed cause of fire could therefore be analysed into four parts. To simplify the coding of source of ignition the latter was divided into two parts—namely, the fuel, e.g. coal, gas, electricity; and the source itself, e.g. furnace, radiator, cooker. Five code lists were therefore prepared (Columns 53–62). Three examples of the type of information recorded on the report forms and their analysis on the basis of this scheme are:

1. Curtains (B) blown by wind ($C_B$) on to lighted gas ring (A).

2. Electric fire (A) was knocked over ($C_A$) and set fire to silk dress (B), which was being aired ($C_B$).

3. Wood shavings (B) set on fire by heat from coke stove (A) which was stoked too high ($C_A$).

*Coding of reports*

(i) *Type of staff.*—During the trial run the errors made by the coders were studied. As each coder completed one hundred reports the number of careless errors and errors involving misinterpretation of reported information were determined. From the experience gained as a result of this study and of the staff that have since been used on this work, it is considered that girls in the early twenties who have overcome the instability associated with the "teen" ages are the most suitable for this type of coding: their intelligence should preferably be equivalent to that required for passing the School Certificate Examination.

(ii) *Method of coding.*—At first the code numbers were recorded on the report forms by the coders and the cards were punched from these figures by separate punch operators. The report was originally divided into nine sections which were coded separately. A coder was trained in one section, and after becoming proficient she was taught to code another section and so on. When the system was first simplified after the experimental run the report was divided into two parts for coding. After a time it was found that one girl was coding the whole of each report at once. The other girls soon learned to do the same.

The natural development was to eliminate the process of writing the code numbers on the form and to punch the cards direct from the reported information. This procedure was tried, found to be successful and has been followed ever since. The rate of code-punching, as this method has been termed, varies considerably with different girls: the average for fully trained girls is about 140 fire reports per working day.

Originally the punched cards were verified using a verifying machine, but recently the method of checking the tabulated information obtained after passing the unchecked cards through the tabulator has been adopted. It provides a change in the type of work and helps to prevent monotony.

*Sorting and tabulation of punched cards*

The sorting of the cards and tabulation of the information for the original experimental run were carried out by the Admiralty and the Ministry of Aircraft Production. The work required for both the preparation of the annual statistical returns and for analyses used for research purposes is now being carried out by the Mathematics Division of the National Physical Laboratory.

## DISCUSSION ON MR. WALLACE'S PAPER

Sir WILLIAM ELDERTON said that this joint venture of the Fire Offices' Committee and of the Department of Scientific and Industrial Research seemed to him so interesting that he was glad to have it brought to the notice of the Society. He felt sure that as time went on much of value would result from the efforts of the Joint Committee, and he hoped that sooner or later valuable statistical information would be forthcoming which statisticians might have the privilege of studying. Was there any other arrangement—perhaps there was, but he did not know of it—in which industry and the Government were working as joint partners in such a venture as this, and in

CC-0. In Public Domain. Gurukul Kangri Collection, Haridwar

Digitized by Arya Samaj Foundation Chennai and eGangotri



which the industry, as in this case, need not mind very much whether the rate of loss was decreased or not, as the premium might cover any rate of loss?

Reference was made in the early part of the paper to the size of fires, and in Table IV some examples were given which showed the proportion of the extent of fires. To give an idea of the large proportion of small fires, he might mention that among fire insurance claims generally—certainly among those he had seen—about 98 per cent. were for less than £50, and about 70 per cent. for less than £5. That gave an idea of the large number of small claims, and accentuated what was said, that many fires were never seen by the N.F.S.

With regard to the random (one-in-four) sample of reports, bearing in mind the items that had been collected in the census, he did not see why it was not good enough to take nos. 1, 5, 9, and so on. If the reports were strictly in chronological order, it seemed unnecessary to carry out the procedure stated in the footnote.

His second difficulty concerned the statement that the standard error of $p$ ($s$) was determined on the assumption that the value of $p$ for each type of dwelling had been calculated from a sample taken from a homogeneous Poisson distribution, using the formula set out in the paper. He would have preferred to say that if $P$ was the probability of a building suffering from fire and $Q$ was $1 - P$ then an ordinary binomial expansion gave $\sqrt{(NPQ)}$ as the standard error and as $Q = 1$ this became $\sqrt{NP}$, and $\sqrt{n}$ could be used for Table 3. And as nobody had ever heard of $\chi^2$ the conclusion reached by using it would, anyway, have appeared obvious.

The author had referred to the estimate of incidence of fire in pre-war housing in 1946 as 13 damaged dwellings per 10,000 at risk per annum, and had suggested that it might be possible to make a comparison between pre-war and post-war buildings. It would be excellent to do that, but there were many difficulties which stared one in the face—the relative age of the buildings, differences of size, types of occupier, and the state of repair of old buildings—partly because of the war itself and partly also consequent upon the necessity now of a licence for repairs. Unless all these differences were borne in mind it might be easy to reach wrong conclusions from any figures so obtained. That was no reason, of course, why they should not try to compare; the remarks were intended as a warning.

He would suggest that Table I should be carefully studied by those of them who were smokers, and who might well, studying the large number of fires attributed to smoking materials, be terrified at the risks they ran. Those of them who had children would also do well on these figures to see that they did not play with matches. If smokers and children were eliminated fire insurance premiums could be much reduced!

One thing which might be done in the discussion was to suggest some possible lines of research to the committee. He had no personal experience of fire insurance except for one small fire in a house he owned, but might it not be possible that the distribution of fire damage in certain cases was of a sequence type? If so, it might be possible to study a lot of the variations between different types of fires according to cause and origin, grading different sequences and working out different common ratios. He threw that out as a suggestion though he was well aware of the difficulties of carrying it out and drawing conclusions from what was elicited.

He would suggest to the author that when his paper appeared he should make it clear in all his tables and text whether he was dealing with buildings only, with the contents of buildings only, or with both, because in many of the cases it was not clear.

He supposed that the ideal would be to eliminate fire. Such an elimination would have an unfortunate consequence; it would deprive many of his friends of their jobs. It would send fire insurance up in smoke! Notwithstanding that remote possibility, he proposed a hearty vote of thanks to the author.

Mr. R. E. BEARD, in seconding the vote of thanks, said that one of the most striking features of the paper was the virtual absence of references to other works on statistics of fires, and he would like to make a brief reference on this aspect. It was worthy of note that a paper appeared in the very first volume of the Society's *Journal* in 1838 entitled "Fires in London with an Account of the London Fire Establishment." In volume 40, published in 1877, appeared the monumental essay by Cornelius Walford entitled "On Fires and Fire Insurance under Historical, Financial, and Statistical Aspects." It included summaries and comments on the data contained in Captain Shaw's book—the only reference in that evening's paper. Walford also gave figures relating to London fires for a further twelve months. Each year until volume 50 a short note appeared summarizing the fires reported in London during the previous year, but no subsequent references appear.

The first volume of the *Journal of the Institute of Actuaries* appeared 98 years ago and contained a paper by Samuel Brown entitled "Fires in London during 17 years from 1833 to 1849."

CC-0. In Public Domain. Gurukul Kangri Collection, Haridwar

Digitized by Arya Samaj Foundation Chennai and eGangotri



The data forming the basis of this paper were also those included in Capt. Shaw's book. Subsequent journals included yearly reports on the record of London fires. In addition to being statistical analyses, they included descriptive passages of items of particular interest. Mr. Beard read a description of a minor fire which showed that research into these old papers could be amusing as well as instructive.

Papers on various aspects of fire causation, prevention, and insurance had been read to the various Insurance Institutes throughout the country, but these had not been illustrated by statistical analyses. The various textbooks on these subjects which had appeared in this country were also deficient in this respect. The absence of statistics in this country had precluded any attack on the problems involved by the powerful analytical methods which had been developed in recent years, and it was mainly to the continent of Europe that one had to turn for any recent developments. Some interesting papers had been read at various International Congresses of Actuaries. A considerable literature on fires and fire insurance, backed up with statistics and containing applications of statistical methods was to be found in the *Journal of the German Fire Insurance Society*. Of the various textbooks he would refer only to Sergowski's *Theorie der Feuerversicherung*, originally published in Russian in 1924, but a German edition of which was published in 1931. In addition to discussing the nature of fire statistics this book gave fairly extensive figures relating to Russian experience up to the year 1910. There were, of course, many other references to the subject, especially in American literature, but the few instances he had quoted would show how deficient was the study of fire statistics in this country.

Of what value were the statistics now being prepared? Statistics of fire were valuable for three main reasons: (1) the study of the general structure of fire loss with a view to preventive treatment; (2) assistance in the assessment of proper insurance premiums; (3) the improvement of the efficiency of the fire service.

As regards (1) the statistics now presented provided an indication of the distribution of fires by causes and hazards, but the relative importance of the various factors could not be discovered. Fire loss was a compound of ignition frequency and damage degree, and the former could only be properly assessed with a knowledge of the exposure. Samuel Brown recognised this in his paper in the first volume of the *Journal of the Institute of Actuaries*, and endeavoured to relate London fires in the period 1833–49 to the buildings at risk for various trades. His results showed ignition frequencies ranging from 3·4 per mille for grocers to 300 per mille for match-makers. From his figures a rough estimate could also be made of the ignition frequency for private dwellings, and it was interesting to note that a figure of about 9 per mille was shown, being of the same order of magnitude as current experience. It was clear that the calculation of ignition frequencies on a national scale was a matter of considerable complexity and the attempt in this evening's paper at even a very limited study for private residences showed how difficult the problem was. He was, however, not sanguine that the calculation of ignition frequency on a national scale was of any real value; the data concerned were too heterogeneous.

He had referred above to the influence of occupancy on the rate of fire loss. There were many other factors which the statistics as presented that evening concealed, although the punched card layout suggested that some provision had been made for their study. One very important aspect was the material from which the roof was made. Einfeld, in the 11th T.I.C.A., quoted figures relating to fires in Poland, excluding Warsaw, and pointed out that with every outbreak of fire 3·1 buildings were involved, the reason being the extensive use of wooden structures and thatched roofs. He also pointed out that the ratio showed a considerable variation according to the nature and size of towns. Another factor of vital importance was the size of the risk. Various attempts had been made to develop a theoretical approach to this problem, the first, apparently, being due to Von Savitch. Berge in the 11th T.I.C.A. quoted some figures relating to the experience of dwelling houses in Sweden, and a study of one set of his data showed that the ignition frequency varied roughly as the two-thirds power of the value of the house. There were theoretical considerations why this result might be expected. With such a large variation in ignition frequency with size of property it must be concluded that statistics relating only to fires represented a special sample of the population and must be treated accordingly. In particular the comparison made in the present paper as between temporary and permanent houses was of little value as it was clear that the smaller houses would be expected to show lower ignition frequency than the average of all houses.*

In illustration of this point he would again refer to Einfeld's statistics. Data extending over a period of six years and consisting of approximately 15,000 fires a year were available, and calculation of the standard deviation of the ignition frequency from these data showed that for this

* Whilst in the particular application in the paper the form assumed for $p(s)$ was satisfactory, great care must be used in other applications.

CC-0. In Public Domain. Gurukul Kangri Collection, Haridwar

Digitized by Arya Samaj Foundation Chennai and eGangotri



number of claims, the formula quoted in Mr. Wallace's Paper had to be multiplied by a factor of about 12. He would not now discuss the reasons for this substantial discrepancy.

Fire risk was, no doubt, closely connected with the age of buildings, and not only with physical deterioration of the property, but also with changing customs in the building trade. In illustration of this latter point the fires in private residential houses arising from fires in grates igniting the structural timber under the hearth might be considered. This group represented the second largest frequency, namely, 400 out of the total of 6,964. He had questioned a fire surveyor on this point and he told him that in his opinion such fires occurred with greater frequency amongst more modern houses owing to the use of unsuitable materials and faulty construction. In support of this it was interesting to note that out of 1,649 fires in private dwellings during the years 1843 to 1849 only three were identified as due to this cause.

With regard to the other factor bound up with fire loss, namely, the damage degree, a considerable amount of information had been collected in other countries, mainly from the records of insurance companies. Some very interesting frequency distributions emerged from this material. The limited data that would be available from the census report would furnish only scanty details of this extremely interesting and vitally important feature of fire losses. He could make only passing reference to other factors such as geographical location and population density, both of which had profound influence on the incidence of fire loss and which had been studied elsewhere.

On the second point, namely the question of the use of such statistics for assessing insurance premiums, it might be inferred from the remarks he had already made that he saw no application for them in their present form for this purpose. Fundamentally, insurance premiums depended on ignition frequency and degree of damage, and neither of these two factors was adequately dealt with in the fire census. The problem was perhaps paralleled by calculating rates of premium for life insurance, where it was found that the experience of the general population was unsuitable for lives selected by medical examination, and special mortality investigations had to be made.

The final point was the question of using the statistics to measure the efficiency of the Fire Service. The lay-out of the cards showed that analysis along these lines was contemplated and the study in the present paper of one particular aspect was of considerable interest.

In these remarks in seconding the vote of thanks it had been possible for him only to touch very briefly on a few of the main points involved in the analysis of fire statistics. The subject was difficult and required extremely critical judgment. The theoretical foundations called for very careful study as it was abundantly clear from such statistics as were available and the analysis made in other countries that homogeneity was rare and variation was seldom of a simple kind. Nevertheless he was of opinion that fires offered a field rich in opportunity for adequate statistical analysis. Modern developments such as correlogram analysis to deal with the secular trends and analysis of variance were just the type of tools for this work. He hoped that the Joint Fire Research Organization would live up to its name and that the shortcomings of the data provided from the Fire Service statistics would be made up by that available from insurance companies, so that those of them interested in the statistical analysis of fires and in fire insurance might have suitable material on which to work.

The vote of thanks was put to the meeting and carried unanimously.

Mr. TUCKEY said that in the case of private houses at least 75 per cent. of fires—possibly more, perhaps even 80 per cent.—were never attended by the National Fire Service, and this made it very difficult at the present time to collect reliable information. He thought that the most important thing to ascertain was the cause of fires. Here he was thinking of industrial fires more particularly. He hoped the time would come when they could get more information as to the cause of a fire as applied to each particular industry.

He added that he had worked with Mr. Wallace for many years and he looked forward to working with him in the future.

Lord FALMOUTH expressed appreciation of Mr. Wallace's interesting paper. He had been associated with the author from the beginning of the work and had been pleased to note its development, which had depended to a great extent on the interest and collaboration of the National Fire Service.

He recalled that use had been made of statistical surveys in studying a number of war-time problems, for instance, in comparing the effects of high explosive and incendiary bombs. It had been found that whereas the former rarely initiated fires in any surroundings, flour mills were a notable exception in that whenever a high explosive bomb exploded in their proximity there was the likelihood of a secondary flour dust explosion, which frequently occasioned an immediate widespread outbreak of fire. Statistics were used to good effect in the analysis of this problem.

CC-0. In Public Domain. Gurukul Kangri Collection, Haridwar

Digitized by Arya Samaj Foundation Chennai and eGangotri



Mr. S. H. CLARKE said that reference had been made to the fact that the Joint Fire Research Organization was a body set up by the Department of Scientific and Industrial Research and the Fire Offices Committee, and it was true that this was the only example of co-operation of this kind; it was something to be welcomed. As to whether there was any prospect of research being pursued to the ultimate end of removing fire risk altogether, the answer must be "no." If there were members of the fire insurance world present, they need have no fear on that score. It would be possible with existing knowledge to render a large proportion of fires impossible, but it would be very costly, and the amount that would have to be spent on individual buildings would far outweigh the small amount of insurance premium now paid. To render all fires impossible would be quite uneconomic.

The relatively low risk of an individual outbreak which made insurance a satisfactory precaution was, of course, at the root of the difficulties of Mr. Wallace in pursuing his studies. He appreciated the points raised by the preceding speakers; they had touched on difficulties which were very real. The paper had dealt rather with the manner in which the author had gone about collecting information and preparing it than with the actual use of it, but he thought that perhaps a close reading of the introductory portions of the paper would reveal the answer to some of the questions which had been raised.

Statistics relating to fires had been collected in other countries, but in some cases examination of the manner of their collection left doubts as to their validity.

It had been rather a shock to learn that it was not known how many houses there were in this country, nor how many houses of any particular kind of construction. The value of statistics of causes of outbreaks was distinctly limited when it was impossible to relate them to the numbers at risk; that was one of the things which Mr. Wallace was trying to put right.

A feature of interest in starting this work, and to which Mr. Wallace had referred, was the training of staff in handling the data.

Another point of interest mentioned in the first part of the paper was the large number of sources of fire information. Not only was there co-operation between the Department of Scientific and Industrial Research and the Fire Offices Committee, but information was regularly provided by a number of Government Departments, including the Service Departments.

Major JACKSON said that he was a member of the organization headed by Mr. Tuckey who had already spoken. Their job, or at least one of their jobs, was to try to put over to the public the findings of the Research Organization, and they would try to make evident the lesson to be derived from the statistics. He was delighted with the way in which Mr. Wallace had tackled this work in the face of what had at first seemed to be insuperable difficulties, and he thought that that evening they had seen the first fruits of it. He had been particularly pleased to hear Sir William Elderton's interesting speech in opening the present discussion.

Mr. Clarke had already touched upon the question of the numbers at risk, without which true statistics would not be available. Leaving on one side the dwellinghouses at risk, it might be easier to deal with other buildings such as cotton mills and paper mills, which were not, like dwellinghouses, almost uncountable. He believed that Mr. Wallace had this matter well in mind and that some results would be forthcoming during the next year or two.

One speaker had mentioned the question of statistics from other countries. Some of these statistics were quite useless, others were of use up to a point. For example, statistics were kept in Paris, though not on anything like the basis adopted by Mr. Wallace. The French were a very logical race and had been keeping statistics for a number of years. A rough scrutiny suggested that the results were similar to those obtaining in Britain. For example, the loss of life due to fires was very much of the same order in Paris as in London. That very day in the office of the organization they were asked quite seriously whether in a town in the West Indies, where they had 47 fires last year and something over 40 the year before, the number was to be considered as abnormal. It was not impossible to find data to answer such a question, and perhaps he should mention that the figures given by Mr. Wallace in his paper were by no means all that he had available.

He thanked Mr. Wallace once more for a most interesting paper.

Mr. BOSS said he thought that everybody would realize that this paper was a very substantial piece of work. It was work which had been carried through with very considerable economy of effort and a great degree of efficiency. He spoke as one who had better opportunities than most of observing it and he wished to put that fact on record. There were several reasons why the result was so excellent, but the chief was the enthusiasm of the people concerned. The investigation had also been singularly fortunate in that it had been possible to carry it out as a

CC-0. In Public Domain. Gurukul Kangri Collection, Haridwar

Digitized by Arya Samaj Foundation Chennai and eGangotri



piece of research work under one control. Another factor which had helped very considerably was the punched card system as a method of analysis of N.F.S. fire census reports.

One point to be made was that this work had been carried out under the control of the people who had collected the data. He was not sure that that was often the case, but he believed it was the proper method to pursue, namely, that the people who actually got the data should bear the responsibility for the preparation of the cards. In this particular case the procedure had worked exceedingly well. He wished, however, to add this one word of warning, that owing to the lapse of time the machine for handling the cards in the later stages was not in existence when the investigation was started, so that there was some break in continuity. It was an initial experiment, and had had a temporary effect on the cards produced. This was one of the accidents for which nobody could be blamed, but it was worth mentioning. He repeated that the people preparing the cards should have an idea as to how the cards were being used.

One other matter which seemed to him serious, though it had nothing particular to do with the subject of the present paper, was that by repeated attempts bigger and bigger forms were being produced to be filled in, but at the same time the method of handling such forms had not been correspondingly improved. The code function mentioned in the paper was about the nearest attempt to a satisfactory system of which he knew. But at the same time there was a certain admission of defeat whereby much of the large-scale work had to be got out by hand and invention at this particular point was rather slow.

The only other matter to which he wished to refer was the assistance which the investigation had received by being carried out from the machine point of view on a large scale machine. The collection of cards for one piece of special investigation was a matter in practice of approximately half a day's work on a Hollerith collector. Although the present standard machines gave marvellous results in investigations of this sort it still remained true that the ideal plan for this class of work was not yet available, nor would it be available until more people asked for it. It was up to other people to improve the approach from the machine point of view.

Mr. N. ELLIOTT said that there were some very important conclusions to be drawn from investigations of this nature, and he was quite sure that the one which he had in mind, and which was of rather a detailed character, was one which the author had not omitted from his consideration. Therefore, he desired to ask merely a question, namely, whether it would be possible in the future to carry out these statistical analyses further into the causes of fires. He had in mind particularly the electrical causes.

In Table I they were given the supposed cause of fires in buildings in relation to hazard in which the fire started, and he noticed a compound statistical item, No. 9, fires started by electric fires, heaters, and radiators. These accounted for 238 fires in the one-in-four sample of reports from Great Britain in 1946. In Item 12 there were listed fires due to electric wires and cables, numbering 527. When one was considering the origin of fires these two items were totally different, and did not come into the same category. Electric fires, no doubt, in many instances caused the building to burn because the fire was left on near some inflammable material or because the apparatus was overturned. That was not in itself an electrical fault at all, whereas in Item 12, dealing with electric wires and cables, the incidence of a truly electrical cause must be very much higher. Would it be possible to obtain information on such details as the incidence of fires with various forms of wiring systems so that the electrical industry might obtain the information which it badly needed, that is to say, the relative risks which attached to the various wiring systems, having in mind the forms of construction and their comparative cost?

The PRESIDENT said that he desired to call attention to one point in Table IV where the author classified as a serious fire one which spread to more than 50 per cent. of the dwelling. It seemed to him that in this way, if a fire involved only two of the three rooms in a prefabricated house it would be regarded as a serious fire whereas if it involved twelve rooms in a 25-room mansion it would not, and this did not seem to be a very satisfactory classification. It might be that there was some history attaching to this classification and he would like to know what it was.

He congratulated Mr. Wallace on his paper. He had frankly called attention to the weaknesses in his data and to the necessity for caution in drawing conclusions from them. He had made out a strong case for the continuation of this information obtained from the wide investigation of fires, and it was to be hoped that the change from the National Fire Service to local fire services would not interfere in any way with the collection and analysis of such data.

Mr. J. WALLACE thanked the members for the way in which they had received his paper. If they had enjoyed that evening's meeting their thanks should be addressed to the Hon. Secretary, Professor Bradford Hill, because it was he who had induced him to write the paper. The kind remarks of Sir William Elderton and the President and others had justified him in succumbing



CC-0. In Public Domain. Gurukul Kangri Collection, Haridwar

Digitized by Arya Samaj Foundation Chennai and eGangotri



to Professor Bradford Hill's persistence which had extended over nearly two years. He wished to thank Professor Bradford Hill for giving him this opportunity of telling the Society something about the statistical work of the Joint Fire Research Organization.

He had been most interested in the points which had arisen during the discussion, particularly the suggestions made by Sir William Elderton for future work.

In reply to Mr. N. Elliott, Mr. Wallace said that the relative risks of different wiring systems could not be determined from the data that appeared in the fire census reports. The reports referred to every sort of fire from a small domestic outbreak or the burning of a rick to the destruction of an entire mansion or an industrial works: one could ask for only a small amount of information concerning each incident. But, a survey of the type described for aircrash fires could be carried out to study this problem. From the detailed coding of the census reports, it would be possible to select those fires that originated in electric wire or cable: these incidents could be re-examined to provide the more detailed information required.

Mr. Beard had referred to the importance of the nature of the roof covering in fire losses. Mr. Wallace explained that roofs were classified into nine different types, of which the thatch roof was one. The Organization had lately been considering the fire susceptibilities of different types of roof, but as Mr. Clarke had mentioned, there was always the difficulty in this kind of work of not knowing the precise numbers at risk. No one knew how many thatched roofs there were at risk in one county, let alone the whole country. The only way of comparing the risk of ignition of the thatched roof with that of the tiled or slated roof was to take all the fires in a particular type of building, say a dwelling house, and extract the fires that started in the roofs and the fires that did not start in the roofs. One might then make the rather bold assumption that the rate of incidence of fires that did not start in the roofs would be the same for the thatched roofed houses as for the slated or tiled roofed houses and thus obtain an estimate of the ratio of the numbers of the two types of roofs at risk. Knowing the numbers of fires starting in the roofs, the ratio of the fire susceptibility of the thatched roof to that of the slated roof could be calculated.

Mr. Wallace subsequently wrote as follows:

The decision not to select reports nos. 1, 5, 9, etc., mentioned by Sir William Elderton, for the one-in-four sample was made in order to avoid the possibility of choosing a biased sample from those Fire Areas where the frequency of outbreaks was about four per day.

In Table I, only fires that occurred in buildings are considered and they are classified according to the hazard in which the fire started: "the hazard" can be defined as the main trade or business carried on in the building. The structure of the building only, and the contents only or both building and contents may have been damaged in a fire. In Tables III and IV and the text relating to them, a "damaged dwelling" is defined as one in which damage of any or all of these categories occurred.

With reference to the President's query, the choice of the definition of a serious fire as one that damaged more than 50 per cent. of a dwelling instead of one that caused complete destruction was made because it seemed more reasonable to include those fires which did not cause the complete destruction of the dwelling but sufficient damage to make it uninhabitable, with serious fires rather than to classify them with those which damaged little more than the room of origin and did not render the occupants homeless.

As a result of the ballot taken during the meeting, the candidates named below were elected Fellows of the Society:

Henry James Adams.
Peter Armitage.
Edward Henry Michael Badger.
Robert Moir Davie.
Charles Geoffrey Edge.
David Rhys Evans.
John Philip George Grosvenor.
Sir John Austen Hubback.
Shital Prasad Jain.
Catherine Margaret Jenkins.
Betty Rona Nevard.
Robert Enoch Pickard.
Arthur Alan Pritchard.
Margaret Shelly Rix.
Rudy G. Spencer.
George Leslie Thirkettle.
Alan Evans Thomas.
Cecil Harry Thompson.
Gerhard Tintner.
Bernard Ungerson.
Sundri Vaswani.

*Corporate Representative*

William Jamieson, *representing* Anglo-Iranian Oil Company Ltd.

CC-0. In Public Domain. Gurukul Kangri Collection, Haridwar

Digitized by Arya Samaj Foundation Chennai and eGangotri



# United Kingdom Merchant Shipping Statistics

By M. G. Kendall

## Introduction

1. Very broadly speaking, the statistics of United Kingdom merchant shipping fall into three groups. The first comprises information about the ships themselves, their number, tonnage, ownership, age and so forth. The second comprises data concerning their employment. The third comprises financial and economic information, such as their earning capacity, freight levels, contribution to the invisible export account and the capital structure of the industry. I shall review them in this order with the object of indicating what types of information exist, and shall give a few tables to illustrate the main features of the shipping industry as it exists in 1948.

2. Something must first be said, however, concerning definitions. There is no statutory definition of a "British ship." The Merchant Shipping Acts provide a negative definition by stating that a ship is not British unless wholly owned by British subjects or corporate bodies established in some part of the British Dominions, and having their principal place of business in those dominions. The consequence is that in the preparation of shipping statistics it is sometimes difficult to say whether a ship should be regarded as belonging to the U.K., to one of its colonies, or to a dominion. There are registers of ships in all three, and sometimes a company domiciled in and operating from one will register some of its ships in another.

3. The Merchant Shipping Acts (and there are parallel requirements in other parts of the Commonwealth) do, however, make it obligatory, with some minor exceptions which need not concern us, for every British ship to be registered. The registers kept under this legislation may thus be regarded as defining the class of British ships. Unless the contrary is stated, I shall take a vessel to be of the nationality of her registration whether or not she is owned and controlled by a company with its principal place of business in some other British country. We then have three broad classes of "British" ships, those on the U.K., Colonial and Dominion registers respectively. Sometimes the word "British" is used loosely to cover only U.K. vessels—a practice which leads to confusion and should be avoided. In this article I shall be dealing in the main with U.K. vessels.

4. Not all the ships on the British registers are merchant ships in the sense of carrying cargo or passengers, though they may be trading in a more general sense. Fishing vessels provide the most important class of exceptions, but there are others, such as dredgers and light-vessels. (War ships are not on the register.) Nothing in the registers themselves indicates directly whether a particular vessel is a merchant ship, though one can make a good guess in most cases. Definite information has to be derived from other sources. For my present purposes these non-carrying types are to be excluded. Since most cargo-carrying vessels with power propulsion are over 100 gross registered tons we may define the domain of discussion, the British merchant fleet, as comprising all vessels of 100 g.r.t. or over on a British register engaged in the carriage of goods or passengers by sea.*

5. The preparation of accurate statistics of numbers and tonnage of ships is relatively easy, for they are all registered and the total number is less than 10,000. The population is, however, so heterogeneous, ranging in *size* from the dumb barge to the "Queen Elizabeth," in *employment* from estuarial and coasting tramping to high-class passenger traffic, and in *location* from home waters to the far Eastern seas, that a considerable amount of sub-classification is necessary before tabulated statements of tonnage or numbers acquire the most serviceable significance. Some of the problems raised by this remarkable range of type and service are referred to again below.

6. There is one basic source of information about the ships themselves, which is even more important than the official registers—the Register Book of Lloyd's Register of Shipping. This body (which is distinct from Lloyd's Underwriters) is one of several classification societies whose

* In 1938 there were 712 powered vessels of 53,000 gross registered tons below the limit of 100 g.r.t. apart from motor vessels under 50 g.r.t.

CC-0. In Public Domain. Gurukul Kangri Collection, Haridwar

Digitized by Arya Samaj Foundation Chennai and eGangotri



surveyors periodically examine ships and "class" them—the class-mark "A1 at Lloyd's" being a familiar expression. This work of surveying (which is distinct from certain statutory surveying necessary to protect the safety of life at sea) is undertaken in order to keep the vessel up to standard. It is not a legal requirement, but in practice nearly all vessels are classed. Lloyd's Register, in addition to being the premier classification society, issues a register listing the vessels of the world (whether classed by Lloyd's or not) with their class-mark and a specification of their main characteristics.

The register is kept up-to-date weekly, and provides information of unrivalled thoroughness and completeness. Every British sea-going merchant ship is recorded in this book—or, at least, if there are any exceptions they are negligible for statistical purposes.

7. The statutory registers and Lloyd's Register provide a wealth of information about the ships themselves and their owners, although even here there are certain items of information (such as deadweight tonnage and type of ship) which are incomplete. The other main sources of information about the U.K. merchant fleet may be roughly classified into three groups:

(a) *Trade Organizations*

The Chamber of Shipping of the United Kingdom includes among its membership practically the whole of the U.K. fleet of tankers, coasters and tramps, and the greater part of the Deep Sea Liner tonnage. The Liverpool Steam Ship Owners' Association consists mainly of liner tonnage, some of which is also entered in the Chamber of Shipping. These two bodies together cover practically the whole U.K. fleet. They issue Annual Reports, which contain some very valuable statistical information.

(b) *Government Departments*

Apart from the keeping of the Register under the Merchant Shipping Acts, various Government Departments, particularly the Ministry of Transport and the Board of Trade, regularly publish statistical information concerning British Shipping in one aspect or another.

For example the Board of Trade compile figures of entrances and clearances of British and Foreign tonnage at U.K. ports which appear in the monthly Trade and Navigation Accounts and the *Board of Trade Journal*, and in more detail in the Annual Statement of Navigation and Shipping. During the war and in the subsequent period of control the Ministry of Transport has also had to collect a great deal of information concerning shipping and its employment, though much of it is not published.

(c) *Miscellaneous*

Some of the shipping journals publish a certain amount of material which they themselves compile, mainly from other published sources. There are, in addition, a number of local authorities, e.g. those concerned with docks and harbours or with pilotage, which produce a certain amount of information in the course of their duties. Such information is usually confined to one area, such as a particular port, but may, nevertheless, be of substantial statistical interest. One or two authorities abroad, such as those responsible for the Suez and Panama Canals, also issue statistical statements, which throw some light on such matters as volume of ocean traffic.

## STATISTICS OF THE U.K. FLEET

### *Tonnage*

8. Perhaps the most fruitful source of misunderstanding in the whole realm of shipping statistics arises from the different types of "tonnage" used in measuring the capacity of ships. Most shipping statisticians can tell hair-raising stories of high administrative decisions which have been taken on figures relating to one sort of ton under the impression that they related to quite a different type.

We may dismiss from consideration at the outset the "displacement tonnage" used in measuring the size of warships. Roughly speaking, this is based on the weight of sea-water displaced by the vessel, which, in accordance with Archimedes' principle, is equal to her actual weight. There is no measure of this type in general use for merchant ships, and we shall be concerned with three other measures, "gross," "net" and "deadweight" tons.

CC-0. In Public Domain. Gurukul Kangri Collection, Haridwar

Digitized by Arya Samaj Foundation Chennai and eGangotri



9. The measurement of a ship's capacity in tons dates from medieval times, but in early days there seems to have been some confusion about the precise meaning of the word "ton," which was connected both with the ton weight and with the tun of wine. Present practice was stabilized by the Merchant Shipping Act of 1854, which was the outcome of an inquiry undertaken by the Government to secure greater uniformity in the measurement and registration of British vessels. Prior to the passing of the Act, a Mr. George Moorsom applied a certain system of measurement of volume to all the British ships registered at the time, and found that the total capacity of vessels registered as of 3,700,000 tons was 363,412,000 cu. ft. or 98·22 cu. ft. per ton. This figure was rounded up to 100 cu. ft. per ton for the purposes of easier calculation, and since 1854 the gross registered *tonnage* of a vessel has been ascertained by taking the volume of its enclosed spaces in cu. ft. and dividing by 100.

10. The gross tonnage is therefore not a measure of weight but is effectively a measure of volume. There is some variation nowadays between different countries as to what constitutes "enclosed" space, but generally speaking companion ways and galleys, together with open shelter-deck spaces and super-structures, are excluded from enclosed spaces for the purposes of ascertaining gross tonnage. G.R.T. is a statutory figure ; it is used for registration purposes, for many comparative statistics, as a basis for subsidization in certain countries and for the figures of ship-building output published in the U.K.

11. G.R.T. measured in this way obviously is not itself a measure of the carrying capacity of the vessel. The so-called net registered tonnage (N.R.T.) was originally an attempt to represent the earning capacity of merchant vessels in terms of space available for cargo and passengers. Like G.R.T. it is expressed in "tons" of 100 cu. ft., and is fundamentally a measure of volume. It is ascertained by deducting from the gross tonnage allowances for certain spaces occupied by machinery, by the ship's company, by ship's stores and so forth. N.R.T. is generally used for the calculation of port dues and charges, light dues in the U.K., statistics of entrances and clearances at ports, some canal dues and some time-charter rates of hire.

12. It is a curious fact that we are able to make some estimate of the gross tonnage of Noah's Ark, the first ship recorded in history or legend. It is described in the Bible as having 300 cubits in length, 50 in breadth and 30 in depth. If we may assume that it was built in rectangular form and if the cubit is taken as 18 inches, the gross tonnage of the Ark would not have exceeded 15,000 tons—about one-fifth of the size of the "Queen Mary" or the "Queen Elizabeth."

13. The third principal measure of tonnage in use is deadweight tonnage (D.W.T.), which is a true measure of weight, and represents the maximum tonnage of cargo and fuel which can be carried when the vessel is down to its summer load line. The actual deadweight carried on any particular voyage will, of course, vary according to the nature of the cargo, the route and the time of the year, but with optimum loading the available space may be filled by a weight of cargo and fuel approximating to the deadweight tonnage.

Deadweight tonnage is widely used in relation to tramps, tankers, and to a less extent, cargo liners; but it is clearly not an appropriate measure for passenger vessels since it represents only the space available for cargo and bunkers, which is of minor proportions when most of the space is occupied by passenger accommodation. The D.W.T. does not itself measure the actual tonnage of cargo since it includes bunkers, which on a long voyage may amount to 15 or 20 per cent. of the D.W.T. It is, of course, impossible to attach to a ship, irrespective of circumstances, a figure which represents the weight of cargo which it can carry.

14. The ratio between the three kinds of tonnage depends on the size and type of ship. A small vessel of 100 tons g.r.t. would probably have nearly the same figure for d.w.t. As a rough measure for ocean-going tramp tonnage at the present time, it may be taken that 100 net tons equals 165 gross tons equals 250 d.w.t., the ratio of deadweight to net tonnage for cargo liners and tankers being rather lower. A more detailed analysis of the pre-war U.K. fleet is given by Isserlis (1938), but post-war figures are probably different because the ratios are altering all the time as the design of ships changes. A rough rule for a mixed fleet of tankers, tramp and cargo boats is to increase the g.r.t. by about 50 per cent to convert it to d.w.t. This fact is of particular importance in comparing British with U.S.A. figures, since the former are usually given in g.r.t. and the latter in d.w.t. When an American speaks of 60 mn. tons of shipping, he is usually referring to the same quantity of shipping as the Englishman who speaks of 40 mn. tons.

15. Nowadays tonnage figures for fleets as a whole are usually expressed in g.r.t., though

CC-0. In Public Domain. Gurukul Kangri Collection, Haridwar

Digitized by Arya Samaj Foundation Chennai and eGangotri



older figures are often available only in n.r.t. The reader who has to use such figures should form the habit of examining at the outset the lower tonnage-limit to which they relate. Different sources furnish figures (*a*) of 100 g.r.t. and over, (*b*) of 500 g.r.t. and over, (*c*) of 1,600 g.r.t. and over, (*d*) of 2,500 g.r.t. and over, (*e*) of 3,500 g.r.t. and over, (*f*) of 5,000 d.w.t. and over. These variations are a great nuisance to the statistician, and often impair comparisons between data from different sources. A limit of 500 g.r.t. seems to have been adopted to exclude small coasting craft and non-trading vessels such as fishing vessels. The 1600 g.r.t. limit has apparently been adopted because this figure is used as a lower limit governing certain statutory requirements concerning the safety of life at sea. The limits of 2,500 g.r.t., 3,500 g.r.t. and 5,000 d.w.t. (the two latter being roughly equivalent) are attempted dividing lines between deep-sea-going and other tonnage.

16. This is a convenient point at which to refer to the distinctions which have to be drawn between the geographical areas of employment of British ships. "Coasting Trade" refers to traffic round the coast of the United Kingdom, including the Channel Islands, the Scilly Islands and the Isle of Man. The vessels engaged in this traffic are mostly below 2,000 g.r.t., but some (particularly in the London coal trade) are as large as 3,500 g.r.t. (about 5,000 d.w.t.).*

"Home Trade" refers to traffic between the U.K. and the north coast of Europe between the river Elbe and Brest. Again, the vessels engaged in this trade do not exceed about 3,500 g.r.t., though there are a few exceptions.

"Short Sea Trade" includes traffic with North Europe between the limits of Narvik and St. Jean de Luz, including the Baltic sea. Vessels engaged in this traffic are, on the whole, larger than those in the home trade and not so large as those voyaging outside Europe, but there is no clear line of tonnage demarcation. A tramp of 5,000 d.w.t. may visit the Baltic, North Germany, Spain, the North African coast and even North America, and may thus engage at different times in several trades.

Finally "deep-sea" trade includes those seas not covered by coasting, home-trade and short-sea. Sometimes the expression "ocean-going" occurs, but the same words have also been used to denote vessels proceeding outside coastal limits, which is apt to be confusing. There is no standardized terminology in these matters, and it would be very useful to have one.

17. A few actual tonnage figures at this stage may illustrate the kind of material with which the shipping statistician has to deal.

At the time of the Spanish Armada (1588) the total British and Colonial fleet consisted of about 470 vessels of some 37,400 *net* tons. This had increased to 2,620 vessels of 210,000 net tons by a century later (1688). By 1800 the fleet had increased to 17,410 vessels of 1,856,000 net tons; and by 1900 the U.K. fleet consisted of about 20,000 vessels of some 9 3 million net tons. *World* tonnage between 1800 and 1900 is estimated to have increased five-fold and it doubled itself again in the next 22 years, the transfer from wooden to iron ships no doubt facilitating the change. The phenomenal increase in trade in the nineteenth and early twentieth century is well illustrated in these figures.

18. The growth of world tonnage since 1905 and the diminishing proportion owned by the U.K. is shown in the following Table:

TABLE 1.—*U.K. and World Tonnage*

(Vessels of 100 g.r.t. and over. Steam and motor ships, excluding vessels on the Great Lakes of North America.)

| *Mid-year* | *U.K.* (g.r.t. 000) | *World.* (g.r.t. 000) | *U.K. as % of world* |
|---|---|---|---|
| 1905 | 14,497 | 28,743 | 50·4 |
| 1915 | 19,236 | 43,498 | 44·2 |
| 1925 | 19,305 | 60,103 | 32·1 |
| 1935 | 17,298 | 61,247 | 28·2 |
| 1945 (*a*) | 14,000 | 77,700 | 18·0 |
| 1947 | 16,120 | 81,256 | 19·8 |

(*a*) Approximate figures.

* Eire offers a special difficulty, and is treated sometimes as within coasting limits, sometimes as outside them.

CC-0. In Public Domain. Gurukul Kangri Collection, Haridwar

Digitized by Arya Samaj Foundation Chennai and eGangotri



The U.K. figures in this table exclude vessels chartered or on loan from other countries. The world tonnage in 1947 included a great deal of U.S.A. tonnage permanently laid up, so that the U.K. proportion of the active fleet was somewhat higher than 19·8 per cent.

*Classification by Type of Propulsion*

19. The days of sail have gone. With a few exceptions of no statistical significance all vessels, even on the coast, are driven by some kind of engine, and for our purposes may be classified into three groups—coal-fired steamers, oil-fired steamers and motor vessels. There are further points of classification which have an importance from the ship-builder's point of view (and, of course, to the individual owner), such as the distinction between reciprocating and turbine engines; but the main distinction for the purposes of shipping statistics is according to the type of fuel, coal or oil.

20. The proportion of oil-fired vessels has increased very substantially since 1914. The movement was checked by the shortage of oil after the second world war, but there seems no doubt that the proportion will continue to increase because of the reduced manning and engine spaces, and the increased speed and cleanliness due to oil bunkering. The following table indicates the proportions of the three types of propulsion, together with sail, in the fleets of the world as a whole, the proportions for the U.K. being very similar.

TABLE 2.—*Proportions of World Fleet of* 100 *g.r.t. and over* (a) *Coal Burning Steamers*, (b) *Oil-Burning Steamers*, (c) *Motor Vessels and* (d) *Sail. Based on figures from Lloyd's Register Statistical Tables*

| *Mid-year* | (*a*) *Coal-burning steamers* % | (*b*) *Oil-burning steamers* % | (*c*) *Motor vessels* % | (*d*) *Sail* % |
|---|---|---|---|---|
| 1914 | 88·84 | 2·65 | 0·45 | 8·06 |
| 1921 | 72·30 | 20·65 | 2·00 | 5·05 |
| 1930 | 57·57 | 28·53 | 11·63 | 2·27 |
| 1935 | 50·15 | 30·65 | 17·42 | 1·78 |
| 1939 | 44·67 | 29.63 | 24·36 | 1.34 |
| 1947 | 26.20 | 52·52 | 20·28 | 1·00 |

The surprisingly high proportion of oil-burning steamers in 1947 was a legacy of the war and may not be permanent.

*Types of Employment*

21. Merchant vessels are divisible into three classes, tankers (carrying liquid cargo in bulk such as crude oil, refined oil, molasses and palm oil); tramps (carrying mostly dry cargo in bulk) and liners (carrying dry cargo, usually in "parcels," and passengers). It is comparatively easy to distinguish tankers from the other classes (which are usually referred to as "dry cargo" vessels) and some official figures make the distinction. When we come to classify into tramps and liners, however, difficulties at once arise.

22. The broad distinction between liners and tramps is much the same as between a bus and a taxi. The liner runs on a fixed time-table between specified ports; she usually offers her services for the carriage of goods or passengers to all comers and, if cargo is not forthcoming to fill her to capacity, may sail light. The tramp, on the other hand, is usually chartered for a voyage to lift a specified bulk cargo which may be lying in any port in the world, though she may also be chartered for a certain fixed length of time or a series of voyages. She may leave the U.K. for a particular destination without any arrangements having been made for the next leg of her voyage. With the growth of radio communication the old system under which tramps visited foreign ports on the offchance of picking up a cargo has disappeared; but they are still liable to be sent all over the globe as the need for sea transport arises.

23. This has led to a certain amount of distinction between liner and tramp in type of construction, the liner on the whole being more specialized. But the difference between the modern tramp and the modern cargo liner is diminishing. The real distinction lies in the type of employment. At the present time liner companies have acquired a number of tramp-type vessels to tide them over the period of post-war shortage, which does not make the distinction any clearer.

CC-0. In Public Domain. Gurukul Kangri Collection, Haridwar

Digitized by Arya Samaj Foundation Chennai and eGangotri



24. Official figures and Lloyd's Register do not attempt to make any distinction between tramp and liner, although the Ministry of Transport during the war (and, I believe, at the present time) found it necessary to make certain classifications of this type. The procedure followed by the Chamber of Shipping is to classify ships according to the detailed knowledge which the Chamber possesses of the owning companies and the type of trade in which they engage. There is a border-line case, fortunately concerning relatively few ships, where a company may be running both a line and tramp shipping and may switch vessels from one to another. In such case it is extremely difficult to draw a distinction because a particular ship may, for example, leave this country on liner service and at some subsequent stage be transferred to tramping. The effect on total figures is not appreciable because there are comparatively few ships concerned, and normally the Chamber consults the owners in making an allocation.

25. It is often desirable to analyse the liners themselves into sub-groups according to whether passengers are carried or there is refrigerated space on board. There is only one statutory line of demarcation concerning passengers. Any vessel carrying more than 12 passengers requires a Ministry of Transport Certificate, and to that extent it is easy to distinguish pure cargo liners (i.e. those carrying 12 or fewer passengers) and the other vessels. Above the limit of 12, however, there is no clear point at which one can draw a line between passenger liners carrying cargo and cargo liners carrying passengers; according to the type of ship and the trade, practically all sizes of passenger lists may be found. Certain vessels, such as the "Queens," can be classified without difficulty as passenger liners, although even they carry a small amount of cargo. Between the pure cargo and the pure passenger liners there is a class which can only be described as mixed passenger-cargo.

The following Table 3 will give a general idea of the relative sizes of the fleets of various type. It is based on information supplied by the Ministry of Transport, who classify tramp-type ships as tramps, notwithstanding that they are on liner services and would be regarded for my purposes as liners. It is hoped that in the next year or so more detailed information of this character will be available.

TABLE 3.—*Vessels on the U.K. Register at December* 31, 1947 (500 *g.r.t. and over*) *classified by Type. Government-owned and returnable tonnage included*

| | *Number* | *G.R.T.* (000) |
|---|---|---|
| Passenger Liners | 121 | 870 |
| Passenger-cargo Liners | 248 | 2,007 |
| Cargo Liners | 829 | 4,527 |
| Tramps | 1,366 | 5,733 |
| Tankers | 529 | 3,402 |
| Total | 3,093 | 16,539 |

*Construction*

26. The rapid growth of the world's mercantile fleet over the last century and a half has already been mentioned. To complete the general picture of the fleet at the present time, something should be said of the birth-rate (construction of new ships) and the death-rate (sinkings and breaking-up). 1948 is a very unrepresentative year. There were enormous losses of merchant tonnage during the Second World War which have not yet entirely been made good; there is a shortage of most classes of shipping, leading to the retention in service of vessels which in more normal times might have been scrapped; building prices are very high, and are in many cases a deterrent to the placing of orders; shortage of steel and equipment are restricting the output of British yards; and, in short, the merchant fleet has neither returned to a pre-war level nor found a new post-war level under stable conditions.

27. In the inter-war period after 1921 sinkings and break-up retired about 3 per cent. of the world fleet annually. New construction in the world varied enormously according to the state of trade, being as low as 489,000 g.r.t. in 1933 and as high as 3,034,000 g.r.t. in 1938. In 1947 the launchings of the world totalled 2,112,000 g.r.t. Of this, 1,202,000 g.r.t. was launched in the U.K., about 822,000 g.r.t. for U.K. owners. Valuable quarterly statements of shipbuilding in all countries of the world are issued by Lloyd's Register.

CC-0. In Public Domain. Gurukul Kangri Collection, Haridwar

Digitized by Arya Samaj Foundation Chennai and eGangotri



*Ownership in the U.K.*

28. Before World War II the U.K. Merchant Fleet was commercially owned, with the exception of a few tankers owned by the Admiralty for the service of the Navy. The situation has changed to some extent owing to the circumstances of the war. The Government acquired the ownership of some British vessels during the war, though this was somewhat exceptional; in more cases the Government acquired foreign tonnage, and still more vessels were built by the Government for its own account, though these ships have nearly all been sold to commercial owners. In addition to these vessels, a number were temporarily acquired from abroad, mostly from the U.S.A. under Lease-Lend. The consequence was that at one stage the U.K. Government was a substantial shipowner, and it still retains a certain number of ships. The following Table 4 (which is subject to the same provisos as Table 3) gives a broad picture of the nature of the ownership of the U.K. fleet at the end of 1947. By that date nearly all the returnable tonnage had been returned except a number of Canadian and American tramp ships.

TABLE 4.—*Ownership of the U.K. Fleet* (500 *g.r.t. and over*) *at December* 31*st*, 1947. (000 *g.r.t.*)

| | *Privately owned* | *Owned by U.K. Government* | *Returnable tonnage* | *Total* |
|---|---|---|---|---|
| Liners | 6,989 | 393 | 22 | 7,404 |
| Tramps | 4,167 | 563 | 1,003 | 5,733 |
| Tankers | 2,963 | 439 | — | 3,402 |
| Totals | 14,119 | 1,395 | 1,025 | 16,539 |

29. In connection with ownership, a few words may be said about the nature of the organization of the commercial companies. Generally speaking, the liners are composed of fairly large units. In tankers, about 80 per cent. of the tonnage on the U.K. Register is owned and managed by subsidiaries of the oil companies. The remaining 20 per cent. is in the hands of the so-called "tramp-tanker" companies, some of which are entirely tanker and some of which own other tonnage. There is a wide divergence of practice in the tramp industry, some managements dealing with only one or two ships, others with 20 or more.

## EMPLOYMENT OF SHIPPING

30. Information about the U.K. fleet itself, though not perfect, is very complete. When we turn from what the ships *are* to what they *do* the position is less satisfactory. Forming a comprehensive picture of the employment of British shipping is like trying to piece together a gigantic jig-saw puzzle, in which none of the pieces fit and some are missing altogether.

31. Lloyd's Daily Index gives a current record of the positions of ships but it is not summarized. The Board of Trade is the principal source of published information on the employment of shipping. Some analyses appeared before the war in the Annual Census of Seamen. For 1936, 1937 and 1938 (and I understand that information is to be resumed for 1947) the Board published particulars of the cargo carried to and from the U.K. according to the nationality of the carrying vessel. There are also statistics published concerning the movement of passengers and tonnage entrances and clearances. All this is very valuable, but corresponding information for cross voyages is not available. There are, however, data provided by overseas countries in their trade and shipping returns, summaries published by the League of Nations, miscellaneous data collected or computed from time to time by the trade organizations, and so forth, which throw some light on the position.

*Statistics of Weight*

32. Before World War II perhaps 400–500 million tons of goods entered into international trade, of which about 80 per cent. by weight and value was sea-borne. Statistics of international trade by weight are, however, very scanty except in certain cases such as cereals, for which figures are published by the International Institute of Agriculture at Rome. The article on trade which

CC-0. In Public Domain. Gurukul Kangri Collection, Haridwar

Digitized by Arya Samaj Foundation Chennai and eGangotri



appears annually in the *Board of Trade Journal* and the Annual Report of the Liverpool Steam Ship Owners' Association gives some estimates of the weights of imports into and exports from the U.K., and these data, in conjunction with those concerning cargo by nationality of carrying tonnage enable some fairly close estimates to be made of the weight of British carryings *to and from the U.K.*

33. The unit of weight is neither very convenient for the measurement of volume of trade nor very expressive in view of the enormous differences in value per ton between manufactured articles and bulk commodities. The unit almost invariably used is that of value; but from the point of view of shipping carriage this is hardly sufficient because of the fluctuating nature of the unit itself. The Board of Trade attempts to correct for changes in the value of money by computing a "quantum" index of volume of U.K. trade, based on current quantities revalued at 1938 prices compared with overseas trade in that year; but this index has been criticized by shipowners as not measuring *volume* in the sense of weight of cargo.

34. Improvements are continually taking place in the design of shipping, and its adaptation to specialized trades. Not all of these changes involve an increase in the cargo capacity per g.r.t. or per n.r.t. of the ship—for example refrigerated accommodation requires a great deal of space which is occupied by the refrigerating plant itself. Nevertheless, on the whole, there have been appreciable increases in the carrying power of ships in the last 30 years, owing to improved construction, the substitution of oil for coal as fuel, and increased speed. Comparisons on the basis of gross or net tonnage over a period of years therefore do not accurately reflect the actual carrying capacity of that tonnage. It is, however, difficult to find reliable information which enables such comparisons to be made, and there is a very useful field of research here for an investigator who has the time to devote to it. The reports of the Liverpool Steam Ship Owners' Association referred to above provide some interesting figures based on the relation between net tonnage of entrances with cargo in the U.K. and weights of cargo imported, with similar figures for exports; but net tonnage does not necessarily correspond to cargoes carried—for instance the entrance figures include foreign passenger liners calling off Cowes to pick up mails.

*Tonnage and Clearance Figures*

35. Most maritime countries, and the U.K. in particular, publish figures based on the tonnages entered and cleared at their ports. These are almost invariably expressed in net registered tons, and are usually classified according to whether the vessels are of the nationality of the country concerned, or not. The use of a comparable unit internationally accepted makes these figures very useful.

36. The Board of Trade statistics draw a distinction between "arrivals and departures" of vessels at ports in the U.K., and "entrances and clearances." The primary object of this distinction is to avoid double counting in the case of vessels which take on cargo or discharge it at more than one port. Vessels calling, in the course of a single foreign voyage inward, at one or more ports in the U.K. before arriving at their final port of discharge, are recorded among the arrivals at each of those ports, but among the entrances at only one of them; and similarly outgoing vessels are recorded among departures from each port of call, but among the clearances at only one of them. Vessels engaged in the coasting trade arriving or departing from any U.K. port and there landing or embarking cargo and passengers are recorded at each such port with certain exceptions.

*Statistics of Value of Cargo*

37. I have referred above to the fact that in 1936, 1937 and 1938 U.K. statistics itemized the value of goods carried according to nationality of carrying vessels—a very valuable addition to our knowledge of shipping traffic, though confined to trade to and from the U.K. With these data and estimates based on overseas trade returns it is possible to give reasonably close figures (based on values) for traffic carried in British vessels throughout the world. A further source of information bearing on the same question is contained in the inquiries (referred to below) into the freight earnings of British vessels. The following table gives a general picture of the geographical distribution of British carrying trade and earnings as between the U.K., the remainder of the British Commonwealth and foreign countries:

CC-0. In Public Domain. Gurukul Kangri Collection, Haridwar

Digitized by Arya Samaj Foundation Chennai and eGangotri



TABLE 5.—*Geographical Distribution of British Carrying Trade and Earnings*

| | *Proportion by value of goods* | | *Proportion by value of gross freight (excluding passage money and coasting freight)* |
|---|---|---|---|
| | 1912 % | 1936 % | 1936 % |
| *Inter-Commonwealth* | | | |
| U.K.—Commonwealth | 23½ | 36 | 39·2 |
| Commonwealth—Commonwealth | 3½ | 5 | 4·0 |
| Total | 27 | 41 | 43·2 |
| *Commonwealth—Foreign* | | | |
| U.K.—Foreign | 40 | 29½ | 27·3 |
| Commonwealth—Foreign | 11½ | 15½ | 13·7 |
| Total | 51½ | 45 | 41·0 |
| Total Commonwealth trade | 78½ | 86 | 84·2 |
| Foreign—Foreign trade | 21½ | 14 | 15·8 |
| Total | 100 | 100 | 100·0 |

It has been possible in this article to deal only with this subject in the broadest outline. For more detailed discussions reference should be made to the papers by Macrosty (1926), Isserlis (1938) and Leak (1939) in the *Journal of the Royal Statistical Society*. It is possible that post-war systems of control may provide some further information under this head.

*Passenger Traffic*

38. Statistics of the passenger movements to and from the U.K. are collected by the Board of Trade and published in that Department's Journal. The published figures are divided into inward and outward movements, showing British subjects separately from aliens, and also showing the countries in which the passengers embarked or contracted to land. Pleasure cruises are distinguished, and separate tables are also given for emigrants and immigrants of British nationality. The figures relate solely to numbers of individuals, and are not accompanied by estimates of passenger fares or information about the vessel in which the passengers travel. The trade returns of other countries give some similar information concerning passenger movements, but there does not seem to have been in recent years a systematic study of passenger-carrying traffic of the U.K. Fleet throughout the world.

## FINANCIAL AND ECONOMIC STATISTICS

39. The tangible assets of the shipping companies consist almost entirely of ships. There is a certain amount of capital invested in buildings and office equipment (abroad as well as at home), and some companies have, directly or by controlling interests in subsidiaries, ancillary enterprises such as stevedoring and even hotels. The intangible assets such as goodwill in liner trades are also considerable. But for the purposes of considering the capital structure of the industry as a whole we may take it that ships themselves constitute the real assets. It was estimated that before World War II the building cost of the U.K. fleet in existence at that time was about £600 mn. At the present time (1948) it is probably about £900 mn., though this figure in no way corresponds to *replacement* values for the whole fleet, which would be much higher.

40. The gross earnings of U.K. shipping in 1936 were about £145 mn., but there were violent fluctuations from year to year in the inter-war period. There are as yet no figures for a post-war year, though some estimates may be possible from inquiries conducted into the shipping contribution to the balance of trade. Figures for net earnings are unknown even for the pre-war period, but must have been much lower than the gross earnings—disbursements abroad alone were about 40 per cent. of the gross earnings in 1936.

CC-0. In Public Domain. Gurukul Kangri Collection, Haridwar

Digitized by Arya Samaj Foundation Chennai and eGangotri



41. The above figures are rough estimates based on our knowledge of tonnage and contributions to the balance of payments with overseas countries. The only other source of information about the financial position of the U.K. fleet is the balance sheets of individual companies, which are easily misinterpreted. The shipping journal *Fairplay* publishes summaries covering a proportion (not a very large proportion) of the fleet which provides a useful guide to movements from one year to another. In considering figures of this kind it is important to remember that the paid-up share capital of a shipping company does not necessarily bear any relation to the value of the company's assets. Many companies in the past have been built up by ploughing back the profits into the business, with the result that the fleet far exceeds in value the paid-up capital. A good deal of the assets of a company consists of depreciation reserves which are built up for the replacement of ships reaching the end of their useful life; and, of course, during the war when there were heavy losses and very few replacements the reserves accumulated on an unprecedented scale. It is to be expected that most of this money will have to be spent on new ships at high cost within the next few years.

*Building Costs*

42. There has been in the past, and will continue to be in the future, a considerable demand for an Index of Building Costs in the Shipping Industry. This is an exceedingly difficult index to construct. Ships are altering in construction from year to year, and new discoveries and new requirements (such as radio aids to navigation, improved living quarters for the crew and the development of refrigeration) involve a progressive change in the nature of a "new ship." From the shipbuilders' point of view this means that any index number based on actual prices of ships is inaccurate because like is not being compared with like. On the other hand, from the shipowners' point of view the material figure is what he has to invest in the way of capital to carry a deadweight ton of cargo, or a passenger, so that an index based on actual costs measures his capital requirements, even if it does not relate to an identical type of ship. Like many questions associated with the measurement of price changes, the appropriate figure depends on the use to which it is put.

43. The Board of Trade index of wholesale prices gives a general guide to movements in cost. There is not an accepted index number of building costs for shipping alone, but *Fairplay* has for some years been in the habit of publishing the price of a *standard* tramp vessel. Table 6 is based on these figures, but I must repeat that so far as the shipowner is concerned this index underestimates the price which he has to pay for his ship because of changes in the nature of the product.

TABLE 6.—*Building price of a* 9,500 *d.w.t. Motor Cargo Ship*

| | £ *per ton d.w.t.* | *Percentage of August*, 1939 |
|---|---|---|
| August, 1939 . . . | 15·25 | 100 |
| December 31st, 1945 . . | 28.0 | 184 |
| June 30th, 1946 . . . | 30·5 | 200 |
| December 31st, 1946 . . | 31·5 | 207 |
| June 30th, 1947 . . . | 34·75 | 228 |
| December 31st, 1947 . . | 37·00 | 243 |

44. A pitfall in the interpretation of such figures should be mentioned. As the building price before the war varied very considerably from one year to another, comparisons with prices "before the war" are very much influenced by the precise year which is taken as the basis of comparison. For example, prices between 1936 and 1939 increased by about 40 per cent., so that to say that prices in 1948 are 2½ times those existing in 1939 is equivalent to saying that they are over three times those in 1936.

It must also be remembered that price increases for the post-war period as compared with pre-war vary very much according to the type of ship under construction. Owing to the greater proportion of specialized equipment required in liners it is probable that the increases are greater in that section than suggested by Table 6; and the prices for small ships have also increased more than proportionately.

CC-0. In Public Domain. Gurukul Kangri Collection, Haridwar

Digitized by Arya Samaj Foundation Chennai and eGangotri



*Index Numbers of Freights*

45. Freight index numbers were published before World War II by *Lloyd's List*, *The Economist* and the *Manchester Guardian*. The standard work on freight indices for tramp shipping is a paper by Dr. Isserlis, read before the Royal Statistical Society in 1937. Isserlis gave chain indices for the years 1869–1936 inclusive, described an Index prepared by the Chamber of Shipping from 1920 to 1937 (and published in *The Statist*), and gave an account of an improved index weighted according to trade carried by British Tramps in 1935, which he introduced on the basis of 1935 = 100. The war brought this index to an end, and it has not yet been resumed, although consideration is being given at the Chamber to a resumption in the fairly near future. These index numbers relate to tramps; there are no comparable figures for tankers or liners. Generally speaking, however, liner freights are known to follow the course of tramp freights, though not fluctuating so violently, and the tramp index appears to provide a reasonable measure of movements in shipping freights as a whole.

*Contributions to Invisible Exports*

46. U.K. shipping provides a most valuable contribution to our invisible exports, and is also a very substantial saver of invisible imports. Before the war estimates were made by the Board of Trade of the contribution to the balance of trade, but owing to the fact that imports were valued c.i.f. and exports f.o.b., the figure given by the B.o.T. included a very large amount payable by U.K. nationals to other U.K. nationals in the form of freight on imports. Since the war, however, in estimates of the U.K. balance of payments both imports and exports have been valued f.o.b., freight on imports in U.K. vessels being omitted from the account altogether and freight on imports in foreign vessels appearing as part of the shipping payments item. Thus before the war the contribution measured both invisible exports and savings in invisible imports, whereas now it relates only to the former.

47. Very valuable supplementary information was provided by the shipping industry in respect of the years 1931 and 1936 by two voluntary inquiries undertaken at the request of the Board of Trade. A full account is given in the paper by Dr. Isserlis, referred to previously. The following Tables 7 and 8 illustrate the shipping services account for 1936.

TABLE 7.—*Shipping Services Account (including foreign ships) for the U.K. in* 1936

| *Expenditure* | £ *mn.* | *Income* | £ *mn.* |
|---|---|---|---|
| Freight on imports in foreign vessels* | 20·0 | Freight on exports in U.K. ships | 25·6 |
| Port expenditure of U.K. ships in foreign ports | 56·0 | Freight on cross voyages | 41·7 |
| Passenger fares by U.K. nationals in foreign ships* | 2·0 | Port expenditure of foreign vessels in U.K. ports* | 9·5 |
| Balance | 11·5 | Fares by non-nationals in U.K. ships | 12·7 |
| | 89·5 | | 89·5 |

* Figures indicated by an asterisk are tentative estimates, the shipping inquiries not providing any information for these items. They are improved versions of earlier figures given by me in *J. R. Stat. Soc.*, 110, 181.

TABLE 8.—*Account for Shipping Services of the U.K. Fleet in* 1936. (*Some figures tentative*)

| *Expenditure* | £ *mn.* | *Income* | £ mn. |
|---|---|---|---|
| Port expenditure of U.K. ships in foreign ports | 56·0 | Freight on exports in U.K. ships | 25·6 |
| Balance | 24·0 | Freight on cross voyages | 41·7 |
| | | Fares by non-nationals in British ships | 12·7 |
| | 80·0 | | 80·0 |

There are four different figures which can be quoted as the contribution of shipping to the invisible balance, and a good deal of confusion has arisen from these variations:

CC-0. In Public Domain. Gurukul Kangri Collection, Haridwar

Digitized by Arya Samaj Foundation Chennai and eGangotri



(*a*) in 1936 the "net shipping income" on the basis then used was £85 mn.; this included payments by U.K. nationals to U.K. nationals in respect of U.K. imports.

(*b*) In the same year foreign ships incurred a net payment of £10 mn. to the U.K. as disbursements in U.K. ports, and consequently the contribution of U.K. shipping as a whole to the invisible balance was £75 mn.; this also includes payments between U.K. nationals.

(*c*) In 1936, as shown in Table 7, the net earnings on the Shipping services account was £11 5 mn., and this is the amount in foreign exchange which was contributed by shipping (British and foreign) to the exchange balance.

(*d*) This figure, however, does not measure the amount of foreign exchange contributed by U.K. shipping, this being reduced by a net expenditure on foreign ships. The earnings of U.K. shipping in foreign exchange in 1936 was £24 mn., as shown in Table 8.

48. Estimates for the post-war period are given in the Government's periodic White Papers on the economic situation, but are necessarily somewhat tentative. The shipping industry undertook in 1948 to conduct a further inquiry in respect of the calendar year 1947 in order to enable such estimates to be put on a much firmer statistical basis, and a summary of the results will doubtless be published in due course.

*Employment of Seamen*

49. Finally, reference should be made to the annual census of seamen conducted by the Board of Trade. This was quinquennial up to 1927 (the first census being taken in 1891) and annual thereafter, the results being separately published by the Stationery Office. It has not yet been resumed after the second World War. The term "seaman" includes any person who appears on the crew list, whatever the nationality. Classifications are carried out—

(*a*) by age;
(*b*) as between British white, foreign white and native seamen;
(*c*) as between coasting and home trade and foreign trade;
(*d*) according to size of vessel;
(*e*) by trade areas; and
(*f*) between deck department, engine room department and stewards' department;
(*g*) between officers and other ratings.

Some of these figures are also itemized between steam vessels and motor vessels, but there is no classification according to type, except for seagoing passenger vessels. On June 15, 1938, the total number of seamen engaged on vessels registered in the U.K. was 159,000, of which 140,000 were engaged in foreign trade. The number employed on any given date, and in particular on the census date, does not in normal times represent the total number of men who are employed on a vessel at some time or other during the year. The census figures therefore show only those seamen who were employed on employed ships on the specified day, and not the number who follow the sea service. In 1938 the total number of the latter was about 192,000.

*Bibliography*

The following references will form a starting-point for further reading. They themselves contain a number of references to previous work. The student may also consult periodicals such as *Fairplay*, the *Motor Ship*, the *Board of Trade Journal*, the Trade and Navigation Accounts, the reports of the Chamber of Shipping and the Liverpool Steam Ship Owners' Association, and a valuable series of reports of the Imperial Shipping Committee. There is much of interest about the past in Mulhall's *Dictionary of Statistics* and the article on "Shipping Statistics" in the *Encyclopedia Britannica*.

*Board of Trade Departmental Committee on Shipping and Shipbuilding* (Cmd. 9092). H.M. Stationery Office.
Fayle, C. E. (1927), *The War and the Shipping Industry*. Oxford University Press.
Isserlis, L. (1938), "Tramp Shipping, Cargoes and Freights," *J.R.S.S.*, **101**, 53.
Kendall, M. G. (1947), "The Reconstruction of the British Mercantile Marine," *London and Cambridge Economic Service*. July.
Leak, H., and Priday, T. (1933), "Migration from and to the United Kingdom," *J.R.S.S.*, **96**, 183.
Leak, H. (1939), "The carrying trade of British Shipping," *J.R.S.S.*, **102**, 213.
Lindsay, W. S. (1874–6), *History of Merchant Shipping and Ancient Commerce*. 4 vols.
Macrosty, H. W. (1926), "Statistics of British Shipping," *J.R.S.S.*, **89**, 452.
Salter, J. A. (1921), *Allied Shipping Control*. Oxford University Press.

CC-0. In Public Domain. Gurukul Kangri Collection, Haridwar

Digitized by Arya Samaj Foundation Chennai and eGangotri



# MISCELLANEA

## Working Class Clothing Consumption, 1937–1938

By Mrs. K. H. Ross, B.A.*

### *Introduction*

This paper shows the results of an enquiry into pre-war working-class consumption of clothing. It is based mainly on data collected by the Ministry of Labour and made available to the Board of Trade for investigation, although reference is made to some other results. There is, firstly, a description of the data available; secondly, a note on dollar expenditure; thirdly, an analysis of clothing consumption; fourthly, a discussion of prices paid; and finally, a comparison of some figures for two other countries with those for the United Kingdom. Throughout, expenditure is used to denote money expenditure, and consumption to denote the textile content of clothing bought.

Only a section of the Ministry of Labour data has been analysed, and the accuracy of the results is, therefore, lower than it would be with a full analysis. It has not been considered worth while to undertake large-scale statistical testing, and the results should, therefore, be considered as qualitative rather than quantitative.

In many cases the results merely confirm certain assumptions about clothing habits which are either well known in theory or obvious when stated. In spite of this I feel it is worth while giving them, as factual evidence is always useful. There are, too, a number of aspects of these figures which have not been considered, and this first analysis of the data may suggest fields for research.

### *Data Available*

In 1937–38 the Ministry of Labour carried out an enquiry into working-class expenditure. A full description of methods of sampling and a summary of results for industrial families is given in the *Ministry of Labour Gazette* for December, 1940, and results for agricultural families are given in the *Gazette* for January, 1941. Over 10,000 families supplied details of expenditure for a complete week, four times in the year. Ministry of Labour expenditure figures are based on the averages for the four weeks to eliminate seasonal variations. Of the total, 2,225 families also supplied details of expenditure on clothing for the other 48 weeks of the year (some supplied for a few less than this). It was a sample of these last that was analysed.

352 families were picked, in general the first few for each region. Completely random sampling would have caused too much disturbance to the Ministry's filing, but details for the 352 compare fairly closely with those of the 2,225, as is shown in Note 1. For the same reason, only information for weeks other than the four complete budget weeks was available. Only families which supplied 47 or 48 returns were considered, and yearly rates of consumption were calculated from weekly rates given by these. Two sources of error arise. Firstly it is possible that those families returning for 47 weeks only failed to return the other because nothing was bought in that week. As only one-third of the total did not return all weeks this would cause an error of less than 1 per cent. Secondly, there is a tendency for the average expenditure in the four budget weeks to be higher than that for the whole year (*Ministry of Labour Gazette*, December, 1940). Their omission will cause estimates to be low, again with an error of the order of 1 per cent.

Information available, for each family considered, included:

(i) *Composition of the family.*—This was an average of the composition at each of the four

* This paper is the result of work done for the Board of Trade, but neither the Board of Trade nor the Ministry of Labour has any responsibility for the contents.

CC-0. In Public Domain. Gurukul Kangri Collection, Haridwar

Digitized by Arya Samaj Foundation Chennai and eGangotri



budget weeks, and was given in terms of Males over 18, Females over 18, Males 14–18, Females 14–18, and Children under 14. As clothing was only described as Men's, Women's and Children's it was necessary to allocate the 14's–18's. This could be done with confidence in a number of cases when, for instance, there was no expenditure for children's clothing, or when there was expenditure for children's clothing but no children under 14. In other cases they were allocated more arbitrarily according to the division of the family's expenditure on clothing between men, women and children. To a certain extent it was, therefore, necessary to assume part of what one was trying to find out, i.e. expenditure per head on clothing, but the effect will be very small as far as adults' expenditure is concerned, and not large as regards children's. The net result of the allocation, family by family, was that 60 per cent. of the 14's–18's were classified as adults and 40 per cent. as children. Another difficulty arose over newborn children. Occasionally only ¼ or ½ of a child was recorded. In calculating expenditure on clothing per child, such fractions were counted as complete children because of forward buying. Other fractions arising from members entering and leaving the family during the year have been counted as fractions.

(ii) *Average weekly expenditure of the family.*—It is unfortunate that income of the family could not be recorded, but it was felt that no reliance could be based on replies even if such a question were asked. It has, therefore, only been possible to consider families in terms of total expenditure and expenditure per head. Total expenditure is, itself, not a true record, as it is known that expenditure on tobacco and alcohol was underestimated. This means that probably a large majority of the families are classified rather lower than they should be. In the absence of any evidence it is necessary to ignore this factor (which is equivalent to assuming that it has an equal proportional effect on all families).

The difference between income and expenditure will be greatest when an unusually expensive item is bought during a budget week. This does not arise over clothing, as the total weekly expenditure was adjusted by the Ministry of Labour by substituting average clothing expenditure based on the year's returns for that recorded in the four budget weeks. It would arise, however, over such items as furniture, or a bicycle. Because of this factor all families spending an average of over £7 a week were excluded from the analysis. Families spending less than £2 a week were excluded as there may have been special circumstances to account for the relatively low expenditure. This means that the 352 considered were, in fact, a sample of 2,001 budgets.

Figures for the average composition and average expenditure of families in different expenditure groups are given in Table I. As might be expected, the average number of adults increases and that of children decreases as expenditure increases. This is because the more adults there are, the more wage earners there are, and consequently there is more money to spend. Also, in general, wages increase with age, and those with young children will tend to be younger couples with lower incomes.

As an expenditure group might include anything from single men families to families with 4 or 5 children, another breakdown was made according to expenditure per head, on the assumption that such groups would be more homogeneous. Figures for this breakdown are given in Table II.

(iii) *Total expenditure on clothing during the year (for 51 or 52 weeks) in terms of men's, women's and children's clothing.*—These figures were used to divide the families according to expenditure per man on men's clothing; expenditure per woman on women's clothing; and expenditure per child on child's clothing. This division was made primarily to discover the relation of amount spent on clothing to types of garment bought, and prices paid per garment. An anomaly arose because in some cases expenditure on children's clothing was recorded although there was no one in the family under 18. Such expenditure, although included in any figures for total expenditure on clothing, had to be excluded from this last breakdown. Figures for this breakdown are given in Table VI.

(iv) Besides the information given above, which was available from Ministry of Labour summaries, details of clothing expenditure for 47 or 48 weeks were available in terms of actual garments bought and amounts paid. Both made-up garments and material for garments were included. In the analysis, which was made from the point of view of textile content, only clothes with textile content were used; boots and shoes, rubber garments (such as aprons), buttons, elastic, and narrow fabrics, such as ribbon or shoe-laces, as well as costs of repairs, were omitted.

CC-0. In Public Domain. Gurukul Kangri Collection, Haridwar

Digitized by Arya Samaj Foundation Chennai and eGangotri



*Expenditure on Clothing*

The following tables show the expenditure on clothing of the families in the sample, the families being grouped according to total expenditure per week, and total expenditure per head per week:

TABLE I

| Total expenditure of family per week | 40–60*s.* | 60–80*s.* | 80–100*s.* | 100–120*s.* | 120–140*s.* | All |
|---|---|---|---|---|---|---|
| Number of families | 73 | 103 | 89 | 46 | 41 | 352 |
| Average weekly expenditure in pence | 615 | 835 | 1,068 | 1,298 | 1,547 | 992 |
| Average number of men | 0·99 | 1·22 | 1·44 | 1·44 | 1·87 | 1·33 |
| ,, ,, women | 1·06 | 1·18 | 1·32 | 1·63 | 1·75 | 1·32 |
| ,, ,, children | 1·27 | 1·34 | 0·90 | 1·23 | 0·95 | 1·15 |
| Average expenditure per week in pence: | | | | | | |
| On men's clothing | 11·6 | 20·5 | 30·6 | 34·9 | 50·4 | 26·6 |
| ,, women's clothing | 14·4 | 19·7 | 27·8 | 40·3 | 53·9 | 27·3 |
| ,, children's clothing | 7·4 | 10·6 | 12·2 | 14·2 | 17·8 | 11·7 |
| On all clothing | 33·4 | 50·8 | 70·6 | 89·4 | 122·1 | 65·6 |
| Expenditure per person on clothing in pence: | | | | | | |
| Men's | 11·7 | 16·8 | 21·3 | 24·2 | 27·0 | 20·0 |
| Women's | 13·6 | 16·7 | 21·1 | 24·8 | 30·8 | 20·7 |
| Children's | 5·8 | 7·9 | 13·6 | 11·6 | 18·7 | 10·1 |
| Clothing expenditure as per cent. of total | 5·4% | 6·1% | 6·6% | 6·9% | 7·9% | 6·6% |

TABLE II

| Expenditure of family per head per week | 0–10*s.* | 10–20*s.* | 20–30*s.* | 30–40*s.* | 40–50*s.* | 50–60*s.* | 60–70*s.* |
|---|---|---|---|---|---|---|---|
| Number of families | 21 | 98 | 134 | 59 | 25 | 10 | 5 |
| Average weekly expenditure in pence | 703 | 875 | 1,023 | 1,079 | 1,144 | 1,230 | 1,382 |
| Average number of men | 1·32 | 1·47 | 1·44 | 1·15 | 1·13 | 0·6 | 0·8 |
| ,, ,, women | 1·36 | 1·34 | 1·36 | 1·33 | 1·00 | 1·28 | 1·00 |
| ,, ,, children | 4·17 | 2·08 | 0·72 | 0·24 | 0·19 | 0 | 0 |
| Average expenditure per week in pence: | | | | | | | |
| On men's clothing | 8·5 | 20·1 | 33·1 | 27·9 | 30·4 | 15·1 | 42·1 |
| ,, women's clothing | 7·2 | 16·5 | 29·1 | 41·2 | 30·1 | 53·2 | 45·5 |
| ,, children's clothing | 16·0 | 17·1 | 11·6 | 6·3 | 7·1 | 0·4 | 0·6 |
| On all clothing | 31·7 | 53·7 | 73·8 | 75·4 | 67·6 | 68·7 | 88·2 |
| Expenditure per person on clothing in pence: | | | | | | | |
| Men's | 6·4 | 13·7 | 23·0 | 24·2 | 26·2 | 25·2 | 52·5 |
| Women's | 4·6 | 12·6 | 21·2 | 30·5 | 29·1 | 41·5 | 36·0 |
| Children's | 3·8 | 8·3 | 13·9 | 26·3 | 37·4 | — | — |
| Clothing expenditure as percentage of total | 4·5% | 6·1% | 7·2% | 7·0% | 5·9% | 5·6% | 6·4% |



CC-0. In Public Domain. Gurukul Kangri Collection, Haridwar

Digitized by Arya Samaj Foundation Chennai and eGangotri



It can be seen that, for the lower groups, clothing expenditure increases relatively more than total expenditure as the latter increases, and that expenditure on children's clothing increases relatively more than expenditure on adults' clothing. This increase in expenditure on children's clothing is particularly marked in the second breakdown. This is to be expected, as the lower groups are those with large families of children, and the expenditure per child appears to be negatively correlated with the number of children. (The correlation coefficient has not been calculated, but Table VI shows a marked tendency in this direction.)

The Ministry of Labour have themselves analysed the 2,225 budgets in terms of expenditure, dividing them according to recorded total weekly expenditure of the household. Such a breakdown has all the reservations mentioned earlier attached to it, but is by no means entirely invalid. The sample is representative of insured workers in the United Kingdom, that is, all manual workers, and all non-manual workers earning less than £250 p.a. P. Massey (1942) has carried out a similar enquiry into British "middle class" households, in which, however, the families are divided according to income of the head of the household.

I used these in an attempt to relate the clothing expenditure of the "working" and "middle classes" to that of the whole population. Details of the method of estimation are given in Note II. The following table summarizes the results:

TABLE III

| | *Percentage of population represented* | *Percentage of total expenditure represented* | *Percentage of total clothing expenditure represented* |
|---|---|---|---|
| "Working-class" households | 66 | 45 | 34 |
| "Middle class" | 16 | 25 | 21 |
| Others | 18 | 30 | 45 |
| Total for United Kingdom | 100 | 100 | 100 |

"Others" included (see Note II), besides those earning over £1,000 p.a., some groups not insured such as unemployed on assistance, old age pensioners not living in a family, etc. These figures show that the "working class" were responsible for an even smaller percentage of total clothing expenditure than of total expenditure on all items. This would suggest that a redistribution of income from the highest to the lowest groups would reduce the total expenditure on clothing. As, however, clothing expenditure, particularly of the top groups, will include payments for such items as exclusive design, service, etc., it is necessary to look at consumption figures to see the effect of such a redistribution on actual textile consumption.

*Consumption of Clothing*

Consumption of clothing was calculated on the basis of a notional "coupon" for cloth or yarn content. Figures were based either on estimates of the yardage of wool and non-wool material in an average-sized garment of a given type (a yard of wool cloth being 54 in. wide and counting as 4½ "coupons," while a yard of non-wool cloth was 36 in. wide and counted as 2 "coupons"), or in the case of hosiery, on the actual or an average coupon value in 1946. In the cases where a garment might be wool or non-wool (as opposed to one which included both or was necessarily one or the other) estimates were made of the percentage of the total garments which were wool or non-wool, and each garment was divided in this proportion between the two. This means that although when summed over a number of families the average cloth content of consumption is correct, the actual "coupon" consumption of a given family is open to doubt, and family to family variation within a group is difficult to estimate. Figures arrived at for "coupon" value are given in Note III. It must be emphasized that although these estimates were arrived at in consultation with appropriate production branches of the Board of Trade, they are my estimates and not theirs.

Total consumption of wool cloth, non-wool cloth, and hosiery by men, women and children was calculated for the various groupings of families and are given in Tables IV, V and VI.

CC-0. In Public Domain. Gurukul Kangri Collection, Haridwar

Digitized by Arya Samaj Foundation Chennai and eGangotri



## Table IV

*Annual Consumption of Clothing in terms of "Coupons"*

| Total expenditure of family/week | 40–60*s.* | 60–80*s.* | 80–100*s.* | 100–120*s.* | 120–140*s.* | All |
|---|---|---|---|---|---|---|
| "Coupons"/man: | | | | | | |
| Wool cloth | 15·0 | 19·0 | 20·5 | 23·1 | 25·6 | 19·9 |
| Non-wool cloth | 19·5 | 25·4 | 26·0 | 30·4 | 31·2 | 26·3 |
| Hosiery | 15·5 | 17·7 | 16·9 | 21·6 | 21·8 | 18·4 |
| Total | 50·0 | 62·1 | 63·4 | 75·1 | 78·6 | 64·6 |
| "Coupons"/woman: | | | | | | |
| Wool-cloth | 10·1 | 14·5 | 15·2 | 22·2 | 23·8 | 16·6 |
| Non-wool cloth | 19·7 | 26·4 | 27·8 | 34·2 | 36·3 | 28·4 |
| Hosiery | 20·6 | 24·4 | 23·8 | 30·7 | 32·1 | 25·8 |
| Total | 50·4 | 65·3 | 66·8 | 87·1 | 92·2 | 70·8 |
| "Coupons"/child: | | | | | | |
| Wool cloth | 11·8 | 13·9 | 20·0 | 15·2 | 21·4 | 15·5 |
| Non-wool cloth | 10·3 | 15·3 | 19·1 | 19·0 | 19·1 | 15·7 |
| Hosiery | 11·8 | 15·0 | 17·7 | 14·2 | 22·3 | 14·5 |
| Total | 33·9 | 44·2 | 56·8 | 48·4 | 62·8 | 46·6 |
| "Coupons"/family: | | | | | | |
| Wool cloth | 40·8 | 58·9 | 67·4 | 88·2 | 103·5 | 66·3 |
| Non-wool cloth | 53·6 | 82·4 | 91·2 | 122·7 | 140·3 | 90·7 |
| Hosiery | 52·4 | 70·3 | 71·7 | 98·5 | 118·2 | 76·2 |
| Total | 146·8 | 211·6 | 230·3 | 309·4 | 362·0 | 233·2 |

## Table V

*Annual Consumption of Clothing in Terms of "Coupons"*

| Expenditure per head per week of family | 0–10*s.* | 10–20*s.* | 20–30*s.* | 30–40*s.* | 40–50*s.* | 50–60*s.* | 60–70*s.* |
|---|---|---|---|---|---|---|---|
| "Coupons"/man: | | | | | | | |
| Wool cloth | 9·9 | 17·0 | 22·3 | 22·2 | 20·8 | 19·8 | 28·1 |
| Non-wool cloth | 10·0 | 21·7 | 29·9 | 28·0 | 34·7 | 30·8 | 36·0 |
| Hosiery | 10·7 | 15·8 | 19·9 | 17·8 | 26·7 | 30·4 | 35·0 |
| Total | 30·6 | 54·5 | 72·1 | 68·0 | 82·2 | 81·0 | 99·1 |
| "Coupons"/woman: | | | | | | | |
| Wool cloth | 4·3 | 11·4 | 16·8 | 23·9 | 18·5 | 31·7 | 56·1 |
| Non-wool cloth | 11·6 | 24·7 | 27·9 | 35·9 | 37·4 | 47·2 | 32·6 |
| Hosiery | 17·2 | 17·7 | 23·3 | 34·4 | 38·8 | 47·2 | 39·7 |
| Total | 33·1 | 53·8 | 68·0 | 94·2 | 94·7 | 126·1 | 128·4 |
| "Coupons"/children: | | | | | | | |
| Wool cloth | 9·1 | 14·5 | 20·0 | 28·2 | 42·8 | .. | .. |
| Non-wool cloth | 7·7 | 14·5 | 21·6 | 24·7 | 53·6 | .. | .. |
| Hosiery | 9·4 | 14·4 | 20·2 | 27·8 | 30·6 | .. | .. |
| Total | 26·2 | 43·4 | 61·8 | 80·6 | 127·0 | .. | .. |
| "Coupons"/family: | | | | | | | |
| Wool cloth | 55·6 | 70·7 | 69·3 | 63·9 | 50·1 | 54·0 | 78·5 |
| Non-wool cloth | 60·2 | 95·2 | 96·5 | 85·6 | 86·4 | 80·7 | 64·1 |
| Hosiery | 75·1 | 81·3 | 74·8 | 55·7 | 74·1 | 78·4 | 68·8 |
| Total | 190·9 | 247·2 | 240·6 | 205·1 | 210·8 | 213·1 | 211·4 |

N.B.—There are no figures for children in groups 50–60*s.* and 60–70*s.* per head per week, as all families spending over 140*s.* were excluded, and hence all families including a child (making 3 members) spending 50 or more shillings a week were automatically excluded. Compare the number of children shown in Table II.

CC-0. In Public Domain. Gurukul Kangri Collection, Haridwar

Digitized by Arya Samaj Foundation Chennai and eGangotri



TABLE VI

| | | | | | | | |
|---|---|---|---|---|---|---|---|
| (*a*) Expenditure/man on clothing | £0–2 | £2–4 | £4–6 | £6–8 | £8–10 | £10–14 | Over £14 |
| Number of families | 88 | 85 | 74 | 48 | 31 | 10 | 2 |
| Average number men/family | 1·24 | 1·45 | 1·58 | 1·33 | 1·40 | 1·00 | 1·00 |
| Average expenditure/man on clothing | £ *s. d.* 1 2 2 | £ *s. d.* 2 19 2 | £ *s. d.* 5 1 6 | £ *s. d.* 6 18 7 | £ *s. d.* 8 15 7 | £ *s. d.* 11 14 10 | £ *s. d.* 20 10 0 |
| "Coupons"/man: | | | | | | | |
| Wool cloth | 11·9 | 14·7 | 25·0 | 31·7 | 36·9 | 34·8 | 50·9 |
| Non-wool cloth | 12·0 | 21·8 | 31·9 | 36·5 | 40·1 | 59·9 | 35·6 |
| Hosiery | 13·8 | 16·6 | 17·9 | 20·8 | 30·9 | 36·3 | 24·9 |
| Total | 37·7 | 53·1 | 74·8 | 89·0 | 107·9 | 131·0 | 111·4 |
| (*b*) Expenditure/woman on clothing | £0–2 | £2–4 | £4–6 | £6–8 | £8–10 | £10–14 | Over £14 |
| Number of families | 96 | 93 | 62 | 50 | 28 | 13 | 8 |
| Average number women/family | 1·29 | 1·34 | 1·33 | 1·32 | 1·40 | 1·33 | 1·25 |
| Average expenditure/woman on clothing | £ *s. d.* 1 0 2 | £ *s. d.* 3 0 5 | £ *s. d.* 4 17 11 | £ *s. d.* 7 8 2 | £ *s. d.* 8 15 5 | £ *s. d.* 11 7 9 | £ *s. d.* 12 12 7 |
| "Coupons"/woman: | | | | | | | |
| Wool cloth | 3·2 | 11·9 | 20·6 | 26·9 | 26·8 | 47·9 | 48·3 |
| Non-wool cloth | 10·7 | 25·0 | 34·1 | 40·4 | 42·9 | 56·7 | 60·5 |
| Hosiery | 12·7 | 22·8 | 28·2 | 39·7 | 33·3 | 56·0 | 44·9 |
| Total | 26·6 | 59·7 | 82·9 | 107·0 | 103·0 | 160·6 | 153·7 |

| | | | | | | |
|---|---|---|---|---|---|---|
| (*c*) Expenditure/child on clothing | £0–2 | £2–4 | £4–6 | £6–10 | £10–14 | Over £14 |
| Number of families | 98 | 68 | 28 | 6 | 5 | 0 |
| Average number of children/family | 2·56 | 1·59 | 1·26 | 1·00 | 1·30 | .. |
| Average expenditure/child | £ *s. d.* 1 2 2 | £ *s. d.* 2 15 0 | £ *s. d.* 4 16 3 | £ *s. d.* 8 7 0 | £ *s. d.* 12 17 7 | .. |
| "Coupons"/child: | | | | | | |
| Wool cloth | 10·2 | 20·1 | 24·9 | 44·5 | 44·7 | .. |
| Non-wool cloth | 9·8 | 17·7 | 19·0 | 37·0 | 40·9 | .. |
| Hosiery | 10·7 | 19·2 | 26·9 | 45·5 | 22·5 | .. |
| Total | 30·7 | 57·0 | 70·8 | 120·0 | 108·1 | .. |

The following points of interest appear:

(i) In all breakdowns, as expected, consumption of clothing increases less than expenditure on clothing. This could be due to two factors:

(*a*) Groups with higher clothing expenditure pay more per garment for some or all types of garments than the lower groups.

(*b*) Groups with higher clothing expenditures buy proportionally different numbers of a different type of garments, buying comparatively more coats, say, at a high cost per "coupon" and fewer dresses or shirts at a low cost per "coupon."

It appears that in most cases the latter is as important as the former, possibly more important, as is shown later.

(ii) Whereas total consumption of clothing per head for men tends to increase less rapidly over the higher expenditure ranges, consumption per woman increases steadily and consumption per child increases more rapidly than over the lower ranges for both the breakdown according to total weekly expenditure (Table IV) and the breakdown according to total weekly expenditure per head (Table V). On the difference between men and women it is interesting to compare the

CC-0. In Public Domain. Gurukul Kangri Collection, Haridwar

Digitized by Arya Samaj Foundation Chennai and eGangotri



wartime position (Ady, 1944). In this analysis a breakdown into social class on the Board of Trade definitions, where AB are upper middle-class, E the lowest, working class and C and D in between was used. It was found that real coupon expenditure was lower in the top class than in the bottom, and this was more marked for men than for women as follows:

| Year | 1941/2 | | | | 1942/3 | | | | 1943/4 | | | |
|---|---|---|---|---|---|---|---|---|---|---|---|---|
| Class | AB | C | D | E | AB | C | D | E | AB | C | D | E |
| "Coupon" expenditure: | | | | | | | | | | | | |
| Men | 53·3 | 60·7 | 70·2 | 74·9 | 42·2 | 46·4 | 50·7 | 52·7 | 33·4 | 39·6 | 40·0 | 42·0 |
| Women | 63·8 | 67·8 | 71·6 | 73·4 | 51·3 | 54·2 | 55·9 | 56·8 | 44·9 | 46·7 | 44·6 | 44·4 |

With regard to children's consumption, although any conclusions from these figures are less reliable than for adults, the comparatively rapid increases in expenditure and consumption show that the greatly increased demand for infants' and children's clothing during the war could have been expected to arise from the raising of the standard of living of the lowest income groups.

(iii) In general, in all three breakdowns, consumption of wool and non-wool material increases considerably more than consumption of hosiery, as clothing expenditure increases, for men, women and children, and consumption of hosiery, is never under 10 "coupons" per head.

(iv) For women consumption of wool cloth increases more rapidly than, but is at the most two-thirds of, that of non-wool. For men, on the other hand, wool cloth consumption increases less than that of non-wool cloth, and it is never lower than an average of 10 "coupons'" worth per year. Women's wool cloth consumption is as low as 3 to 4 "coupons'" worth in the lowest groups in the two later breakdowns. This last difference can be explained by the difference in clothing, in that men's jackets and trousers almost invariably contain wool cloth (and have been assumed always to do so), while women's dresses need not, and are more often non-wool than wool.

As in expenditure, an attempt was made to calculate the percentage of total consumption which was absorbed by the working classes. The method of estimation of the totals is given in Note IV. Average consumption of all families in the sample of wool cloth, non-wool cloth and hosiery (as in Table IV) was used to calculate the consumption of the working class.

| | *Consumption of textiles in clothing* | | |
|---|---|---|---|
| | *Wool* (*million sq. yds.*) | *Non-Wool* (*million sq. yds.*) | *Hosiery* (*million "coupons"*) |
| "Working-class" | 180 (60%) | 370 (34%) | 630 (42%) |
| Total for United Kingdom | 300 (100%) | 1,100 (100%) | 1,500 (100%) |

There will be some duplication of consumption due to the second-hand trade, but there are no data at present giving the extent of this.

As hosiery consumption increases more slowly than consumption of cloth, one would have expected, had this trend continued, the working class to have consumed relatively more of it than of cloth. The fact that they appear not to suggests that there is a definite change of clothing habits between the working class and middle and upper classes which causes the latter to consume relatively more hosiery as a class.

The comparatively large wool-cloth and low non-wool-cloth consumption by the working class again suggests a change in clothing habits amongst the higher classes. It would be interesting to analyse data for those other groups of the population. It is possible that in the upper groups increased prices are paid for increased quality of, say, coats and suits, so that yardage consumption drops. In this connection, a comparison of the changes in prices paid is interesting, and there is evidence from the American figures given in Table VII and Table VIII below that, although in the lower income groups price paid per garment increases to a certain extent, the increases are more marked in the higher groups, while for number of garments bought, increases are larger in the lower than in the higher groups. For example, women's coats increase in price by 20 per

CC-0. In Public Domain. Gurukul Kangri Collection, Haridwar

Digitized by Arya Samaj Foundation Chennai and eGangotri



cent. and numbers bought by 80 per cent. from the first to third groups, but increase in price by over 40 per cent. and in number by under 50 per cent. from the third to fifth groups (this latter interval being slightly though not much longer than the former).

TABLE VII

*Price Paid per Garment in U.S.A.* 1935–6

| Annual income of family* | Less than £102 | £102–204 | £204–306 | £306–408 | £408–612 | £612–1,020 | Over £1,020 |
|---|---|---|---|---|---|---|---|
| Price/garment†: | | | | | | | |
| Women: | £ s. d. | £ s. d. | £ s. d. | £ s. d. | £ s. d. | £ s. d. | £ s. d. |
| Coats | 2 14 9 | 2 13 6 | 3 2 1 | 3 12 3 | 4 7 2 | 4 19 9 | 6 0 10 |
| Dresses | 7 4 | 7 7 | 9 4 | 9 6 | 13 8 | 18 6 | 1 4 10 |
| Knickers | 1 7 | 1 7 | 1 9 | 2 0 | 2 1 | 2 5 | 3 3 |
| Men: | | | | | | | |
| Suits | 3 4 9 | 3 1 1 | 3 14 3 | 4 6 9 | 4 16 8 | 5 5 0 | 6 7 9 |
| Shirts | 3 5 | 3 7 | 4 5 | 4 8 | 4 6 | 5 9 | 6 9 |
| Pants | 1 11 | 1 8 | 1 9 | 1 11 | 1 11 | 2 0 | 2 5 |
| Children: | | | | | | | |
| Dresses | 5 0 | 4 2 | 5 3 | 5 6 | 6 8 | 8 1 | 9 0 |
| Shirts | 2 6 | 2 5 | 2 7 | 2 10 | 3 0 | 3 4 | 3 9 |

* Figures taken from "Family expenditures for clothing," U.S. Dept. of Agriculture, Miscellaneous publications No. 422 and 428.

Families include "Non-relief families that include a husband and wife, both native born."

Figures are compounded from those for : (i) North Central and West small cities; (ii) North and West villages; (iii) South-East villages—white families; (iv) North and West farmers.

Statistics for "Women" are those for: (i) Wives, and (ii) Non-wives, aged 16–29. Detailed data were not given for non-wives over 29.

Statistics for "Men" are those for: (i) Husbands, and (ii) Non-husbands, aged 16–29. Detailed data were not given for non-husbands over 29.

Statistics for "Children" are those for Children aged 2–15.

† Rate of exchange taken as 4·90 dollars to the pound.

TABLE VIII

*Garments Bought per Head in U.S.A.*

| Annual income of family* | Less than £102 | £102–204 | £204–306 | £306–408 | £408–612 | £612–1,020 | Over £1,020 |
|---|---|---|---|---|---|---|---|
| Garments per head per year:— | | | | | | | |
| Women: | | | | | | | |
| Coats | 0·20 | 0·26 | 0·36 | 0·43 | 0·51 | 0·57 | 0·60 |
| Dresses | 2·40 | 2·76 | 3·51 | 3·90 | 4·42 | 4·82 | 6·77 |
| Knickers | 1·35 | 1·69 | 2·19 | 2·33 | 2·72 | 2·91 | 3·31 |
| Men: | | | | | | | |
| Suits | 0·19 | 0·27 | 0·42 | 0·53 | 0·74 | 1·02 | 1·32 |
| Shirts | 2·84 | 3·21 | 3·49 | 4·11 | 5·24 | 5·13 | 5·97 |
| Pants | 0·50 | 0·69 | 0·98 | 1·25 | 1·38 | 1·50 | 1·96 |
| Children: | | | | | | | |
| Dresses | 1·53 | 1·79 | 2·34 | 2·98 | 3·30 | 4·33 | 4·95 |
| Shirts | 2·29 | 2·18 | 2·51 | 2·96 | 3·51 | 4·18 | 4·62 |

* See note (*) for Table VII.

*Price Paid per Garment in the U.K.*

An analysis of price paid per garment was made for a limited number of garments. The results are shown in Tables IX, X and XI below.

CC-0. In Public Domain. Gurukul Kangri Collection, Haridwar

Digitized by Arya Samaj Foundation Chennai and eGangotri



## Table IX

### *Price Paid per Garment in U.K.—I*

| Total weekly expenditure of family | 40–60*s.* | 60–80*s.* | 80–100*s.* | 100–120*s.* | 120–140*s.* |
|---|---|---|---|---|---|
| | £ *s. d.* | £ *s. d.* | £ *s. d.* | £ *s. d.* | £ *s. d.* |
| Women: | | | | | |
| Coats | 1 17 5 | 1 12 3 | 1 15 10 | 1 13 9 | 2 3 4 |
| Dresses | 10 7 | 9 9 | 13 9 | 12 11 | 14 2 |
| Underclothes* | 8½ | 8¾ | 9½ | 9½ | 1 0¼ |
| Men: | | | | | |
| Suits | 2 8 7 | 2 14 8 | 3 1 0 | 2 17 5 | 3 7 2 |
| Shirts | 4 3½ | 4 8¾ | 5 1¾ | 5 1 | 4 8½ |
| Underclothes† | 2 4 | 2 6½ | 2 11½ | 2 11 | 3 0½ |
| Children: | | | | | |
| Dresses | 3 8¾ | 3 10¾ | 4 11¼ | 5 0¾ | 5 11¼ |
| Shirts | 1 9¾ | 2 5¼ | 2 11 | 2 7 | 2 9½ |

* Figure given is average price paid per "coupon" for vests, knickers, petticoats and sets (petticoat knickers). These could not be distinguished, as often a total price paid for several garments was given.
† Figure given is average price paid per garment for vests and pants.

## Table X

### *Price Paid per Garment in U.K.—II*

| Weekly expenditure per head in family | 0–10*s.* | 10–20*s.* | 20–30*s.* | 30–40*s.* | 40–50*s.* | 50–60*s.* | 60–70*s.* |
|---|---|---|---|---|---|---|---|
| | £ *s. d.* | £ *s. d.* | £ *s. d.* | £ *s. d.* | £ *s. d.* | £ *s. d.* | £ *s. d.* |
| Women: | | | | | | | |
| Coats | 1 0 5 | 1 5 4 | 2 0 8 | 2 0 2 | 1 17 5 | 1 13 6 | 2 14 0 |
| Dresses | 7 6 | 10 0 | 12 8 | 14 1 | 14 5 | 12 3 | .. |
| Underclothes* | 5¾ | 7½ | 9½ | 10¼ | 10½ | 11¾ | 1 0 |
| Men: | | | | | | | |
| Suits | 2 6 0 | 2 9 1 | 3 1 3 | 3 4 5 | 3 6 1 | 4 2 0 | 3 15 0 |
| Shirts | 4 4¾ | 4 4 | 4 10½ | 5 6 | 4 9¾ | 5 5½ | 5 6 |
| Underclothes† | 1 10½ | 2 2 | 2 9¼ | 3 7½ | 3 3¼ | 2 5½ | 4 3¼ |
| Children: | | | | | | | |
| Dresses | 4 7¾ | 3 9¾ | 5 4½ | 7 5½ | 2 11‡ | .. | .. |
| Shirts | 2 0½ | 2 4¼ | 2 11½ | 2 7¾ | 3 0½ | .. | .. |

*, † See notes (*, †), Table IX.
‡ 1 only.

## Table XI

### *Price Paid per Garment in U.K.—III*

| Expenditure per head per year on clothing‡ | £0–2 | £2–4 | £4–6 | £6–8 | £8–10 | £10–14 | Over £14 |
|---|---|---|---|---|---|---|---|
| | £ *s. d.* | £ *s. d.* | £ *s. d.* | £ *s. d.* | £ *s. d.* | £ *s. d.* | £ *s. d.* |
| Women: | | | | | | | |
| Coats | 1 4 8 | 1 7 6½ | 1 11 4½ | 2 1 11¾ | 2 0 1½ | 2 8 10¾ | 2 9 4½ |
| Dresses | 6 0¾ | 10 4½ | 11 5 | 14 5 | 14 10½ | 14 9¼ | 16 4 |
| Underclothes* | 7½ | 8½ | 10 | 9¼ | 10¾ | 9¾ | 11¾ |
| Men: | | | | | | | |
| Suits | 1 9 11 | 2 7 0 | 2 15 9 | 3 6 2 | 3 5 2 | 4 1 2 | 4 14 6§ |
| Shirts | 3 11¾ | 4 9½ | 4 10 | 5 3 | 5 2½ | 4 8½ | 6 2¼ |
| Underclothes† | 2 2¼ | 2 5½ | 2 7½ | 3 1 | 3 6 | 3 2 | 9 4¼§ |

| | £6–10 | Over £12 |
|---|---|---|
| | s. d. | s. d. |
| Children: | | |
| Dresses | 5 11¾ | 13 11½ .. |
| Shirts | 3 8 | 3 3¾ .. |

*, † See notes (*, †), Table IX.
‡ Expenditure per head implies: For women expenditure per woman on women's clothing.
,, men ,, ,, man ,, men's ,,
,, children ,, ,, child ,, children's ,,
§ Average for 2 families only.

CC-0. In Public Domain. Gurukul Kangri Collection, Haridwar

Digitized by Arya Samaj Foundation Chennai and eGangotri



It can be seen that in general while prices paid per garment increase with clothing expenditure, they do not increase enough to account for the difference between overall consumption and expenditure variations.

For example:

(i) From Tables I and IV it can be seen that expenditure on men's clothing per man increases by 130 per cent. from the lowest to highest groups and consumption increases by 30 per cent. This would require an increase of nearly 80 per cent. in price paid per garment to account for the difference. Table IX shows increases of 30 per cent. for suits, 10 per cent. for shirts and 30 per cent. for underwear.

(ii) From Tables II and V we require, similarly, an increase of 135 per cent. in prices paid from the lowest to the next to highest groups for women's clothing, while from Table X we get increases of 65 per cent. for coats and dresses and 120 per cent. for underwear.

(iii) From Table VI we require for children's clothing an increase of 90 per cent. from the lowest to the next to highest, and we get increases of 50 to 60 per cent. in the two garments taken.

There is one exception in the nine cases, namely, for women divided according to expenditure per head on clothing (Table VI) the price increases appear to account for the gap between consumption and expenditure. It is also true that I have calculated price paid per garment for comparatively few garments, but I see no reasons why the ones I have chosen should be completely unrepresentative, and consequently consider that there is strong evidence that within the working-class range, price increases only account for about half the gap between consumption and expenditure.

Prices paid in the U.S.A. (Table VII) which are divided according to income group appear to increase about the same amount over lower groups as do the British, and in some cases even less than the British. As with the United Kingdom figures, price increases are more marked for items like coats and suits than for shirts and underwear.

An analysis was made of the numbers of various garments bought by the families in the different groupings. Little could be drawn in the way of general conclusions, and the results are therefore not reproduced. The tendency for numbers bought to rise with expenditure group was particularly marked for women's coats, costumes and stockings, for men's suits, and children's frocks, shirts, socks and stockings. For other garments there were no obvious trends.

*Statistical Notes*

The distributions of these observations would, of course, be cut off at zero as there can be no negative figures. There is no indication of normality of such distributions as those of consumption of material per man per family, or price paid per garment, and the shapes of the frequency curves vary. In the former it is difficult to make tests, because the impossibility of telling whether any particular shirt, say, is wool or non-wool makes any family-to-family variation unreliable. As an indication of order of magnitude, however, the standard deviations of the variation within each cash expenditure group for the first two breakdowns, of estimated consumption per man of wool-cloth, non-wool cloth and hosiery, were calculated. In each case, when divided by the root of the number of observations in the group to test differences between means, the result was of the order of 1·5 to 2 "coupons." Finally regression coefficients of price paid per garment on expenditure per family, etc., were calculated, and were found to be many times larger than their standard deviations.

Apart from the impossibility of determining whether an individual garment is wool or non-wool, there is also the possibility of errors arising through the need to estimate the cloth content of typical garments. Generally, as this will affect all families alike, the relations between results for different families would be little altered if different "coupon" values were substituted for one or two garments. Calculations were carried out with a different figure for men's vests and pants (4 coupons instead of 5), as this is one of the more doubtful values, and the relations between families in different groupings were hardly changed. The results which would be affected are, firstly, absolute values, such as the total number of coupons per head or per family, and secondly, the relation between results for men, women and children, if errors were large in one case and

CC-0. In Public Domain. Gurukul Kangri Collection, Haridwar

Digitized by Arya Samaj Foundation Chennai and eGangotri



not in the others, or if they were in different directions. Another difficulty is that the relative values given to wool and non-wool are rather arbitrary. They are based on the relative prices per square yard of the two types, whereas a difference based on, say, relative labour content would have been more desirable. It is therefore necessary to bear these possible sources of error in mind when considering the results, especially the absolute values.

*International Comparisons on Expenditure*

Figures have been published for the U.S.A., 1935–6 (N.R.P. Board, 1941), and the Netherlands, 1938 (C.B. de Statistiek, 1946), in which families are divided according to total income of the family. These, with the Ministry of Labour's figures for 2,225 working-class families and P. Massey's figures (1942), are given in Table XII.

TABLE XII

*Expenditure on Clothing (Excluding Boots and Shoes, and Repairs)*

*United Kingdom*:—

(*a*) Working-class,* 1937–8—

| Weekly expenditure per household | Less than 40*s.* | 40*s.*–60*s.* | 60*s.*–80*s.* | 80*s.*–100*s.* | 100*s.*–120*s.* | 120*s.*–140*s.* | Over 140*s.* |
|---|---|---|---|---|---|---|---|
| Average weekly expenditure of household | *s. d.* 32 6 | *s. d.* 51 9 | *s. d.* 69 11 | *s. d.* 97 5 | *s. d.* 109 0 | *s. d.* 128 9 | *s. d.* 180 9 |
| Percentage spent on clothing | 4·5 | 5·4 | 6·1 | 6·0 | 7·0 | 7·8 | 7·4 |

(*b*) Middle class,† 1938–9:

| Annual income of head of household | £250–350 | £350–500 | £500–700 | Over £700 |
|---|---|---|---|---|
| Average weekly expenditure of household | *s. d.* 136 0 | *s. d.* 173 5 | *s. d.* 227 10 | *s. d.* 321 9 |
| Percentage spent on clothing | 7·3 | 7·1 | 7·4 | 6·9 |

*U.S.A.*, 1935‡:—

| Annual income of household | Less than £102 | £102–204 | £204–306 | £306–408 | £408–612 | £612–1,020 | Over £1,020 |
|---|---|---|---|---|---|---|---|
| Average weekly expenditure of household | *s. d.* 36 7 | *s. d.* 65 5 | *s. d.* 96 11 | *s. d.* 128 5 | *s. d.* 167 0 | *s. d.* 237 3 | *s.* 585 |
| Percentage spent on clothing | 5·6 | 6·1 | 6·9 | 7·4 | 8·2 | 9·1 | 9·4 |

*Netherlands*, 1938§:—

| Annual income of household | Less than £173 | £173–222 | £222–285 | £285–371 | £371–495 | £495–742 | Over £742 |
|---|---|---|---|---|---|---|---|
| Average weekly expenditure of household | *s. d.* 48 10 | *s. d.* 83 3 | *s. d.* 107 10 | *s. d.* 135 1 | *s.* 176 | *s. d.* 240 9 | *s.* 683 |
| Percentage spent on clothing | 5·0 | 6·0 | 7·1 | 7·1 | 7·0 | 6·8 | 6·0 |

* Ministry of Labour.

† "The expenditure of 1,360 British middle-class households in 1938–9," by Philip Massey, *Journal of the Royal Statistical Society*, Vol. CV, Part III, 1942.

‡ *Family Expenditures in the United States*, National Resources Planning Board, June, 1941.

§ Central Bureau voor de Statistiek, *Statistische en Econometrische Onderzoekingkers Nieuve Reeks*, Jaargang 1, No. 1, 1946. Rate of exchange used: 8·89 florins to the pound.

CC-0. In Public Domain. Gurukul Kangri Collection, Haridwar

Digitized by Arya Samaj Foundation Chennai and eGangotri



The U.S.A. clothing figures are not exactly comparable as jewellery and watches are included as clothing, which will make clothing expenditure appear high, particularly in the upper income groups. This means that all the sets of figures are on slightly different bases. In spite of this there is a striking similarity in the results when clothing expenditure as a percentage of total expenditure is plotted against total expenditure for the different groups in the different countries. In each case there is a fairly steep rise in the proportion of total expenditure on clothing, until about 7 per cent. is reached at an income level of about £200–250 per annum, after which there is a strong tendency for the proportion to level off.

For the U.S.A. the percentage of *income* which is allocated to clothing remains fairly constant at all income levels. The difference between this and the percentage of expenditure figures arises because of the large variation in savings from a dis-saving of 50 per cent. of income in the lowest income group to a positive saving of 40 per cent. of income in the highest group. This large dis-saving could arise from the American method of accounting for hire-purchase commitments, if 1935–6 was a year of increasing propensity to hire-purchase. This is because if new commitments were made during the year the total price of the articles was included in expenditure, and the difference between the amounts of unpaid instalments at the beginning and the end of the year was regarded as a change in liabilities, and hence recorded under savings. For the Netherlands the difference between percentage of income and percentage of expenditure is much smaller, as savings vary from a dis-saving of 2·5 per cent. of income in the lowest group to a positive saving of 10 per cent. in the highest. There are few data on which to consider the possible difference for the United Kingdom, but *a priori* I would expect it to be nearer the Dutch than the U.S.A. figure. Figures for 75 United Kingdom working-class families (each including at least one child) for 1945 and 1946 show average savings to be 1 to 2·5 per cent. of net income (Schulz, 1947).

*Conclusion*

Although these results are based on a small sample, and are subject to many reservations, they illustrate the possibilities of such analysis. They have the fault of being based on data which are to a certain extent out of date, and their value would be enhanced by a comparison with spending patterns to-day when the double currency of money and coupons is effective. As time goes on, however, for some of the population, money is once again becoming the limiting factor in clothes purchase, and a knowledge of their probable behaviour should be of interest. For example, the low pre-war consumption of wool cloth by the women with little money to spare could partially explain why it is women's coats and skirts which are one of the first groups of garments for which stocks have recovered. If further analyses could be made they should be of use both to industry and to administration as a guide to possible demand by the consumer.

The author would like to acknowledge the encouragement received from discussion with colleagues, and also the work done by Mr. R. J. Norris in helping with and checking the calculations.

*References*

Ady, P. (1944), *Bull. Inst. Stats. Oxford.*
Centraal Bureau voor de Statistiek (1946), *Statistische en Econometrische Onderzoekingkers Nieuve Reeks,* Jaargang 1, No. 1, p. 2.
Massey, P. (1942), *J. Roy. Stat. Soc.*, Vol. CV, Part III.
National Resources Planning Board (June, 1941), *Family Expenditures in the United States.*
Schulz, T. (May, 1947), *Bull. Inst. Stats. Oxford.*

*Note I*

A comparison of various statistics for the sample of 352 used, the sample of 2,001 households providing clothing budgets in the same expenditure groups, the total 2,225 households providing clothing budgets, and the 8,905 industrial households providing complete budgets show that the sample used was fairly representative.

CC-0. In Public Domain. Gurukul Kangri Collection, Haridwar

Digitized by Arya Samaj Foundation Chennai and eGangotri



| | *Sample of households* | | | |
|---|---|---|---|---|
| | 352 | 2,001 | 2,225 | 8,905 |
| Average expenditure/week | 990·20*d.* | 1,014·79*d.* | 1,055·9*d.* | 1,035*d.* |
| ,, number of children under 14 | 1·02 | 1·02 | 0·98 | 0·99 |
| ,, ,, men 14–18 | 0·20 | 0·17 | 0·17 | 0·15 |
| ,, ,, women 14–18 | 0·17 | 0·16 | 0·17 | 0·16 |
| ,, ,, men over 18 | 1·21 | 1·19 | 1·22 | 1·22 |
| ,, ,, women over 18 | 1·22 | 1·25 | 1·25 | 1·25 |
| ,, number in household | 3·82 | 3·79 | 3·79 | 3·77 |
| ,, expenditure on man's clothing/week | 26·7*d.* | 25·4*d.* | 27·5*d.* | 34·0*d.* |
| ,, ,, woman's clothing/week | 27·3*d.* | 27·2*d.* | 30·7*d.* | 29·5*d.* |
| ,, ,, children's clothing/week | 11·8*d.* | 11·7*d.* | 11·8*d.* | 11·0*d.* |

*Note II*

(*a*) Number of people represented by "working-class" budgets:

| | |
|---|---|
| The number of people insured for unemployment in 1937 was | 14,060,000* |
| The number of people earning less than £250 per annum but not insured in 1937 was | 745,000*† |
| | 14,805,000 |
| The number of insured persons receiving unemployment allowances was | 550,000‡ |
| | 14,225,000 |
| Average number of wage earners per household was | 1·75§ |
| Therefore number of households covered was | 8·2 million |
| Average number of persons per household was | 3·79§ |
| Therefore total number of persons represented | 31·1 million |

(*b*) Number of people represented by "middle-class" budgets:

It was assumed that the middle-class budgets actually compiled by teachers, civil servants and local government officials were representative of all those earning between £250 and £1,000 per annum. In fact some persons insured for unemployment would be earning over £250 p.a. as all manual workers were so insured, and some "middle-class" workers would be earning over £1,000 p.a. The number of incomes between £250 and £1,000 was 2·4 million, with an average of 3·27 persons per household,‖ giving a total of 7·7 million persons.

(*c*) The population not represented by the budgets includes:

| | |
|---|---|
| Families of unemployed on assistance approximately | 1·2 million people |
| Men in the Forces | 0·35 ,, ,, |

Domestic servants not "living-in" or working in hotels, lodging-houses, etc. (unknown quantity; total number of domestic servants in 1937 was 1·7 million).

Old age pensioners not living as part of the family (unknown quantity; total number of pensions payable March, 1938, was 1·8 million).

Families of persons earning over £1,000 per annum according to the income-tax returns (0·3 million tax returns).

(*d*) The total population was 47·29 million persons in 1937.

(*e*) Percentages of total and clothing expenditure spent by the "working" and "middle" classes were calculated from the average expenditures per family given by the Ministry of Labour and Mr. P. Massey's figures. Total expenditure of the United Kingdom was taken from "National Income and Expenditure," Cmd. 6784.

* From *Redistribution of Incomes* 1937, Barna. Clarendon Press, 1945.

† Includes—Central Government 195, Local Government 88, Policemen 62, Public Utilities 71, Railway workers 323 and Mental Hospitals 6 thousand.

‡ Figure for November, 1937, *Ministry of Labour Gazette*, December, 1937.

§ Ministry of Labour budget enquiry.

‖ P. Massey's budget enquiry.

CC-0. In Public Domain. Gurukul Kangri Collection, Haridwar

## Note III

The following table gives estimates of the amount of wool and non-wool material in different types of garment. In some cases factual information was available, in others more or less informed estimates have been made.

| | Material (linear yards) | | | | | | Remarks |
|---|---|---|---|---|---|---|---|
| | Men | | Women | | Children | | |
| | Wool | Non-wool | Wool | Non-wool | Wool | Non-wool | |
| Suits | 3·33 | 3·13 | 2·50 | 2·34 | 1·83 | 1·72 | .. |
| Jackets | 1·92 | 3·13 | 1·50 | 2·34 | 1·25 | 1·72 | Children's blazers assumed all wool, no lining. |
| Trousers | 1·33 | .. | .. | .. | 1·00 | .. | M. and C., 1 shorts = ½ trousers. W., 1 slacks = 1½ skirts. Assumed all wool. |
| Skirts | .. | .. | 1·00 | .. | 0·75 | .. | Assumed all wool. 1 shorts = ½ slacks. |
| Overcoats | 2·83 | 2·50 | 2·67 | 2·36 | 1·50 | 1·32 | .. |
| Raincoats | 3·55 | 2·80 | 2·25 | 1·78 | 1·67 | 1·32 | .. |
| Macs. | .. | 3·00 | .. | 3·00 | .. | 2·33 | M., W., C., 1 cape = ½ mac. 1 oilskins = 1 mac. Assumed all non-wool. |
| Scarves | .. | 0·50 | .. | 0·50 | .. | 0·50 | Assumed all non-wool except children's assumed 50% hosiery. |
| Overalls | .. | 4·50 | .. | 4·00 | .. | 2·00 | 1 pinafore = 1 apron = 1 coat = 1 rompers = ½ overall = ½ smock = 2 dust caps. Assumed all non-wool. |
| Frocks | .. | .. | 2·44 | 3·50 | 1·75 | 2·50 | 1 evening frock = 2 day frocks. 20% of all frocks assumed wool, 80% assumed non-wool. |
| Shirts | 3·00 | 3·00 | .. | .. | 1·83 | 1·83 | 5% of all shirts assumed wool. 95% of all shirts assumed non-wool. 1 front = ¼ shirt. |
| Blouses | .. | .. | 1·67 | 1·67 | 1·00 | 1·50 | 5% of all blouses assumed wool. 95% of all blouses assumed non-wool. 1 front = ¼ blouse. |
| Collars | .. | 0·17 | .. | 0·17 | .. | 0·17 | Assumed all non-wool. |
| Ties | .. | 0·14 | .. | 0·14 | .. | 0·14 | ,, ,, |
| Caps | 0·25 | 0·21 | .. | .. | 0·125 | 0·08 | .. |
| Pyjamas | 4·33 | 4·33 | 4·00 | 3·75 | 2·95 | 2·75 | 10% of all pyjamas assumed wool. 90% of all pyjamas assumed non-wool. 1 sleeping suit = 1 pyjamas. |
| Nightgowns | 4·33 | 4·33 | 4·00 | 2·75 | 3·00 | 1·83 | 10% of all nightgowns assumed wool. 90% of all nightgowns assumed non-wool. |
| Dressing gowns | 2·75 | .. | 2·75 | .. | 1·67 | .. | Assumed all wool. |
| Knickers | .. | .. | .. | 1·00 | .. | 0·67 | 20% assumed woven, 80% assumed hosiery. All woven assumed non-wool. |
| Petticoats | | | | 1·67 | | | |

CC-0. In Public Domain. Gurukul Kangri Collection, Haridwar

Digitized by Arya Samaj Foundation Chennai and eGangotri

| | | | |
|---|---|---|---|
| *Petticoats* | 1·67 | 0·83 | Assumed all woven all non-wool. 1 cami-knicks = 1 petticoat. |
| *Brassiere* | 0·25 | 0·25 | Assumed all non-wool. |
| *Corsets* | 0·70 | 0·70 | ,, ,, 1 suspender belt = ½ corset. |
| *Gym tunics* | .. | 1·50 | ,, ,, |
| *Babies' silk or linen suits* | .. | 1·00 | .. |
| *Barracoats* | 0·75 | .. | .. |

Material over 2*s.* per yard assumed to be woollen, unless otherwise specified.

| | *Hosiery coupons* | | | |
|---|---|---|---|---|
| | *Men* | *Women* | *Children* | |
| Socks | 2 | 1 | 1 | .. |
| Stockings | 2 | 2 | 1 | 1 women's socks = ½ stockings. |
| Vests | 5 | 3 | 2 | .. |
| Pants | 5 | .. | 2 | .. |
| Knickers | .. | 3 | 2 | Assumed 80% hosiery. |
| Combs. | .. | 5 | 3 | .. |
| Jersey | 6 | 6 | 4 | 1 matinée coat = ½ jersey = 1 leggings (kn). 1 bed jacket = 1 jersey. |
| Knitted suits | .. | 12 | 8 | .. |
| Gloves | 1 | 1 | 1 | 20% assumed hosiery, 80% assumed leather. |
| Bathing costumes | 3 | 3 | 2 | Bathing trunks = ½ bathing costume. |
| Shawl | .. | .. | 4 | .. |
| Layette | .. | .. | 18 | Assumed 1 shawl, 3 vests, 1 suit. |
| 1 oz. wool | ½ | ½ | ½ | .. |
| Bodices | .. | .. | 2 | .. |
| Scarves | .. | .. | 3 | Assumed 50% hosiery, 50% non-wool. |

Suspenders, belts, braces, ribbon, elastic, rubber aprons and knickers all omitted.

CC-0. In Public Domain. Gurukul Kangri Collection, Haridwar
Digitized by Arya Samaj Foundation Chennai and eGangotri

Digitized by Arya Samaj Foundation Chennai and eGangotri



*Note IV*

*Total Consumption of Textiles in Apparel*

1. Hosiery:

Import Duties Act Inquiry, 1937, gives available for home consumption, 1937:

| | | |
|---|---|---|
| Stockings and socks | 38,025,000 | dz. pairs. |
| Underwear | 12,250,000 | ,, |
| Wool jumpers | 2,574,000 | ,, |
| ,, suits | 91,000 | ,, |
| Other wool outerwear | 1,133,000 | ,, |
| Gloves | 847,000 | ,, pairs. |

Home Production, 1937:

| | | |
|---|---|---|
| Non-wool jumpers | 503,000 | dz. |
| ,, suits | 10,000 | ,, |
| ,, other outerwear | 381,000 | ,, |
| Bathing costumes | 299,000 | ,, |

The *Board of Trade Journal*, October 26, 1946, gives consumption of hosiery for 1945 in more detail. After allowing for the fact that pre-war there were nearly as many civilian men as women, while in 1945 a number of men were in the Forces, it is assumed that the breakdown of the consumption of underwear, jumpers, etc., into adults' and children's was in roughly the same proportion in 1937 as it was in 1945.

This gives the following average "coupon" rates:

| | |
|---|---|
| Socks and stockings | 1·8 |
| Underwear | 3·4 |
| Jerseys | 5·1 |
| Other outerwear | 4 |
| Bathing costumes | 3 |
| Gloves | 1 |
| Suits | 12 |

Giving an overall consumption rate of 1,534 million "coupons."

2. Wool material:

I.D.A.I. 1937 gives production export and import figures for wool material. Omitting piece-goods weighing over 16 oz. per sq. yd., damasks, tapestries, brocades, blankets, rugs and carpets, we get as available for home consumption:

| | | |
|---|---|---|
| Wool and worsted tissues less than 12 oz./sq. yd. | 236,110,000 | sq. yds. |
| ,, ,, ,, 12–16 oz./sq. yd. | 39,927,000 | ,, |
| Linings and lastings | 6,418,000 | ,, |
| Flannel | 14,494,000 | ,, |
| Tissues of mohair, alpaca, cashmere, etc. | 4,563,000 | ,, |
| Total | 301,512,000 | ,, |

3. Non-wool material:

The Cotton Working Party Report gives the pre-war home-consumption of cotton in the form of apparel as 700 million sq. yds. The figure for artificial silk is based on returns for 1939–1940.

Assuming that 100 per cent. of silk piece-goods, and 100 per cent. of linen and hemp piece-goods other than sailcloth canvas, towelling or damask, is used for apparel, we get a total quantity available for home consumption of:

| | | | |
|---|---|---|---|
| Cotton | 700 | million | sq. yds. |
| Silk | 33 | ,, | ,, |
| Art silk | 327 | ,, | ,, |
| Linen and hemp | 60 | ,, | ,, |
| | 1,120 | ,, | ,, |

CC-0. In Public Domain. Gurukul Kangri Collection, Haridwar

Digitized by Arya Samaj Foundation Chennai and eGangotri



# REPORTS FROM COUNCIL AND NOTICES TO FELLOWS

## The Certificate Examination of the Royal Statistical Society

As a result of the second Certificate examination open to Fellows of the Society, held in September, 1948, the following thirteen candidates have been awarded the Certificate of the Society.

Allinson, Vanessa Adele.
Aston, Arthur Harold.
Brown, Marjorie Elizabeth.
Carruthers, Nellie.
Deeks, Herbert William George.
Edge, Charles Geoffrey.
Kensit, George Robinson.
Komlosy, Graham Frederick.
Lloyd, David.
Poulton, Emily Penelope.
Richards, Dennis Leslie.
Skinner, John Cecil.
Whitehouse, Arnold Martyn.

Copies of the papers set at this and the previous examination are obtainable at 1*s.* per set, post free, on application to the Assistant Secretary.

---

## Conference at Oxford, October, 1948

On Saturday and Sunday, October 2nd and 3rd, the Society held a week-end Conference at St. Hugh's College, Oxford. The official business of the Conference was transacted in five sessions, each of two hours, at which thirteen papers were read and discussed. These papers, which covered a wide variety of subjects, were contributed by Fellows and others working in the University of Oxford. The speakers had been asked to choose their material with a view to the encouragement of discussion, and not necessarily for the presentation of completed investigations. In many instances the paper read represented only one part of a research project, and of these a full account will eventually be published in this *Journal* or elsewhere. In the present instance it is necessary, therefore, to record the papers only by title.

At the first session, on the Saturday afternoon, the President, Dr. David Heron, welcomed the members of the Conference, and said that he regarded it as the fulfilment of hopes that meetings of the Society might be held outside London, expressed in his Presidential address a year earlier. The programmes of the five sessions were as follows:—

*Session I*—(Chairman: Professor M. S. Bartlett).
Mr. D. G. Kendall (Magdalen College), "Stochastic processes and population growth."
Mr. P. H. Leslie (Bureau of Animal Population), "A problem in the analysis of population growth" (read by Dr. Finney).
Mr. P. A. P. Moran (Institute of Statistics), "The spectral theory of discrete stochastic processes."

*Session II*—(Chairman: Professor A. Bradford Hill).
Dr. I. Sutherland (Institute of Social Medicine), "The stillbirth rate."
Dr. R. W. Parnell (Institute of Social Medicine), "Student health."
Mr. M. C. K. Tweedie (Wellcome Laboratory of Human Nutrition), "Some statistical problems in human nutrition."

*Session IIIA*—(Chairman: Professor J. H. Jones).
Prof. D. G. Champernowne (Nuffield College), "International trade and British employment, 1929–39."
Mr. K. G. J. C. Knowles (Institute of Statistics), "Industrial disputes in Great Britain, 1911–47."

*Session IIIB*—(Chairman: Professor E. S. Pearson).
Mr. B. Babington Smith (Institute of Experimental Psychology), "Some problems of experimental method in psychology."
Mr. A. N. Black (Engineering Laboratory), "Comfort estimation as a basis for road curve design."
Dr. R. B. Fisher (Department of Biochemistry), "An application of discriminants to clinical chemistry."

*Session IV*—(Chairman: Sir Henry Clay).
Mr. G. R. MacDougall (Wadham College) "Britain's bargaining power" (read by Prof. Champernowne).
Mr. G. D. N. Worswick (Institute of Statistics), "The measurement of inflation."

CC-0. In Public Domain. Gurukul Kangri Collection, Haridwar

Digitized by Arya Samaj Foundation Chennai and eGangotri



Apart from the presentation of these papers and the lively and useful discussions to which they gave rise, limited only by the time-table, the Conference proved itself very valuable for the opportunities it gave for new contacts and leisured conversations between Fellows who seldom meet one another. The need for such meetings is indicated by the fact that on this first occasion of a week-end conference, ninety-four Fellows stayed in St. Hugh's College, while others resident or staying elsewhere in Oxford brought the attendance up to about 120. All the Sessions were well attended, there being audiences of over 100 at Sessions I, II and IV, and about 50 at each of IIIA and IIIB (which took place simultaneously).

---

### Articles on Statistical Data

One of the shortcomings of the field of statistics since the war has been the absence of any connected and critical account of what type of statistical information is collected and published for various branches of production, trade, commerce, finance and so on. In this respect it is clear that valuable service will be given by the series of Guides to Official Sources now being issued by the Interdepartmental Committee on Social and Economic Research (of which No. 1, issued in 1948, dealt with Labour Statistics). These pamphlets are, however, limited to British official sources of data, and presumably will not attempt a critical discussion of the whole field. The Council has, therefore, approached Fellows with expert knowledge of particular types of statistics and invited them to contribute articles to the *Journal* (*Series A*). They intend that such articles shall describe the statistical information that exists in their particular fields, how it is collected and published, what are the pitfalls in interpreting it, and how it might be improved. Except illustratively their function will not be to give the statistics themselves. These articles the Council hopes to publish from time to time, and in the present issue of the Journal (p. 133) it has included the first in the series—U.K. Shipping Statistics by Mr. M. G. Kendall. Offers of contributions to the series will be welcome. Reprints of the articles will be available, price 1*s.* each, post free.

---

The President has appointed as his Vice-Presidents for the Session 1948–49, Sir Henry Clay, Professor A. Bradford Hill, Dr. J. O. Irwin and Mr. M. G. Kendall.

---

The list of the latest elections to membership of the International Statistical Institute includes the names of Mr. J. R. N. Stone and Professor A. C. Aitken for the United Kingdom and Dr. Jerzy Neyman for the United States.

---

The Society has a certain number of surplus copies of the *Jubilee Volume* (1885) and the *Annals of the Royal Statistical Society*, 1834–1934. These are now offered to Fellows free of charge. Applications should be made to the Assistant Secretary.

---

CC-0. In Public Domain. Gurukul Kangri Collection, Haridwar

Digitized by Arya Samaj Foundation Chennai and eGangotri



# REVIEWS OF STATISTICAL AND ECONOMIC BOOKS

## CONTENTS


| | PAGE |
|---|---|
| 1.—*Kelley* (*T. L.*). Fundamentals of Statistics | 163 |
| 2.—*Hill* (*A. Bradford*). Principles of Medical Statistics | 164 |
| 3.—*Kirk* (*Dudley*). Europe's Population in the Inter-war Years | 165 |
| 4.—Population Policy in Great Britain (A Report by Political and Economic Planning) | 165 |


1.—*Fundamentals of Statistics.* By Truman Lee Kelley. Cambridge, Mass.: Harvard University Press, 1947 (London: Cumberlege). xvi + 755 pp. $8\frac{3}{4}''$. 55*s.*

It would appear that this book was written primarily for the newcomer to statistics, and indeed the author states that it is designed as an introduction to the advanced study of the subject. Reviewed from this aspect, the chief objection which might be made is the paucity of numerical examples of the various statistical techniques described. However, the author points out that his primary object is the presentation of the logical background of "summarizing statistics," and maintains the opinion, for example, that "It is believed to be more important for a student to understand why a mean is employed than to know the steps for calculating it; why and when a product-moment correlation coefficient is significant than to master the intricacies of the xInt correlation chart." This may be so, but the result is inevitably a book to which easy reference cannot be made by the student interested in methodology, and whether or not this is commendable cannot easily be judged.

The first ten chapters cover, in varying detail, the elementary techniques, and should be sufficient in themselves as an introduction to the subject. Chapters XI, XII and XIII deal briefly with more advanced subjects, and should be read in conjunction with other works, to which ample references are given.

Chapter I consists of an introduction to the subject, with comments on sampling generally and some interesting notes on the historical background. The development of the idea of statistical series is particularly instructive. A rather long digression occurs on the mathematical knowledge necessary to the student of statistics, and a mathematical "background test" is discussed in some detail and an example of such a test is given in an appendix. At the end of this chapter, as with the next three but not thereafter, there are a number of problems. (Reference is made to a problem number 6 which does not appear). Two of these problems might appear rather formidable to the beginner, but they are well worth trying for their instructive value.

Types of data, problems and statistical processes normally encountered are classified in the next chapter, which makes an excellent supplement to the introduction, and based upon these classifications the construction of tables is described. Unfortunately very few examples are given. Possibly this would have been an appropriate place in the text for the introduction of frequency distributions, which, in fact, is postponed until the next chapter. The latter, which is primarily concerned with graphical presentation, is extremely detailed, and takes up about a tenth of the whole book; methods are described of depicting time series, quantitative series and geographic series, and three-dimensional diagrams are described in detail. The discussion of various geographical projections is extremely interesting, but it is doubtful whether a text book on statistics is the correct place for such discussion. From the student's point of view it is also rather unfortunate that reference is made to means, medians, and chi-square before these subjects have been discussed in detail.

Chapter V is a discourse on the "stable features of phenomena," and Chapter VI is concerned with measures of variability. Here again some confusion might arise in the minds of beginners, since measures of location are described, with the exception of the arithmetic mean, in a later chapter. The arithmetic mean, naturally, has to be introduced in the chapter on variability, since it is not dealt with earlier. However, the existing sequence does not detract from a comprehensive development of the subject of variance in general and the variance and standard deviation of the mean in particular. Also included in this chapter are expressions for the calculation of the third and fourth moments together with arithmetical examples of their computation in an ungrouped series of data, and a brief reference is made to cumulants and $k$ statistics. Standard errors of the mean and the moments are discussed, and a further section is devoted to the mean deviation.

Measures of central tendency are the subject of Chapter VII, which includes a description of the common types of frequency distribution, and their effects upon the various types of averages described. The median, mode, geometric mean and harmonic mean are then discussed, and various measures of skewness and kurtosis are listed. The normal curve is treated from various aspects in the following chapter—firstly as a distribution of chance occurrences and errors,



CC-0. In Public Domain. Gurukul Kangri Collection, Haridwar

Digitized by Arya Samaj Foundation Chennai and eGangotri



secondly as a distribution of biological and other data, and thirdly as a basis for statistical arguments and procedures. A good numerical example is given of fitting such a curve to observed data, and the final section of this chapter illustrates the relationship of chi square, $t$ squared and the variance ratio to the normal distribution. It is possible that this latter would be more appropriately included in sections dealing with attributes, Student's $t$ distribution and the analysis of variance respectively.

Chapter IX includes the examination of class frequencies, the binomial distribution and chi square, but the treatment of the latter in particular is very scanty.

Ideas of correlation and regression are developed from Galton's graphical treatment to the product-moment method of calculating the correlation coefficient. Only one arithmetical example occurs in this chapter (X), and a suggested *pro forma* for easy calculation is given in an appendix. Spearman's rank correlation coefficient is discussed, and this section would be greatly improved by the inclusion of some numerical data, as has been done in the explanation of biserial $r$ which follows. Fourfold tables are also examined in this chapter.

In Chapters XI, XII and XIII a diversity of subjects is discussed and, as the author points out, this should be read in conjunction with the quoted sources. The subjects included are multiple and non-linear regression, the correlation ratio, the solution of equations by the Doolittle method and by determinants, the use of matrices in multiple correlation, periodicity, curve fitting, interpolation and sequential analysis. Finally, Chapter XIV gives several mathematical functions "having unique properties which may be suggestive of phenomenological relationship" which are included and briefly discussed "as a background." Matrices and determinants, Gamma functions, LaGrange multipliers and the Euler-MacLaurin theorem are amongst the more important items enumerated. Detailed references to statistical tables and a useful selection of the latter are given.

In general this book is handicapped by the method of printing (copy typescript) and the lay-out which this imposes, and by the fact that several errors in formulae and tables have escaped detection. In a text-book of this size such subjects as the analysis of variance and covariance are worthy of considerable enlargement. It is doubtful whether the treatment of the more elementary ideas is such that a true novice to the subject could use this as a first text-book. However, since the emphasis throughout is on the reasons for employing the various statistics described, rather than upon their specific calculation, the author does considerable service to the subject in promoting a proper sense of proportion, and it may well be that this work will be of considerable value, from the beginner's point of view, in instilling a right sense of caution in his handling of newly acquired tools of reasoning.

E. A. C.

2.—*Principles of Medical Statistics.* By A. Bradford Hill. 4th ed. London: *The Lancet*, 1948. xi + 252 pp. 8½″. 10*s.* 6*d.*

In the seven years that have elapsed since its first appearance, Professor Bradford Hill's text-book has come to be, for workers in medical fields, the normal approach to a knowledge of statistical methods. In this new edition the author has taken the opportunity, denied him until now by the difficulties of war-time, of adding new sections and of modifying and amplifying the text in those places where experience has shown that readers found difficulty. The additions are for the most part aimed at increasing the clarity of exposition in a text which is already distinguished for this quality. The scope of the book has, however, been enlarged by the inclusion of material relevant to the problems of preventive medicine—a field in which the book has come to be used as widely as in the field of clinical medicine for which it was originally intended.

The author has not extended the book beyond the limits of large-sample theory, although it might be thought that readers capable of using a $\chi^2$ table would not be confounded by a table of $t$, especially as Professor Bradford Hill has shown his peculiar talent for revealing the common sense that lies behind unfamiliar arithmetic. The beautifully clear approach to the problems of sampling and sampling-error has been made more complete by a section on the Normal distribution, the absence of which from earlier editions was a remarkable feature of the book. A small improvement that could have been made is the transference to this part of the book of the introduction of $n - 1$ instead of $n$ as the divisor when an estimate of the standard deviation is made from a sample. Appearing as it does now in the chapter on methods of calculating the standard deviation this modification can be confusing, and the reader may be left without a clear conception of the idea of estimation. It is not uncommon to find that $n - 1$ has been used when a standard deviation is employed in its purely descriptive sense as a measure of spread in a population, and although the error itself is trivial, the underlying misconception may not be.

In an extension of the chapters on $\chi^2$ a valuable warning is given against a too-sanguine interpretation of what appears to be a logical order in the percentages found in a contingency table,

CC-0. In Public Domain. Gurukul Kangri Collection, Haridwar

Digitized by Arya Samaj Foundation Chennai and eGangotri



which from a $\chi^2$ test was found to be non-significant. The incorrectness is pointed out of the popular device of multiplying the chance of finding an explicable order—steadily increasing or decreasing percentages, for instance—by the chance given by the $\chi^2$ test, but the explanatory paragraph which follows will not bear examination. A rigorous proof would be outside the scope of the book, but explanation is not really necessary; the warning would in itself be sufficient.

The magnificent collection of common fallacies and difficulties, which occupies three chapters of the book, has also been enlarged in this edition. The more timorous reader, after studying these chapters, might perhaps feel that the danger of reasoning fallaciously from numerical data is too great; part of his apprehension might disappear if a system of classification of the sources of fallacy could be evolved and included in the book. The present concluding chapter does not entirely fulfil this purpose. The absence, from these chapters on fallacies, of the summaries which are so useful a feature of all other chapters leads us to hope that perhaps Professor Bradford Hill has considered the possibility of classification, and that it may be realized in a later edition.

A similar summarizing list, of the various devices for standardizing, and of the standardized indices in common use, would also add greatly to the value of the chapters which describe these, in their rather bewildering profusion. It would have the additional advantage that, if the book were constantly used for reference, the medical worker would as constantly be reminded of the need for sound logic and clear thinking in treating numerical data, the principles which this excellent book is concerned to instil.

P. D. O.

3.—*Europe's Population in the Inter-war Years.* By Dudley Kirk. Geneva, League of Nations, 1946. xii + 307 pp. $10\frac{1}{2}''$.

This is the fourth and last of a series of studies on the demography of Europe undertaken for the League of Nations by the Office of Population Research of Princeton University. In this volume Dr. Kirk presents an analysis of the changing picture of the distribution of European population over the surface of the Continent in the inter-war period. He first sets out the changes in the populations of the various nations and of the administrative areas making up those nations (some 600 such areas are considered for Europe as a whole), and then analyses these changes in terms of the movements in fertility, mortality and migration which have contributed to them. The close relationship between these movements and general trends in social and economic development is shown, and the probable future pattern of European population discussed.

Dr. Kirk's work is valuable for at least two reasons. First, he has brought together in a convenient form a mass of demographic information derived from European censuses and annual statistics, and he has fitted this information together to give a picture of Europe and its regions as a whole. The lack of comparability between the data published by the European countries alone makes this no mean accomplishment. It should be noted that in the detailed analysis of migratory movements account is taken not only of overseas migration but also of international migration within Europe and internal migration within nations, and of the relations between these different forms of population mobility. Secondly, Dr. Kirk has emphasized the need for viewing the demographic and associated social and economic trends of Europe *as a whole*. The differences in the demographic patterns of the various countries of Europe should be regarded as due to the different stages of demographic development which they have reached rather than to any essential dissimilarities between the countries themselves. Thus the Eastern parts of Europe are demographically speaking in much the same position as the Western parts were two or three generations ago. Accordingly we can get some idea of the probable future behaviour of the population of Eastern Europe from the behaviour of that of Western Europe in the past. From this point of view Dr. Kirk's book is a real contribution to the understanding of the demographic history of Europe and of what the future portends. But in addition he has produced a most useful work of reference.

P. H. K.

4.—*Population Policy in Great Britain.* (A Report by Political and Economic Planning.) London, P.E.P., 1948. 227 pp. $9\frac{3}{4}''$. 15*s*.

The likelihood that the British population will decline in the future unless steps are taken to raise fertility has resulted in considerable interest in the need for, and in the form of, a definite policy aimed at avoiding the probable decline. This is the problem dealt with by this report. Having set out the present demographic position of Great Britain and the possibilities for the future, it stresses the need for a positive policy. It emphasizes that for such a policy to be democratic it must be based on the principle of *voluntary parenthood*, i.e. that parents should be free to decide the size of their family. Furthermore, a policy aimed merely at preventing a decline in the population is not sufficient; it must aim at raising the quality of the population by improving both the environmental and hereditary factors which influence it. Practical suggestions are made

CC-0. In Public Domain. Gurukul Kangri Collection, Haridwar

Digitized by Arya Samaj Foundation Chennai and eGangotri



for reducing population wastage by improved health and welfare services, and for encouraging an increase in the size of families by removing the economic disabilities of parenthood and by moulding housing policy to suit family requirements. A section on migration deals with the desirability of the recent proposals for large-scale emigration from Great Britain, and with the possibility of bolstering up the British population by immigration.

There is nothing very new in this report, but it should provide a useful background for discussions on population policy, and for the fuller and more technical reports which can be expected to emerge from the investigations of the Royal Commission on Population. However, it is to be regretted that the report does not include some estimate of the probable costs in man power and financial resources which the implementation of its recommendations would involve. The lack of this information makes it difficult to assess the feasibility of the suggested policies.

One thing emerges clearly from this report, namely, that if the principle of voluntary parenthood is accepted (and in the opinion of this reviewer such acceptance is desirable) a population policy must be based on reducing the unattractiveness of parenthood so that parents will themselves *want* more children. Such a policy would involve improvements in social services which can be regarded as desirable quite apart from their relation to population, so that the implementation of such a policy would in itself be worth while even if it did little to solve the "population problem." There can, of course, be no guaranteed method of raising the fertility of a population so long as parents are able to determine the size of their family, and there will be few who suggest that they should not be able to do so.

Finally, it is well worth drawing attention to an important point made by the report in its section on migration. On page 102 it is stated that "even if Britain would be better off with fewer people (and this is far from certain) the adverse effects of the process of decline might outweigh the advantages of a smaller population." This possibility is far too often overlooked by those who advocate large scale emigration as a panacea for Britain's present ills, and the report has done a service in emphasizing it.

P. H. K.

CC-0. In Public Domain. Gurukul Kangri Collection, Haridwar

Digitized by Arya Samaj Foundation Chennai and eGangotri



# STATISTICAL NOTES

## British Official Statistics

The interim index of *retail prices* compiled by the Ministry of Labour and National Service remained unchanged at 108 from July to November. The food figure in the last four months was slightly lower than in July, but the clothing figure showed a rise of 5 points in November compared with July. The figures for other groups of items showed little change in the period. The detailed figures for July to November were as follows :

(Prices at June 17, 1947 = 100)

| *Date* | *Food* | *Rent and Rates* | *Clothing* | *Fuel and Light* | *Household Durable Goods* | *Miscellaneous Goods* | *Services* | *Drink and Tobacco* | *Total* |
|---|---|---|---|---|---|---|---|---|---|
| Weights | 348 | 88 | 97 | 65 | 71 | 35 | 79 | 217 | 1,000 |
| July, 13, 1948 | 108·2 | 99·2 | 109·6 | 110·8 | 107·7 | 109·3 | 104·8 | 110·8 | 108 |
| Aug. 17 ,, | 107·5 | 99·2 | 111·8 | 111·1 | 108·1 | 109·3 | 104·9 | 110·8 | 108 |
| Sept. 14 ,, | 107·4 | 99·2 | 113·2 | 111·2 | 108·2 | 109·3 | 104·9 | 110·8 | 108 |
| Oct. 12 ,, | 107·6 | 99·5 | 114·1 | 112·0 | 108·5 | 109·3 | 105·1 | 110·8 | 108 |
| Nov. 16 ,, | 108·1 | 99·5 | 114·8 | 112·0 | 108·6 | 109·3 | 105·1 | 110·8 | 109 |

In publishing the figures, the Ministry of Labour states that they are in the form in which they are used in the procedure adopted for calculating the index for all the groups combined, i.e. to the nearest first place of decimals. The decimals are shown only in order that, if desired, calculations can be made of the effect of combining particular groups and excluding others. The information available as to price changes, however, is such that no precise significance can be attributed to the decimals, and for any other purposes, therefore, the figures should be used to the nearest whole number.

---

The Ministry of Labour index of weekly *wage rates* for the end of November showed the first movement since June, the rise from 106 to 107 being due to the wage increases in the engineering and shipbuilding industries. The following is a summary of the figures since June, 1947, when the present series was instituted :

(Wage Rates at end of June, 1947 = 100)

| *Date (end of month)* | *Men* | *Women* | *Juveniles* | *All Workers* |
|---|---|---|---|---|
| June, 1947 | 100 | 100 | 100 | 100 |
| Sept. ,, | 101 | 101 | 102 | 101 |
| Dec. ,, | 103 | 103 | 106 | 103 |
| Mar., 1948 | 105 | 107 | 107 | 105 |
| June ,, | 105 | 107 | 108 | 106 |
| July ,, | 105 | 108 | 108 | 106 |
| Aug. ,, | 106 | 108 | 109 | 106 |
| Sept. ,, | 106 | 108 | 109 | 106 |
| Oct. ,, | 107 | 109 | 109 | 107 |
| Nov. ,, | 107 | 109 | 110 | 107 |

---

The downward trend in the total working population since the end of 1947 was reversed in August to October, largely owing to school-leavers entering the employment field. The number

CC-0. In Public Domain. Gurukul Kangri Collection, Haridwar

Digitized by Arya Samaj Foundation Chennai and eGangotri



of workers in civil employment continued to rise and the figure for October was 152,000 higher than in June. The following table shows the figures for June to October :

| | *Total Working Population (excluding indoor private domestic service)* | | | *Thousands Numbers in Civil Employment** | | |
|---|---|---|---|---|---|---|
| | *Men* | *Women* | *Total* | *Men* | *Women* | *Total* |
| June, 1948 | 14,559 | 5,727 | 20,286 | 13,431 | 5,626 | 19,057 |
| July, ,, | 14,534 | 5,731 | 20,265 | 13,448 | 5,621 | 19,069 |
| Aug. ,, | 14,553 | 5,755 | 20,308 | 13,491 | 5,646 | 19,137 |
| Sept. ,, | 14,583 | 5,766 | 20,349 | 13,543 | 5,651 | 19,194 |
| Oct. ,, | 14,575 | 5,786 | 20,361 | 13,543 | 5,666 | 19,209 |

* Including N.F.S., Police and Civil Defence.

The level of *unemployment* rose slightly in August, owing largely to the registration of school-leavers. After a fall in September it rose again in October and November, mainly as a result of a seasonal increase in the numbers out of work in the hotel, catering and entertainment industries.

*Number of Unemployed Persons on the Registers of the Employment Exchanges of the Ministry of Labour and National Service*

| Date | *Men and Boys* | *Women and Girls* | *Total* |
|---|---|---|---|
| July 12, 1948 | 214,956 | 67,218 | 282,174 |
| Aug. 16 ,, | 226,266 | 72,507 | 298,773 |
| Sept. 13 ,, | 223,602 | 70,686 | 294,288 |
| Oct. 11 ,, | 234,403 | 80,055 | 314,458 |
| Nov. 15 ,, | 237,963 | 84,980 | 327,943 |

The total for November, 1948, includes 39,381 married women and 7,574 ex-Service personnel who had had no employment since leaving the Forces. The totals do not include registered disables persons who were classified as suitable only for employment under sheltered conditions.

CC-0. In Public Domain. Gurukul Kangri Collection, Haridwar

Digitized by Arya Samaj Foundation Chennai and eGangotri



## CURRENT NOTES

Attention may perhaps be drawn to two series of publications recently received in the Library dealing with production and trade in various agricultural products. One set issued by the Commonwealth Economic Committee (formerly the Imperial Economic Committee) reviews the output, international trade and consumption during approximately the past decade of various commodities of particular interest to the countries of the British Commonwealth of Nations. Those so far dealt with are: (1) Plantation Crops, covering sugar, tea, coffee, cocoa, spices, tobacco and rubber; (2) Industrial Fibres, viz. cotton, wool, silk, flax, jute, hemp, mohair, coir and rayon; (3) Dairy Produce, that is, butter, cheese, preserved milk, casein, eggs, egg products and margarine; and (4) Vegetable Oils and Oilseeds, including ground nuts, cottonseed, linseed, soya beans, coconut and oil palm products, olive oil and other oil seeds and oils. Anyone wishing to examine in general outline the trade conditions of any of these products since 1936–37 should find these summaries extremely handy. They are obtainable from H.M. Stationery Office, price 5*s.* each. Others in the same series will deal with meat, fruit and grain crops.

A second series of Reports somewhat analogous in character is being issued by the Food and Agriculture Organization. Those so far published deal with (1) Rice; (2) Wheat and Rye; (3) Vegetables and Fruit in Europe; (4) Poultry and Eggs; (5) Dairy Products; and (6) Live-Stock and Meat. These, however, are more particularly intended to provide up-to-date information on all matters connected with the current situation and future outlook of the commodities mentioned. They are obtainable from the London Office of the F.A.O., 1*s.* 3*d.* each.

---

Dr. Elsas, who is a member of the International Scientific Committee on Price History, is continuing his valuable outline history of German prices and wages (*Umriss einer Geschichte der Preise und Löhne in Deutschland vom Ausgehenden Mittelalter bis zum Beginn des Neunzehnten Jahrhunderts*) the first volume of which was issued in Leiden in 1936 and reviewed in Part III of the Journal, 1937. This volume was concerned with Munich, Augsburg, and Wurzburg during the period 1399 to 1820. Part A of the second volume, showing prices and wages from 1350 to 1820 in Frankfurt, Leipzig and Speyer, was to have been published in 1940 but, owing to the invasion of Holland, appeared in 1946. It is hoped that Part B, which will contain a summary of the results and the author's conclusions, will not be long delayed.

---

An international Congress of Mathematicians will be held in Cambridge, Massachusetts, from August 30 to September 6, 1950, under the auspices of the American Mathematical Society. The Society originally planned to act as host for a Congress in September, 1940, which was also scheduled to meet in Cambridge. However, the outbreak of war made it necessary to postpone the Congress and, consequently, there has been no international gathering of mathematicians since 1936. The Congress will be open to mathematicians of all national and geographical groups. The official languages will be English, French, German, Italian and Russian. Harvard University will be the principal host institution. A number of other institutions in metropolitan Boston will join in the entertainment of Congress visitors by arranging special features. Conferences will be concerned with several fields of research and there will also be a number of addresses by eminent mathematicians. In addition, Sectional meetings will be held on: I. Algebra and Theory of Numbers; II. Analysis; III. Geometry and Topology; IV. Probability and Statistics, Actuarial Science, Economics; V. Mathematical Physics and Applied Mathematics; VI. Logic and Philosophy; VII. History and Education. The Chairman of the Organizing Committee is Professor Garrett Birkhoff of Harvard University. Further information may be obtained from the American Mathematical Society, 531 West 116th Street, New York City, 27.

---

The University of Sheffield is planning to hold an exhibition of calculating machinery and equipment in the Firth Hall on Friday, 29th April, 1949, from 2.30 p.m. to 8.0 p.m., and Saturday, 30th April, 1949, from 10.0. a.m. to 6.0 p.m. It is expected that this exhibition will be of considerable interest to workers in education, commerce and industry. It will include as wide a range of equipment as possible, including : Hand and Electrically Operated Desk Calculators, Compto-

CC-0. In Public Domain. Gurukul Kangri Collection, Haridwar

Digitized by Arya Samaj Foundation Chennai and eGangotri


meters and Accounting Machines, Punched Card Machines and Equipment, Planimeters and Mechanical Integrators, Slide Rules and Logarithmic Calculators, Charts and Nomograms, Mathematical Tables, Machines of Historical Interest.

Two or three lectures on topics connected with machines and numerical work will be given during the course of the exhibition, one of these being of a popular nature. The Sheffield Group of the Industrial Applications Section of the Royal Statistical Society is co-operating in the organization of the exhibition. The Honorary Secretary to the Organizing Committee is Mr. G. H. Jowett. Fellows of the Society are invited to attend the exhibition.

---

The following extract from Mr. Winston Churchill's book, *The Second World War*, Vol. I, *The Gathering Storm*, will evoke nostalgic memories for a number of Fellows and will be of interest to all.

"One of the first steps I took on taking charge of the Admiralty and becoming a member of the War Cabinet was to form a statistical department of my own. For this purpose I relied on Professor Lindemann, my friend and confidant of so many years. Together we had formed our views and estimates about the whole story. I now installed him at the Admiralty with half-a-dozen statisticians and economists whom we could trust to pay no attention to anything but realities. This group of capable men, with access to all official information, was able, under Lindemann's guidance, to present me continually with tables and diagrams, illustrating the whole war as far as it came within our knowledge. They examined and analysed with relentless pertinacity all the departmental papers which were circulated to the War Cabinet, and also pursued all the inquiries which I wished to make myself.

At this time there was no general Government Statistical Organization. Each Department presented its tale on its own figures and data. The Air Ministry counted one way, the War Office another. The Ministry of Supply and the Board of Trade, though meaning the same thing, talked different dialects. This led sometimes to misunderstandings and waste of time when some point or other came to a crunch in the Cabinet. I had however from the beginning my own sure, steady source of information, every part of which was integrally related to all the rest. Although at first this covered only a portion of the field, it was most helpful to me in forming a just and comprehensible view of the innumerable facts and figures which flowed out upon us."

---

CC-0. In Public Domain. Gurukul Kangri Collection, Haridwar

Digitized by Arya Samaj Foundation Chennai and eGangotri



## STATISTICAL AND ECONOMIC ARTICLES IN RECENT PERIODICALS

UNITED KINGDOM—

*The Advancement of Science*—

*July* 1948—Modern methods of computation. Human factors in industry. Incentives.

*Annals of Eugenics*—

*April* 1948—The analysis of a tsetse-fly population: *C. H. N. Jackson.* The frequencies of the *ABO* blood-groups in south-western England: *J. Fraser Roberts.* A simple exact test for birth-order effect: *J. B. S. Haldane* and *C. A. B. Smith.* The problem of anticipation in pedigrees of dystrophia myotonica: *L. S. Penrose.* A characteristic of species of 7 × 7 Latin squares: *S. G. Ghurye.* Blood groups of Latvians, $A_1$ $A_2$ *BO*, *MN* and *Rh.*: *R. R. Race et al.* The effect of maternal age on the manifestation of a polydactyl gene in mice: *S. B. Holt.*

*The Banker*—

*June* 1948—The monetary factor in gilt-edged. Must Europe devalue? South Africa's hot money problem: *A Special Correspondent.* Canada tackles dollar crisis: *C. Gordon Tether.* Australia's balance of payments: *A Special Correspondent in Australia.* New Zealand resists inflation: *A Special Correspondent.*

*Biometrika*—

*May* 1948—James Fowler Tocher. On some modes of population growth leading to R. A. Fisher's logarithmic series distribution: *D. G. Kendall.* The studentized form of the extreme mean square test in the analysis of variance: *K. R. Nair.* The estimation of non-linear parameters by "internal least squares": *H. O. Hartley.* The geometrical method in the theory of sampling: *D. Fog.* Proofs of the distribution of the second order moment statistics: *J. Wishart.* Tests of significance in multivariate analysis: *C. R. Rao.* Alternative systems in the analysis of variance: *N. L. Johnson.* An examination and further development of a formula arising in the problem of comparing two mean values: *Alice A. Aspin.* On the power function of the longest run as a test for randomness in a sequence of alternatives: *G. Bateman.* Sur les courbes de fréquence de K. Pearson: *M. Dumas.* The distribution of the extreme deviate from the sample mean and its studentized form: *K. R. Nair.* The Fisher-Yates test of significance in 2 × 2 contingency tables: *D. J. Finney.* The power function of the test for the difference between two proportions in a 2 × 2 table: *P. B. Patnaik.* The analysis of contingency tables with groupings based on quantitative characters: *F. Yates.* The probability integral transformation when parameters are estimated from sample: *F. N. David* and *N. L. Johnson.* A table for the calculation of working probits and weights in probit analysis: *D. J. Finney* and *W. L. Stevens.* A note on the $\chi^2$ smooth test: *H. L. Seal.* Rank correlation and product-moment correlation: *P. A. P. Moran.* Tests of significance in the variate difference method: *N. L. Johnson.*

*British Journal of Psychology*—

*July* 1948—Internal and external factor analysis: *M. S. Bartlett.* Note on the relations of two weighted batteries: *Godfrey Thomson.* Prediction of a complex criterion and battery reliability: *E. A. Peel.* Factor analysis and canonical correlations: *Cyril Burt.* Flying ability and body-build: *Charlotte Banks.* The primary personality factors in women compared with those in men: *Raymond B. Cattell.*

*British Journal of Social Medicine*—

*January* 1948—A study of the incidence of disease in a whaling expedition to the Antarctic Pelagic Whaling Grounds, 1946–47: *R. A. M. Case.* Army experience of syphilis therapy: *C. C. M. James, D. G. Mackay* and *J. T. Wright.* Studies on puberty: *H. Hogben, J. A. H. Waterhouse* and *L. Hogben.*

*April* 1948—Bed-states in the Dominions: *R. Padley.* The Swedish bed-state: *G. Dalberg.* Returns of sickness from ships of the Royal Navy (1945–46): *J. A. Fraser Roberts.*

*Economica*—

*May* 1948—On the theory of the centrally administered economy: an analysis of the German experiment. Part I: *W. Eucken.* Financial policy and the balance of payments: *J. E. Meade.* On the valuation of social income—reflections on Professor Hicks' article. Part II: *S. Kuznets.* A review of the agricultural marketing schemes: *P. T. Bauer.*

CC-0. In Public Domain. Gurukul Kangri Collection, Haridwar

Digitized by Arya Samaj Foundation Chennai and eGangotri



*The Economic Journal*—

*June* 1948—International trade and the equalization of factor prices: *P. A. Samuelson.* The theory of games: *J. R. N. Stone.* The food subsidies: *A. C. Pigou.* The concerted regulation of price and output: *E. G. Dowdell.* A note on the working of rubber regulation: *T. H. Silcock.* The working of rubber regulation: a rejoinder: *P. T. Bauer.*

*The Eugenics Review*—

*July* 1948—On sex limitation in human genetics: *H. Harris.* Intelligence and size of family: *H. T. Himmelweit.*

*Lloyds Bank Review*—

*July* 1948—European union: *R. F. Harrod.* Contemporary Scandinavia: II—Main trends in Norway's economy: *W. Keilhau.* The Budget, overseas borrowing and domestic investment: *W. Manning Dacey.*

*The Manchester School of Economic and Social Studies*—

*May* 1948—The prospect before us: *W. A. Lewis.* Private enterprise and the theory of value: *T. Wilson.* The practice of economic planning: *R. C. Tress.* Some statistics of the industrial revolution in Britain: *T. S. Ashton.*

*Oxford University Institute of Statistics, Bulletin*—

*May* 1948—A family diet of low cost: *T. Schulz.* The increase in the working-class cost-of-living since before the war: *D. Seers.* The fall in consumption: *R. F. Harrod.* A note on further coal developments: *D. Seers.*

*June* 1948—The working-class share in pre-war consumption: *D. Seers.* The fall in consumption—a reply: *G. D. N. Worswick.* Comments on Mr. Harrod's paper: *E. F. Jackson.*

*Population Studies*—

*June* 1948—Recent developments in Swedish population policy: *H. Gille.* The growth of population in Palestine: *E. Bromberger.* Features of the demography of Palestine: *P. J. Loftus.* Social and economic consequences of the ageing of Western European populations: *A. Sauvy.* A bibliography of the demographic studies of Dr. R. R. Kuczynski.

*The Review of Economic Studies*—

Vol. XV (1), No. 37—Some aspects and generalizations of the theory of discrimination: *C. G. F. Simkin.* Tariffs and the terms of trade: *R. F. Kahn.* The concept of liquidity in international monetary theory: *H. W. Arndt.* Realism and relevance in consumer's surplus: *E. J. Mishan.* Professor Chamberlin and Mr. Smith on advertising: *T. H. Silcock.* Advertising costs and equilibrium: a reply: *H. Smith.* A note on the theory of rationing: *A. Henderson.* A note on exchange stability: *H. Field.*

*Statistical and Social Inquiry Society of Ireland, Journal*—

Vol. XVII—The function of marketing research in the distributive system: *D. Holmes.* Tuberculosis: a social survey: *W. C. Kidney.* The Industrial Relations Act, 1946: *R. J. P. Mortished.* Analysis showing the objects of expenditure and sources of revenue of Eire during financial years 1929–30, 1939–40 and 1945–46: *J. C. M. Eason.* Our dairying and cattle industries: *H. Kennedy.*

INDIA—

*Sankhyā*—

*June* 1948—On some analogues of the amount of information and their use in statistical estimation (concluded): *A. Bhattacharyya.* On the problem of similar regions: *M. N. Ghosh.* Use of well-known statistics in sequential analysis: *H. K. Nandi.* Table of monomial symmetric functions of weight 12 in terms of powers-sums: *S. M. Kerawala* and *A. R. Hanafi.* On the change in standard of living of the jute mill workers of Jagaddal between the years 1941 and 1945: *H. K. Chaturvedi* and *S. Bhattacharyya.* A note on the $D^2$-statistic when the variances and co-variances are known: *A. C. Das.* A note on ordered samples: *K. C. S. Pillai.* Alternative proof of the impossibility of the symmetrical design with $\lambda = 2$, $k = 7$: *Q. M. Hussain.* Structure of some incomplete block designs: *Q. M. Hussain.* A note on the selection of a site for a Ganges bridge in Bihar: *J. Singh.*

CC-0. In Public Domain. Gurukul Kangri Collection, Haridwar

Digitized by Arya Samaj Foundation Chennai and eGangotri



UNION OF SOUTH AFRICA—

*The South African Journal of Economics*—

*March* 1948—Some basic problems in housing research: *H. R. Burrows.* Competition in road motor transportation: *J. C. Laight.* Towards an austerity theory of value: *J. de V. Graaff.* European population movements in S.A. during World War II: *J. L. Sadie.* Keynes' influence on theory and public policy: *E. Kahn.*

UNITED STATES—

*American Academy of Political and Social Science, Annals*—

*May* 1948—Peace settlements of World War II. (Whole number.)

*American Economic Review*—

*May* 1948—Papers and proceedings of the sixtieth Annual Meeting of the American Economic Association.

*American Statistical Association, Journal*—

*March* 1948—Statistics and foreign policy: *W. L. Thorp.* History of the uses of modern sampling procedures: *F. F. Stephan.* The use of mark sensing in a large scale testing program: *W. L. Deemer, Jr.* A proposed basic course in statistics: *G. W. Snedecor.* Actuarial estimates for public sickness insurance plans: *A. M. Niessen.* Earnings of nonfarm employees in the U.S., 1890–1946: *S. Lebergott.* Direct determination of compass settings for proportionate area pie-charts: *H. Lasken.* Profile graphs: *J. V. Spielmans.* A method for obtaining and analyzing sensitivity data: *W. J. Dixon* and *A. M. Mood.* A short-cut method of fitting a logistic curve: *W. A. Spurr* and *D. R. Arnold.*

*Annals of Mathematical Statistics*—

*June* 1948—Discriminant functions with covariance: *W. G. Cochran* and *C. I. Bliss.* On the Kolmogorov-Smirnov theorems for empirical distributions: *W. Feller.* Application of recurrent series in renewal theory: *A. J. Lotka.* Solution of equations by interpolation: *W. M. Kincaid.* Estimation of a parameter when the number of unknown parameters increases indefinitely with the number of observations: *A. Wald.* Inversion formulae for the distribution of ratios: *J. Gurland.* The factorial approach to the weighing problem: *O. Kempthorne.* Multiple sampling for variables: *J. Silber.* On the characteristic functions of the distributions of estimates of various deviations in samples from a normal population: *M. Kac.* A functional equation for Wishart's distribution: *G. Rasch.* The distribution of a definite quadratic form: *H. Robbins.* Exact lower moments of order statistics in small samples from a normal distribution: *Howard L. Jones.* Note on an asymptotic expansion of the $n$th difference of zero: *L. C. Hsu.* An inequality for kurtosis: *L. Guttman.* Table for estimating the goodness of fit of empirical distributions: *N. Smirnov.*

*Biometrics*—

*December* 1947—On the estimation of biological populations: *D. B. de Lury.* Proceedings of the First International Biometric Conference.

*March* 1948—A quantitative theory of genetic recombination and chiasma formation: *R. A. Fisher.* La relation d'allométrie: sa signification statistique et biologique: *G. Teissier.* The general theory of prime power lattice designs: I. Introduction and designs for $p^n$ varieties in block of $p$ plots: *O. Kempthorne* and *W. T. Federer.*

*Harvard Business Review*—

*Jnly* 1948—To-day's real estate market: *R. H. Pease.* Mechanizing paper work: *R. B. McNeill.*

*Journal of Political Economy*—

*April* 1948—An experimental imperfect market: *E. H. Chamberlin.* Four reports on economic aid to Europe: *B. F. Hoselitz.* Postwar taxation in Japan: *H. Shavell.* The Supreme Court and the architects of economic legislation: *J. H. Stauss.* Supporting agricultural prices by concealed dumping: *T. W. Schultz.* How sound were private postwar forecasts?: *L. Barnes.*

*June* 1948—*Samuelson's Foundations of Economic Analysis*: The role of mathematics in economics: *K. E. Boulding.* Some locational factors in the iron and steel industry since the early nineteenth century: *W. Isard.* Some objections to marginal cost-pricing: *W. Vickrey.* The recession of 1937–38: *K. D. Roose.* Average-cost pricing and the theory of uncertainty: *W. Fellner.* The econometric approach: a critical analysis: *H. Grayson.*

CC-0. In Public Domain. Gurukul Kangri Collection, Haridwar

Digitized by Arya Samaj Foundation Chennai and eGangotri



*Milbank Memorial Fund Quarterly*—

*April* 1948—Medical services in New Zealand: *D. E. McHenry.* Social and psychological factors affecting fertility: VIII. The comparative influence on fertility of contraception and impairments of fecundity: *P. K. Whelpton* and *C. V. Kiser.*

*Quarterly Journal of Economics*—

*May* 1948—The concept of transfers in national income estimates: *E. R. Rolf.* The economic and political implications of a customs union: *C. Westrate.* John Law and John Keynes: *E. B. Wilson.* "Bargaining power" in price and wage determination: *C. E. Lindblom.* The interdependence of quality variations, selling effort and price: *H. Brems.* Technological change and the equilibrium level of the national income: *E. Ames* and *A. R. Ferguson.*

*The Review of Economics and Statistics*—

*May* 1948—Use of the consumption function in short run forecasting: *R. V. Rosa.* A statistical note on world demand for exports: *Tse Chun Chang.* Relation of agricultural pro duction to inputs: *G. T. Barton* and *M. R. Cooper.* On the meaning of full employment: *E. Benoit-Smullyan.* International commodity reserve standard reconsidered: *A. Rosensen.*

BELGIUM—

*Bulletin de l'Institut de Recherches Economiques et Sociales*—

*June* 1948—Le fait canadien français: *P. de Bie.* L'équipement ménager de familles ouvrières belges: *C. Leplae.* Problèmes belges d'information internationale: *R. de Ransart.* Les migrations saisonnières dans l'agriculture et les industries agricoles belges: *J. Mercier.* Niveaux et manifestations de culture chez les ouvriers de la grande industrie: *C. Lagasse.* Aspects de la démographie du Limbourg en rapport avec la découverte du bassin houiller de Campine: *C. F. Demeure.*

CZECHOSLOVAKIA—

*Statistický Obzor* (Czech text, Russian, English and French summaries)—

Vol. XXVIII, Part 2—On the methodology of ascertaining net and gross national income: *M. Stádník.* Application of the scheme Polya in ascertaining mistakes in psychological researches: *A. Kotzig.* Factor analysis: *V. Červinka.*

DENMARK—

*Nationaløkonomisk Tidsskrift*—

Part 1-2, 1948—The Netherlands-Belgian-Luxemburg Customs and Economic Union: *E. J. E. M. H. Jaspar.* Prispolitik og priskontrol efter krigen: *N. Banke.* Nationalbudgettet og vore økonomiske problemer: *V. Kampmann.* Nationaliseringen af Engelsk transportvaesen: *P. P. Sveistrup.* Den forventede renteudfikling: *H. Uldall-Hansen.*

FRANCE—

*Journal de la Société de Statistique de Paris*—

*May-June* 1948—Le progrès technique et l'évolution du capitalisme: *J. Fourastié.* Chronique des salaires: *J. Lehoulier.* Chronique des statistiques agricoles: *M. Augé-Laribé.* Variété: Sur l'ajustement des courbes à branches limitées: *S. Schneider.*

*Population*—

*January-March* 1948—Les conditions d'existence des familles. Les budgets familiaux en 1946: *A. Girard.* Une étude du budget-temps de la femme dans les agglomérations urbaines: *J. Stoetzel.* Influence respective de l'âge maternel et du rang de naissance sur la mortinatalité: La notion de l'étalité: *L. Tabah* and *J. Sutter.* La masculinité par age dans les recensements: *L. Henry.* La population des Etats-Unis d'Amérique: *W. S. Thompson.* La population de l'Inde: *P. Meile.*

*April-June* 1948—Préface à Moheau: *L. Chevalier.* Démographie potentielle et vieillissement de la population: *L. Hersch.* La reprise de la natalité dans le monde; ses causes, ses chances de durée: *A. Sauvy.* La mesure de la réproduction et de l'accroissement naturel: *H. Hyrenius.* Un nouvel indice de mesure de la fécondité: *J. Bourgeois-Pichat.*

CC-0. In Public Domain. Gurukul Kangri Collection, Haridwar

Digitized by Arya Samaj Foundation Chennai and eGangotri



Les divorces et les séparations de corps en France: *S. Ledermann.* L'accroissement futur des effectifs scolaires: *P. Vincent.* Les conditions d'existence des familles. • Dépenses et ration alimentaire en janvier-février 1948: *A. Girard.*

*Revue d'Économie Politique*—

*November-December* 1947—La France Économique de 1939 *à* 1946. (Whole Number).

*January-February*, 1948—Observations sur le problème de la rareté du dollar: *J. Tinbergen.* Les institutions économiques et sociales internationales. Le système monétaire de Bretton Woods et les grands problèmes de l'après guerre (Ire partie): *R. Mosse.* La notion d'ésperance marginale, la théorie générale de J. M. Keynes et le problème de l'intérêt: *P. Masse.*

HOLLAND—

*Statistica*—

Vol. 2, No. 3—Toevalscijfers: *H. C. Hamaker.* Een statistisch probleem in de klimatologie: *C. Levert.* Enkele frequentieverdelingen in de muziek: *J. H. C. Lisman.*

ITALY—

*Giornale degli Economisti e Annali di Economia*—

*May-June* 1948—Osservazione intorno a una teoria della pianificazione democratica: *G. di Nardi.* Un approccio alla teoria delle decisioni di comitato: *Duncan Black.* La matematica per economisti di Allen: *E. Zaccagnani.* La costruzione del mercato in genere nell' economia pura: *A. Macchioro.* Di una formula inadeguata per il benessere sociale: *M. de Luca.* Considerazioni sulla probabile entità delle riserve auree ufficiali dell' U.R.S.S.: *L. Chiavarelli.* Incompatabilità fra due leggi di economia aziendale: *C. Buonocore.*

*Rivista Italiana di Demografia e Statistica*—

*June* 1948—Le interpolazioni della Cantica dell'Inferno alla luce della Statistica: *R. Benini.* Sul valore mediale: *M. de Vergottini.* Di alcuni criteri statistici per l'analisi economica delle serio storiche: *S. Vianelli.* Sul concetto di concentrazione: *P. Battara.* Sguardo alla demografia della popolazione italiana dell'Eritrea, dal 1882 al 1923. Le rilevazioni della populazione fino al censimento del 1921: *V. Castellano.* La statistica e le libertà politiche: *U. Giusti.* Un procedimento per desumere la frequenza di morbilità per tubercolosi dalle osservazioni sui nuovi ammessi alle cure: *M. A. Coppini.* Il teorema dell' invarianza del birapporto e sua applicazione al calcolo dei parametri di talune curve interpolanti: *G. Chiassino.* I primi elementi della sociologia gumplowicziana: *F. Savorgnan.* Ultima replica sulla media aritmetica tipica: *M. Boldrini.*

MEXICO—

*Estadística*—

*March* 1948—Geography and cartography for census purposes in Latin America: *J. Zarur.* El papel futuro del IASI en las estadisticas internacionales: *H. L. Dunn.* Why a world census of agriculture in 1950: *R. H. Coats.* Anotaciones y experiencias sobre la standardización interamericana de las estadísticas del comercio internacional: *C. Procaccia.* The monthly report on the labor force: *E. D. Goldfield, J. Steinberg* and *E. H. Welch.* Promotion of birth registration among Indians: *J. N. Hadley.* Puntos de vista nacionales sobre los problemas de suministro de informaciones estadísticas a las organizaciones internacionales. Resolutions of the first session of the Inter-American Statistical Institute. Report of the sub-commission on statistical sampling to the Statistical Commission of the United Nations First Session 22–27 September, 1947.

SWEDEN—

*Ekonomisk Tidskrift*—

*March* 1948—En utvidgad inkomststatistik: *C-E. Quensel.* The inflationary gap: *R. Turvey.*

*June* 1948—Den optimale arbeidsinnats: *R. Frisch.* En note om inflationsgab og ligevaegtskonstruktioner: *B. Hansen.* Järnvägsekonomisk planering och forskning—ett vikigt hjälpmedel för företagspolitiken vid statens järnvägar: *A. Sjöberg.* Bemerkning til Keynes' "General Theory": *K. H. Borch.*

SWITZERLAND—

*Schweizerische Zeitschrift für Volkswirtschaft und Statistik*—

*April* 1948—Du déséquilibre intercontinental à propos du plan Marshall: *W. Rappard.* Rechnungsabschlüsse von Unternehmungen als Zahlenkollektiv: *L. V. Furlan.*

CC-0. In Public Domain. Gurukul Kangri Collection, Haridwar

Digitized by Arya Samaj Foundation Chennai and eGangotri



# REGISTRATION OF THE UNITED KINGDOM

## No. I.—ENGLAND AND WALES

BIRTHS, DEATHS, *and* MARRIAGES *registered in the Calendar years* 1943–1947 *and in the Quarters of those years. Numbers, Annual and Quarterly Rates* per* 1,000 *persons living. (Deaths under* 1 *year of age; rate per* 1,000 *Live Births registered in the same year. Stillbirths per* 1,000 *Births.)*

| Years | 1943 | | 1944 | | 1945 | | 1946† | | 1947† | |
|---|---|---|---|---|---|---|---|---|---|---|
| Estimated Mid-year Popln. in thousands‡ | 42,259 | | 42,449 | | 42,636 | | 42,700 | | 43,050 | |
| | Number | Rate | Number | Rate | Number | Rate | Number | Rate | Number | Rate |
| Live Births ... .. | 683,212† | *16·2* | 744,843† | *17·5* | 685,273 | *16·1* | 819,894 | *19·2* | 886,799 | *20·6* |
| Stillbirths ... ... | 21,275† | *30* | 21,212† | *28* | 19,452 | *28* | 22,915 | *27* | 21,916 | *24* |
| Deaths[1] ... ... ... | 501,412 | *11·9* | 492,176 | *11·6* | 488,108 | *11·4* | 492,090 | *11·5* | 517,613 | *12·0* |
| Marriages ... ... | 296,432 | *7·0* | 302,714 | *7·1* | 397,626 | *9·3* | 385,606 | *9·0* | 399,936 | *9·3* |
| Infant Mortality[2] ... | 33,431 | *49* | 33,455 | *45* | 31,959 | *47* | 33,548 | *41* | 36,851 | *42* |
| Effective reproductive rate[3] ... ... ... | *0·900* | | *0·996* | | *0·909* | | *1·111* | | *1·206* | |
| Quarters | Live Births in the Quarters of each Calendar Year | | | | | | | | | |
| Jan.–Mar. ... ... | 172,271 | *16·3* | 183,973 | *17·4* | 177,946 | *16·7* | 181,220 | *17·0* | 241,530 | *22·4* |
| Apr.–June ... ... | 180,709 | *17·1* | 199,039 | *18·9* | 175,221 | *16·5* | 203,808 | *19·1* | 235,174 | *21·9* |
| July–Sept. ... ... | 169,306 | *16·0* | 183,594 | *17·2* | 167,807 | *15·7* | 213,051 | *20·0* | 216,509 | *20·1* |
| Oct.–Dec. ... ... | 160,926 | *15·2* | 178,237 | *16·7* | 164,299 | *15·4* | 221,815 | *20·8* | 193,586 | *18·0* |
| | Stillbirths | | | | | | | | | |
| Jan.–Mar. ... ... | 5,783 | *32* | 5,587 | *29* | 5,190 | *28* | 5,202 | *28* | 6,347 | *26* |
| Apr.–June ... ... | 5,577 | *30* | 5,496 | *27* | 4,853 | *27* | 5,767 | *28* | 5,831 | *24* |
| July–Sept. ... ... | 4,980 | *29* | 5,018 | *27* | 4,676 | *27* | 5,831 | *27* | 5,073 | *23* |
| Oct.–Dec. ... .. | 4,935 | *30* | 5,111 | *28* | 4,732 | *28* | 6,115 | *27* | 4,665 | *24* |
| | Deaths[1] (excluding Stillbirths) | | | | | | | | | |
| Jan.–Mar. ... ... | 137,578 | *13·0* | 146,039 | *13·8* | 157,743 | *14·8* | 155,227 | *14·5* | 181,735 | *16·9* |
| Apr.–June ... ... | 112,911 | *10·7* | 115,548 | *10·9* | 110,972 | *10·4* | 113,908 | *10·7* | 118,011 | *11·0* |
| July–Sept. ... ... | 98,469 | *9·3* | 107,254 | *10·1* | 97,157 | *9·1* | 100,409 | *9·4* | 97,098 | *9·0* |
| Oct.–Dec. ... ... | 152,454 | *14·4* | 123,335 | *11·6* | 122,236 | *11·5* | 122,546 | *11·5* | 120,769 | *11·2* |
| | Marriages | | | | | | | | | |
| Jan.–Mar. ... ... | 62,684 | *5·9* | 62,879 | *5·9* | 76,975 | *7·2* | 78,237 | *7·3* | 74,820 | *7·0* |
| Apr.–June ... ... | 82,577 | *7·8* | 82,583 | *7·8* | 99,709 | *9·4* | 101,213 | *9·5* | 108,908 | *10·1* |
| July–Sept. ... ... | 81,569 | *7·7* | 82,312 | *7·7* | 119,447 | *11·2* | 109,750 | *10·3* | 119,015 | *11·0* |
| Oct.–Dec. ... ... | 69,602 | *6·6* | 74,940 | *7·0* | 101,495 | *9·5* | 96,406 | *9·0* | 97,193 | *9·0* |
| | Infant Mortality[2] | | | | | | | | | |
| Jan.–Mar. ... ... | 9,914 | *60* | 10,104 | *58* | 10,676 | *60* | 9,598 | *53* | 12,502 | *52* |
| Apr.–June ... ... | 8,028 | *46* | 7,936 | *43* | 7,227 | *41* | 7,624 | *37* | 9,157 | *39* |
| July–Sept. ... ... | 6,771 | *40* | 7,325 | *40* | 6,429 | *38* | 7,052 | *33* | 7,129 | *33* |
| Oct.–Dec. ... ... | 8,370 | *51* | 7,862 | *44* | 7,627 | *46* | 9,139 | *41* | 7,946 | *41* |

* All rates are based on the estimated population as at the middle of the corresponding year.

† Provisional figures.

‡ Inclusive of non-civilians of England and Wales temporarily abroad; and exclusive of non-civilians of Foreign Countries, Dominions, etc., temporarily in England and Wales.

[1] Including deaths of non-civilians registered in England and Wales.

[2] The annual figures have been corrected, so that slight differences appear between them and the aggregates of the quarterly figures.

[3] Based, not upon current but upon estimated future mortality.

CC-0. In Public Domain. Gurukul Kangri Collection, Haridwar

Digitized by Arya Samaj Foundation Chennai and eGangotri



## No. II.—SCOTLAND

BIRTHS, DEATHS, *and* MARRIAGES *registered in the Calendar years* 1943–1947 *and in the Quarters of those years. Numbers, Annual and Quarterly Rates* per* 1,000 *persons living. (Deaths under* 1 *year of age ; rate per* 1,000 *Live Births. Stillbirths per* 1,000 *Births.)*

| Years | 1943 | | 1944 | | 1945 | | 1946† | | 1947† | |
|---|---|---|---|---|---|---|---|---|---|---|
| Estimated Mid-year Popln. in thousands‡ | 4,662 | | 4,654 | | 4,674 | | 4,933 | | 5,139 | |
| | Number | Rate | Number | Rate | Number | Rate | Number | Rate | Number | Rate |
| Live Births ... ... | 94,682 | *18·4* | 95,941 | *18·5* | 86,932 | *16·9* | 104,406 | *20·3* | 113,147 | *22·0* |
| Stillbirths ... ... | 3,494 | *36* | 3,221 | *32* | 2,949 | *33* | 3,470 | *32* | 3,562 | *31* |
| Deaths [1] ... ... ... | 66,733 | *14* | 64,603 | *13·6* | 62,655 | *13·2* | 64,605 | *13·1* | 66,200 | *12·9* |
| Marriages ... ... | 38,177 | *7·4* | 37,017 | *7·2* | 48,728 | *9·4* | 45,831 | *8·9* | 44,406 | *8·6* |
| Infant Mortality ... | 6,174 | *65* | 6,237 | *65* | 4,889 | *56* | 5,621 | *54* | 6,309 | *56* |
| Quarters | Live Births in the Quarters of each Calendar Year | | | | | | | | | |
| Jan.–Mar. ... ... | 23,277 | *18·3* | 23,231 | *18·0* | 21,644 | *16·9* | 22,909 | *18·1* | 30,479 | *24·1* |
| Apr.–June ... ... | 25,439 | *19·8* | 25,618 | *19·9* | 22,579 | *17·6* | 25,849 | *20·2* | 30,366 | *23·7* |
| July–Sept. ... ... | 23,320 | *17·9* | 23,405 | *17·9* | 21,344 | *16·4* | 27,031 | *20·9* | 27,028 | *20·8* |
| Oct.–Dec. ... ... | 22,646 | *17·1* | 23,687 | *18·2* | 21,365 | *16·5* | 28,617 | *22·1* | 25,274 | *19·5* |
| | Stillbirths | | | | | | | | | |
| Jan.–Mar. ... ... | 940 | *39* | 816 | *34* | 746 | *33* | 808 | *34* | 1,020 | *32* |
| Apr.–June ... ... | 886 | *34* | 874 | *33* | 774 | *33* | 860 | *32* | 911 | *29* |
| July–Sept. ... ... | 825 | *34* | 751 | *31* | 671 | *30* | 850 | *30* | 853 | *31* |
| Oct.–Dec. ... ... | 843 | *36* | 780 | *32* | 758 | *34* | 952 | *32* | 778 | *30* |
| | Deaths[1] (excluding Stillbirths) | | | | | | | | | |
| Jan.–Mar. ... ... | 17,746 | *15·1* | 17,988 | *15·2* | 18,674 | *16·0* | 19,741 | *16·3* | 21,196 | *16·8* |
| Apr.–June ... ... | 15,874 | *13·3* | 15,288 | *12·9* | 15,364 | *13·0* | 15,185 | *12·2* | 15,654 | *12·2* |
| July–Sept. ... ... | 14,243 | *11·8* | 14,745 | *12·3* | 13,082 | *10·9* | 13,594 | *10·8* | 13,447 | *10·4* |
| Oct.–Dec. ... ... | 18,870 | *15·8* | 16,582 | *13·9* | 15,535 | *12·9* | 16,085 | *12·7* | 15,903 | *12·3* |
| | Marriages | | | | | | | | | |
| Jan.–Mar. ... ... | 9,267 | *7·2* | 9,020 | *7·0* | 9,764 | *7·6* | 9,981 | *7·9* | 9,505 | *7·5* |
| Apr.–June ... ... | 9,697 | *7·6* | 9,243 | *7·2* | 12,384 | *9·6* | 11,478 | *9·0* | 11,253 | *8·8* |
| July–Sept. ... ... | 10,203 | *7·9* | 9,847 | *7·6* | 13,646 | *10·5* | 12,851 | *9·9* | 12,762 | *9·8* |
| Oct.–Dec. ... ... | 9,010 | *7·0* | 8,907 | *6·8* | 12,934 | *10·0* | 11,521 | *8·9* | 10,886 | *8·4* |
| | Infant Mortality | | | | | | | | | |
| Jan.–Mar. ... ... | 1,756 | *75* | 1,756 | *76* | 1,465 | *68* | 1,579 | *69* | 1,915 | *63* |
| Apr.–June ... ... | 1,479 | *58* | 1,462 | *57* | 1,234 | *55* | 1,221 | *47* | 1,609 | *53* |
| July–Sept. ... ... | 1,283 | *55* | 1,510 | *65* | 979 | *46* | 1,222 | *45* | 1,353 | *50* |
| Oct.–Dec. ... ... | 1,656 | *73* | 1,509 | *64* | 1,211 | *57* | 1,599 | *56* | 1,432 | *57* |

* Death rates are based on civilian population and civilian deaths; births and marriage rates on total population (including persons in the forces).
† Provisional figures.
‡ Civilians only.
[1] Registered deaths, civilians and non-civilians.

CC-0. In Public Domain. Gurukul Kangri Collection, Haridwar

Digitized by Arya Samaj Foundation Chennai and eGangotri



## No. III.—NORTHERN IRELAND

BIRTHS, DEATHS, *and* MARRIAGES *registered in the Calendar years* 1943–1947 *and in the Quarters of those years. Numbers, Annual and Quarterly Rates* per* 1,000 *persons living. (Deaths under* 1 *year of age; rate per* 1,000 *Live Births.)*

| Years | 1943 | | 1944 | | 1945 | | 1946 | | 1947† | |
|---|---|---|---|---|---|---|---|---|---|---|
| Estimated Mid-year Popln. in thousands‡ | 1,304 | | 1,314 | | 1,320 | | 1,333 | | 1,342 | |
| | Number | Rate | Number | Rate | Number | Rate | Number | Rate | Number | Rate |
| Live Births ... ... | 31,521 | *24·2* | 30,900 | *23·5* | 29,007 | *22·0* | 30,134 | *22·6* | 31,254 | *23·3* |
| Stillbirths[1] ... ... | | | | | Not registered | | | | | |
| Deaths‡ ... ... | 17,437 | *13·4* | 16,791 | *12·8* | 16,264 | *12·3* | 16,666 | *12·5* | 16,914 | *12·6* |
| Marriages ... ... | 10,155 | *7·8* | 9,508 | *7·2* | 10,452 | *7·9* | 9,801 | *7·4* | 9,480 | *7·1* |
| Infant Mortality[2] ... | 2,464 | *78* | 2,083 | *67* | 1,975 | *68* | 1,626 | *54* | 1,658 | *53* |
| Quarters | Live Births in the Quarters of each Calendar Year | | | | | | | | | |
| Jan.–Mar. ... ... | 7,907 | *24·3* | 7,612 | *23·2* | 7,332 | *22·2* | 7,278 | *21·8* | 8,318 | *24·8* |
| Apr.–June ... ... | 8,695 | *26·7* | 8,312 | *25·3* | 7,509 | *22·8* | 7,924 | *23·8* | 8,539 | *25·5* |
| July–Sept. ... ... | 7,738 | *23·7* | 7,503 | *22·8* | 7,188 | *21·8* | 7,646 | *22·9* | 7,516 | *22·4* |
| Oct.–Dec. ... ... | 7,181 | *22·0* | 7,473 | *22·7* | 6,978 | *21·1* | 7,286 | *21·9* | 6,881 | *20·5* |
| | Deaths‡ (excluding Stillbirths) | | | | | | | | | |
| Jan.–Mar. ... ... | 4,890 | *15·0* | 5,108 | *15·5* | 5,249 | *15·9* | 5,435 | *16·3* | 5,902 | *17·6* |
| Apr.–June ... ... | 4,335 | *13·3* | 4,072 | *12·4* | 3,962 | *12·0* | 4,026 | *12·1* | 4,011 | *12·0* |
| July–Sept. ... ... | 3,642 | *11·2* | 3,483 | *10·6* | 3,339 | *10·1* | 3,280 | *9·8* | 3,277 | *9·8* |
| Oct.–Dec. ... ... | 4,570 | *14·0* | 4,128 | *12·6* | 3,714 | *11·3* | 3,925 | *11·8* | 3,724 | *11·1* |
| | Marriages | | | | | | | | | |
| Jan.–Mar. ... ... | 2,318 | *7·1* | 2,044 | *6·2* | 2,140 | *6·5* | 2,224 | *6·7* | 1,824 | *5·4* |
| Apr.–June ... ... | 2,628 | *8·1* | 2,532 | *7·7* | 2,806 | *8·5* | 2,509 | *7·5* | 2,500 | *7·5* |
| July–Sept. ... ... | 2,904 | *8·9* | 2,646 | *8·1* | 2,984 | *9·0* | 2,840 | *8·5* | 2,882 | *8·6* |
| Oct.–Dec. ... ... | 2,305 | *7·1* | 2,286 | *7·0* | 2,522 | *7·6* | 2,228 | *6·7* | 2,274 | *6·8* |
| | Infant Mortality[2] | | | | | | | | | |
| Jan.–Mar. ... ... | 676 | *85* | 650 | *85* | 700 | *95* | 464 | *64* | 497 | *60* |
| Apr.–June ... ... | 647 | *74* | 501 | *60* | 504 | *67* | 436 | *55* | 442 | *52* |
| July–Sept. ... ... | 589 | *76* | 420 | *56* | 384 | *53* | 331 | *43* | 314 | *42* |
| Oct.–Dec. ... ... | 546 | *76* | 508 | *68* | 382 | *55* | 388 | *53* | 405 | *59* |

* Rates are based on civilian population only.
† Provisional figures.
‡ Civilians only.
[1] Stillbirths are not registered in Northern Ireland. The birth of one living child and one stillborn, or one living child and two stillborn, is counted as one birth.
[2] The annual figures have been corrected, so that slight differences appear between them and the aggregates of the quarterly figures.

CC-0. In Public Domain. Gurukul Kangri Collection, Haridwar

Digitized by Arya Samaj Foundation Chennai and eGangotri



## No. IV.—EIRE

BIRTHS, DEATHS, *and* MARRIAGES *registered in the Calendar years* 1943–1947 *and in the Quarters of those years. Numbers, Annual and Quarterly Rates* per* 1,000 *persons living. (Deaths under* 1 *year of age; rate per* 1,000 *Live Births.)*

| Years | 1943 | | 1944 | | 1945 | | 1946 | | 1947† | |
|---|---|---|---|---|---|---|---|---|---|---|
| Estimated Mid-year Popln. in thousands | 2,946 | | 2,944 | | 2,983 | | 2,963 | | 2,972 | |
| | Number | Rate | Number | Rate | Number | Rate | Number | Rate | Number | Rate |
| Live Births ... ... | 64,375 | *21·9* | 65,425 | *22·2* | 66,861 | *22·4* | 67,922 | *22·9* | 68,602 | *23·1* |
| Stillbirths‡ ... ... | | | | | Not registered | | | | | |
| Deaths ... ... ... | 43,494 | *14·8* | 45,128 | *15·3* | 42,762 | *14·3* | 41,457 | *14·0* | 44,135 | *14·9* |
| Marriages ... .. | 17,328 | *5·9* | 16,772 | *5·7* | 17,301 | *5·8* | 17,525 | *5·9* | 16,300 | *5·5* |
| Infant Mortality ... | 5,319 | *83* | 5,198 | *79* | 4,739 | *71* | 4,390 | *65* | 4,597 | *67* |
| Quarters | Live Births in the Quarters of each Calendar Year | | | | | | | | | |
| Jan.–Mar. ... ... | 16,400 | *22·3* | 17,066 | *23·2* | 16,073 | *21·6* | 17,005 | *23·0* | 17,386 | *23·4* |
| Apr.–June ... ... | 16,916 | *23·0* | 17,663 | *24·0* | 17,940 | *24·1* | 18,122 | *24·5* | 18,807 | *25·3* |
| July–Sept. ... ... | 16,242 | *22·1* | 15,749 | *21·4* | 17,244 | *23·1* | 17,230 | *23·3* | 17,365 | *23·4* |
| Oct.–Dec. ... ... | 14,817 | *20·1* | 14,947 | *20·3* | 15,604 | *20·9* | 15,565 | *21·0* | 15,044 | *20·2* |
| | Deaths (excluding Stillbirths) | | | | | | | | | |
| Jan.–Mar. ... ... | 12,627 | *17·1* | 14,814 | *20·1* | 13,715 | *18·4* | 13,042 | *17·6* | 15,968 | *21·5* |
| Apr.–June ... ... | 10,974 | *14·9* | 11,074 | *15·0* | 10,754 | *14·4* | 10,515 | *14·2* | 11,167 | *15·0* |
| July–Sept. ... ... | 8,955 | *12·2* | 8,785 | *11·9* | 8,892 | *11·9* | 8,539 | *11·5* | 8,299 | *11·2* |
| Oct.–Dec. ... ... | 10,938 | *14·9* | 10,455 | *14·2* | 9,401 | *12·6* | 9,361 | *12·6* | 8,701 | *11·7* |
| | Marriages | | | | | | | | | |
| Jan.–Mar. ... .. | 4,548 | *6·2* | 4,222 | *5·7* | 3,697 | *5·0* | 4,478 | *6·0* | 3,839 | *5·2* |
| Apr.–June ... .. | 4,006 | *5·4* | 4,069 | *5·5* | 4,594 | *6·2* | 4,147 | *5·6* | 3,870 | *5·2* |
| July–Sept. ... .. | 5,132 | *7·0* | 4,599 | *6·2* | 4,928 | *6·6* | 5,161 | *7·0* | 4,947 | *6·7* |
| Oct.–Dec. ... ... | 3,642 | *4·9* | 3,882 | *5·3* | 4,082 | *5·5* | 3,739 | *5·0* | 3,644 | *4·9* |
| | Infant Mortality[1] | | | | | | | | | |
| Jan.–Mar. ... .. | 1,583 | *97* | 1,719 | *101* | 1,486 | *92* | 1,367 | *81* | 1,608 | *92* |
| Apr.–June ... .. | 1,304 | *77* | 1,241 | *70* | 1,097 | *61* | 1,020 | *57* | 1,217 | *65* |
| July–Sept. ... .. | 1,186 | *73* | 1,021 | *65* | 1,032 | *60* | 920 | *54* | 816 | *47* |
| Oct.–Dec. ... ... | 1,246 | *84* | 1,217 | *81* | 1,124 | *72* | 954 | *62* | 956 | *64* |

* Rates are based on the total estimated population as at the middle of the corresponding year.
† Provisional figures.
‡ Stillbirths are not registered in Eire. The birth of one living child and one stillborn, or one living child and two stillborn, is counted as one birth.
[1] The annual figures have been corrected, so that certain slight differences appear between them and the aggregates of the quarterly figures.



CC-0. In Public Domain. Gurukul Kangri Collection, Haridwar

Digitized by Arya Samaj Foundation Chennai and eGangotri

CC-0. In Public Domain. Gurukul Kangri Collection, Haridwar

Digitized by Arya Samaj Foundation Chennai and eGangotri

Vol. CXI.] [Part III.

# Journal of the Royal Statistical Society

SERIES A (GENERAL)

PART III, 1948

## The Validity of Comparative Experiments

By F. J. Anscombe

[Read before the Royal Statistical Society, March 16th, 1948, the President, Dr. David Heron, in the Chair].

### 1. *Introduction*

1.01. This paper arises from an attempt to answer the following question: how far is it possible to draw valid and incontrovertible conclusions from experiments conducted in a field of research (of which the classic example is agronomy) where observations are subject to erratic variation? Is there, in fact, a correct method of interpreting a given body of experimental evidence that will be accepted by all rational persons fully acquainted with the available facts as better than any other method? The question is suggested by the first chapter of R. A. Fisher's *The Design of Experiments*. This seems to assert that the drawing of conclusions from an experiment can be done in a perfectly sound manner, so as to be proof against criticism, if the experiment was properly conducted. The principle of experimentation enunciated by Fisher (1926) as permitting of the drawing of valid inferences is that of randomization.

1.02. My intention in this paper is twofold: to show as explicitly as possible what is the effect of randomization on the analysis of an experiment, and to make some observations on the sort of validity that is attainable in any scientific experimentation. The effect of randomization is considered in detail in sections 2 and 3. In section 4 precautions other than randomization that need to be taken to achieve validity are indicated. Rival systems of inductive inference are reviewed in section 5. The possible validity of experiments is considered in section 6.

1.03. I refer, for the most part, to what I have called "comparative" experiments. In many fields of experimentation we find this situation: that repeated observations of the same or similar events do not agree with one another exactly, and the experimenter cannot make the agreement perfect by taking any reasonable precautions to keep conditions constant; and that furthermore successive observations cannot be regarded as independent members of a probability distribution. In agricultural field trials, for example, the yields of neighbouring plots receiving similar treatments, or of the same plot receiving similar treatments in different years, are not equal, nor are they purely random uncorrelated variables with common parent distribution. Steps can be taken to reduce plot-to-plot variation, but it cannot be eliminated. Similarly, in industrial experimentation we find that successive articles produced by a machine are not identical, and that however much care is taken over the adjustment of the machine the variability in quality of output cannot be reduced beyond a certain point. Moreover, as the machine does not stay in the same state for long, even the average quality changes. This phenomenon of erratic variation will be referred to as *heterogeneity*.

1.04. In such circumstances, no very precise meaning can be attached to a statement of absolute performance, such as a statement of the mean yield from a particular variety of wheat grown in a certain way, or of the mean strength of an article manufactured by a certain process. It may happen; however, that although the absolute performance varies erratically the relative perfor-



CC-0. In Public Domain. Gurukul Kangri Collection, Haridwar

Digitized by Arya Samaj Foundation Chennai and eGangotri



mance of two treatments (or processes, or varieties, etc.) may be fairly consistent. It may be possible to state that in similar circumstances one treatment gives substantially better results than another, even when we cannot state at all exactly what results either will give.

1.05. In such fields of experimentation experiments are likely to be comparative, only secondary interest attaching to absolute performances. This is the type of experiment that will be considered here. The other main type of scientific experiment is concerned with determining absolute constants—as for instance the constants in a law of earthquake propagation, an example cited by Jeffreys (1939*a*). Although statistical problems may be involved in the interpretation of these experiments, there is no question of randomization, and this paper is largely irrelevant to them. An experiment such as one without controls to find whether a proposed method of inducing cancers in rats is effective, while not a determination of constants, is not comparative either, as its object is rough-and-ready. If any precise information were required on the reliability of alternative methods, the experiment would need to be comparative. We can say generally that an experiment either consists of a search for what are supposed to be absolute constants, or is comparative, at least if the field of research is sufficiently developed for rather fine effects to be of interest.

1.06. The validity of an experiment is an entirely separate quality from its sensitivity or efficiency. An experiment can be sensitive but not valid, as when there is some doubt as to what it tests. It may conversely be valid, i.e. a scrupulously fair comparison of specified things, but so insensitive that no useful result can emerge from it. Validity alone is under consideration here.

## 2. *The Analysis of Randomized Experiments*

2.01. Let us consider first the following simple experiment.

> *Expt.* 1. To compare two alternative manufacturing processes, $P$ and $Q$, $2n$ articles are selected, ready for application of the process in question, and numbered consecutively from 1 to $2n$. $n$ of them are chosen at random and given treatment $P$, and the other $n$ treatment $Q$. Afterwards they are reassembled into a single series of $2n$ articles in their original order, and they are finished and tested in that order.

2.02. The statistical treatment of the results of this experiment, a series of $2n$ observations, can be based wholly on the randomization. Let us consider first the test of the following null hypothesis.

> *Null hypothesis A.* There is no difference in the effect of the treatments, i.e. any particular article would have given the same test result if it had been treated by the other process.

On this hypothesis, the set of $2n$ observations has been divided merely at random into two sets of $n$ labelled $P$ and $Q$, and any other such subdivision would have been equally likely to occur. We can therefore test the hypothesis by selecting a criterion and comparing the value actually observed with the values derived from all the other possible subdivisions.

2.03. Suppose the observations are measurements of a continuous variable, say a time. Then we could test for a difference in mean time with the two treatments by counting how many of the re-arrangements of the aggregate of $2n$ readings into two sets of $n$ each would give a difference in mean time as great as or greater than that actually observed. Or we could consider the difference between the median times of the two sets of $n$ readings, or the difference in the mid-range times (i.e. arithmetic means of highest and lowest times in each set of $n$ readings), etc. All these tests would be correct tests of the null hypothesis, though which test would be the most useful to detect real changes in timing resulting from the different treatments would depend on the nature of the variability of the observations and on how large the differences were likely to be (as has been emphasized by Pearson, 1937).

2.04. Similarly we could compare dispersions by considering the ratio of the variance estimates from the two sets of readings, or the ratio (or difference) of the mean deviations, or of the ranges, etc. Other possible tests include the modified likelihood ratio test of Wolfowitz (1942). The

CC-0. In Public Domain. Gurukul Kangri Collection, Haridwar

Digitized by Arya Samaj Foundation Chennai and eGangotri



subject has been reviewed by Scheffé (1943). These "non-parametric" tests are independent, not only of the form of parent distribution, but of the existence of any such distribution.

2.05. If we assume that the effect of treatment $P$ as compared with treatment $Q$ is to add a constant amount $c$ to each observation, we can derive confidence limits for $c$ by subtracting any arbitrary value of $c$ from the readings for treatment $P$ and then testing the significance of the difference between the treatments as before. By trial and error we find values of $c$ such that the significance of the difference in times between the treatments, in either direction, has a chosen value. Any test of location can be used for this purpose, by arithmetic means, medians, etc.—which of them gives the shortest average confidence intervals depends on the nature of the variability of the observations.

2.06. The above statistical methods, based on a consideration of all possible relabellings of the observations, will be referred to as *randomization* methods. Two objections can be made to this approach. Firstly, the total number of relabellings to be considered may be far too large for practical enumeration. If in Experiment 1 $n = 25$, the number of possible arrangements exceeds $10^{14}$. Pitman (1937, 1938) and Welch (1937, 1938) have shown how randomization tests can be made approximately by calculating the first two or more moments of a randomization distribution and fitting a Pearson curve. In practice, however, recourse is had to the easier and more flexible methods derived from the theory of the normal distribution. We can test null hypothesis $A$ by normal-law theory if we postulate that the aggregate of $2n$ observations is a random sample from a normal distribution—not necessarily in the order in which the observations occurred, but as an aggregate. For by virtue of the randomization, the $P$ and $Q$ observations are independent random samples from the same normal distribution. Although we may without logical contradiction assert of any particular set of observations that it is a random sample from a distribution, if we do so our tests etc. will refer to parent distributions and not to the observations themselves. We know (§ 1.03) that parent distributions of the observations that can be sampled indefinitely often do not generally exist, so that some explanation is needed in introducing them.

2.07. But let us first consider the other objection to the above randomization methods. This is that null hypothesis $A$ and the definition of treatment effects implied in § 2.05 are too restrictive. We are interested to know how treatments $P$ and $Q$ compare in the long run. In order to test whether they differ in effect, must we really test whether they would have the same effect on each article? To estimate a difference in effects, must we suppose that the difference would be exactly the same for each article? Neyman (1935) has considered the following weaker null hypothesis.

> *Null hypothesis B.* If treatment $P$ had been applied to all $2n$ articles it would have given the same mean result as treatment $Q$ would have done.

Here it is admitted that the two treatments might give different results on any one article. A real treatment difference is defined in a corresponding way, as the difference in the mean result that would be obtained by either treatment applied to all $2n$ articles. (Neyman was, in fact, referring to agricultural experiments in randomized blocks and Latin squares only, but the analogous formulation for Experiment 1 is clear enough.) The approach proved difficult — witness McCarthy's treatment of randomized blocks (1939) — and led to an assertion that the Latin square design was biased.

2.08. If null hypothesis $A$ was unsatisfactory, surely null hypothesis $B$ is also unsatisfactory. Why must treatment effects be defined as an average over precisely the number of observations made in the experiment (or, in an agricultural experiment, as an average over precisely the area of ground used in the experiment)? Let us consider then the following hypothesis.

> *Null hypothesis C.* Treatments $P$ and $Q$ produce similar effects, in the sense that, given a sequence of observations, of indefinite extent, on articles made some with treatment $P$ and the rest with treatment $Q$ in an arbitrary alternation, no statistical test exists that can distinguish, or tend to distinguish, between the two treatments.

This hypothesis asserts that there is no kind of long-run difference of effect between the treatments, in mean value, spread, heterogeneity, or in any other way, and that the test-performance of any article is independent of the treatment applied to any other article.

CC-0. In Public Domain. Gurukul Kangri Collection, Haridwar

Digitized by Arya Samaj Foundation Chennai and eGangotri



2.09. Clearly, null hypothesis $C$ is satisfied if $A$ is satisfied. If we postulate any sort of distribution structure for the observations, hypothesis $C$ will be interpreted as an assertion that the distributions are the same for the two treatments. It has already been remarked that we cannot regard observations of successive articles made by one process as random members of a probability distribution. But it is often not unreasonable to suppose that each observation is a random member of a distribution and that the distribution itself may change from observation to observation. Let $F_i(x)$ be the distribution function of the reading $X_i$ that will be obtained at the $i$th observation in Experiment 1 if the article was given treatment $P$, and $G_i(x)$ the distribution function of the reading $Y_i$ that will be obtained if the article was given treatment $Q$. Then null hypothesis $C$ will be interpreted as asserting that $F_i(x) \equiv G_i(x)$ for all $i$. (By a distribution function is meant the chance that an observation will not exceed the value $x$.) We suppose that $X_i$ is statistically independent of $X_j$ and $Y_j$ for $i \neq j$.

2.10. Null hypothesis $C$ is incompatible with $B$, unless $A$ is also satisfied. This is obvious if we can suppose that $X_i$ and $Y_i$ have a joint probability distribution, for then $X_i - Y_i$ has a probability distribution, and is independent of $X_j - Y_j$ for $i \neq j$. Hypothesis $B$ asserts that $\sum_{i=1}^{2n} (X_i - Y_i) = 0$ certainly, so that $X_i = Y_i$ certainly, for all $i$. I have not attempted a formal proof without postulating the joint distribution, but it is intuitively clear that $C$ implies an independence of successive values of $X_i - Y_i$ which $B$ contradicts.

2.11. In this distribution structure, the instantaneous distributions $F_i(x)$ and $G_i(x)$ are not to be thought of as generated by some hypothetical repetition of observations under similar conditions (which would be difficult to define), but as a model giving rise to variability of the type observed. Clearly to postulate a different distribution for each observation is useless unless something can be assumed about the relation between successive distributions $F_i(x)$. We may assert simply that they are closely alike. A more definite postulate (alternative but very similar to the foregoing one) would be that the observations are drawn from a stochastic process of stated type. Null hypothesis $C$ would then be interpreted as an assertion that the process was the same for both treatments, $P$ and $Q$. The only "unreal" feature of these models is the simultaneous existence of $X_i$ and $Y_i$, when in fact only one of them can be observed.

2.12. A simple treatment difference is defined as a constant relation between $F_i(x)$ and $G_i(x)$, for every $i$, such as, for example, a constant difference in mean—or a corresponding simple difference between the two stochastic processes, if that is the model used.

2.13. The randomization methods given above in connexion with null hypothesis $A$ apply equally to null hypothesis $C$ with this model of instantaneous distributions. Thus the second objection to randomization methods (§ 2.07) is disposed of. If the observations are analysed by normal-law methods, a normal parent distribution, compounded of the instantaneous distributions, is fitted to the aggregate of observations of each treatment. If there is a constant relation between $F_i(x)$ and $G_i(x)$, due to a treatment difference, some similar relation will exist between the two fitted distributions, and if $F_i(x) = G_i(x)$ for all $i$, the fitted distributions will be the same. So much for the logic of making inferences about fictitious parent distributions. It remains to establish the accuracy of the analysis. The analysis would be exactly correct if we had $F_i(x) = F(x)$, the same for all $i$, and similarly $G_i(x) = G(x)$, and $F(x)$ and $G(x)$ were normal distribution functions, having (as we should usually suppose) equal variances. Inexactness arises from the instantaneous distributions not being normal and also from heterogeneity, i.e. differences between successive instantaneous distributions, other than the differences that the treatments are supposed to cause. The effect of departures from ideal conditions has been investigated by many writers, though much yet remains to be done. Cochran (1947) has given a good review of the present position, and Bartlett (1947*a*) has reviewed the use of transformations to bring data within the scope of normal-law theory. Only a few supplementary remarks will be made here.

2.14. Two different lines of approach are open, in investigating the accuracy of normal-law methods. We may first formulate a definite distribution model for the observations, and determine theoretically or by some sampling technique how the sampling distributions of test criteria ($z$, $t$, etc.) compare with those given by normal-law theory. This has been the approach of Pearson (1931), Bartlett (1935), and Geary (1936). See also the Appendix to this paper. The argument

CC-0. In Public Domain. Gurukul Kangri Collection, Haridwar

Digitized by Arya Samaj Foundation Chennai and eGangotri



would be completed if we could show that the models considered adequately represented the departures from ideal conditions encountered in practice, but this is no light task, and appears not to have been seriously attempted.

2.15. Alternatively, particular sets of observational data can be taken and the randomization distribution of test criteria worked out. This has been done by Eden and Yates (1933), Welch (1937), and Hey (1938). To complete the argument, it would be necessary to consider a large number of typical sets of data, and this again is no light task, involving both extensive uniformity trials and heavy computing. For any one experiment, a randomization test need not agree exactly with one based on normal-law theory, even if the ideal conditions for the latter do in fact hold. Both tests will then be correct (though the normal-theory one will be the more efficient). They will agree to the extent that the randomization distribution would average out to that given by normal-law theory if all possible sets of observations were considered. Thus a divergence between the randomization distribution of a test criterion obtained from a particular body of data and the normal-theory distribution does not necessarily imply that normal-law theory is inappropriate to the data.

2.16. The following proposition is perhaps worth stating. It suggests that the conditions under which a normal-law analysis holds exactly are not likely ever to be exactly fulfilled in practice.

> *Theorem.* On the null hypothesis ($C$), the analysis of Experiment 1 by the methods of normal-law theory will be exactly correct if and only if the $2n$ observations are a (possibly non-random) re-arrangement of a sample from a normal distribution.

Here, as elsewhere in this paper, a normal-law analysis of some data means the estimation of treatment effects, analysis of variance, and use of $t$ and $z$ distributions, as described by Fisher (1935*a*) and Yates (1937). A "non-random re-arrangement" of a sample could be, for example, an arrangement in ascending order of magnitude. The condition is intended to imply that the observations in aggregate have statistical properties identical with those of a random sample from a normal distribution. There are other ways in which such samples can arise, in addition to straightforward sampling of a normal distribution; as remarked in the Appendix, a single observation from a multi-dimensional normal distribution with the same joint distribution of all pairs of variables has the property here referred to.

2.17. That the condition is sufficient is obvious. If by the analysis being correct is meant that the two sets of $n$ observations, for treatments $P$ and $Q$, shall be random independent samples of the same normal distribution, then the necessity of the condition is also obvious. If, on the other hand, all that is implied is that the ratio of the observed difference in means to its standard error shall follow the $t$ distribution, the theorem goes deeper. As Eisenhart (1947) has remarked about some similar theorems, "[the conditions] may be necessary in the mathematical sense, but no proof of this is known to the writer. For a variety of reasons he believes them to be 'necessary in practice' in the sense that, if there are exceptions, the circumstances required would be regarded by the practical man as 'pathological'."

2.18. Let us now consider the analysis of Experiment 1 when the observations are not of a continuous variable but of a dichotomy: does the article function correctly or fail when tested? The observations can be set out in a table as follows.

| *Treatments* \ *Number of articles* | Failed | Correct | Total |
|---|---|---|---|
| $P$ | $r_1$ | $n - r_1$ | $n$ |
| $Q$ | $r_2$ | $n - r_2$ | $n$ |
| Total | $r_1 + r_2$ | $2n - r_1 - r_2$ | $2n$ |

The observations give us $r_1$ and $r_2$, $n$ being chosen in advance. The randomization test of the null hypothesis, that the $r_1 + r_2$ failures have been distributed randomly between the treatments

CC-0. In Public Domain. Gurukul Kangri Collection, Haridwar

Digitized by Arya Samaj Foundation Chennai and eGangotri



$P$ and $Q$, is the test of a $2 \times 2$ table with fixed marginal totals given in Fisher's *Statistical Methods*, section 21.02. Yates (1934) and Fisher (1935*b*) postulated parent distributions in deriving the test, but that is unnecessary. The test can be approximated by a $\chi^2$ test with continuity correction.

2.19. If now we follow the course adopted for continuous variables and postulate that, on the null hypothesis, the aggregate of $2n$ observations is a random sample of a probability distribution, then by virtue of the randomization the two sets of $P$ and $Q$ observations are random independent samples from the same distribution, which we can express alternatively by saying that $r_1$ and $r_2$ are independent observations from a binomial distribution with total number $n$. It is now possible to test the null hypothesis, against the counter-hypothesis that $r_1$ and $r_2$ are independent observations from different binomial distributions (with total number $n$), by Barnard's test (1947). The subject is considered further below (§§ 5.07–09).

2.20. The above discussion of Experiment 1 applies, with obvious modifications, to any randomized experiment. Let us consider a few special points that arise with more complicated designs, beginning with an experiment in randomized blocks.

> *Expt.* 2. In an agricultural experiment $r$ treatments are to be compared on $rs$ plots. The plots are arranged in $s$ blocks of $r$ plots, and the $r$ treatments are applied one to each plot of a block at random. Observations are taken of the eventual yields of the plots.

2.21. As regards randomization tests, we can test a null hypothesis that there is no difference between two of the treatments (no assumption being made about the others) by subtracting the two yields in each block and considering all possible allocations of $+$ and $-$ signs to these differences. Fisher gives an example (1935*a*, section 21). A test of the null hypothesis that all $r$ treatments are similar in effect can be made by calculating the ratio of treatments variance with $r - 1$ degrees of freedom to residual variance with $(r - 1)(s - 1)$ degrees of freedom, as in an ordinary analysis of variance, and considering its distribution under all possible re-arrangements of treatments in each block. An approximate form of this test has been given by Pitman (1938) and Welch (1937). They show, incidentally, that the expected values, under randomization, of the treatment and residual mean squares are equal, and therefore equal under any distribution structure, on the null hypothesis. The same is true, of course, for Experiment 1. Hence one of the principal reasons adduced for randomizing, that it permits of an unbiased estimate of error (Yates, 1933, 1939*a*).

2.22. When using normal-law theory to compare treatment effects, supposed to be simple differences in means, we assume not only that we can fit normal distributions with the same variance to each treatment, but also that the variance is the same from block to block. The proposition corresponding to that of § 2.16—for what it is worth—would run: on the null hypothesis, the usual normal-law analysis of Experiment 2 is exactly correct if and only if the yields in each block are a (possibly non-random) re-arrangement of a sample from a normal distribution, all $s$ distributions having the same variance. As before, the necessity of the condition is unproved.

2.23. Let us take now a Latin square design.

> *Expt.* 3. $r$ treatments are compared, with $r$ plots of each, in a block of plots arranged in an $r \times r$ rectangular array, so that each treatment occurs once in each row and once in each column. The arrangement of the treatments is chosen at random from some class of possible arrangements. Observations are of yields.

2.24. We shall consider three possible classes of Latin square arrangements that can be selected from:—firstly, the class $\alpha$ of all $r \times r$ Latin squares that can be derived from some one such square by permutation of rows and columns; secondly, the class $\beta$, known as a transformation set, of all $r \times r$ Latin squares derivable from some one square by permutation of rows, columns, and treatments; thirdly, the class $\gamma$ of all possible $r \times r$ Latin squares. Fisher & Yates (1943) have recommended that in Latin square experiments the design should be taken at random from $\gamma$ if $r \leqslant 6$, and at random from some transformation set $\beta$ if $r \geqslant 7$, since the transformation sets of the $7 \times 7$ squares are inconveniently many, while the larger squares are as yet unenumerated.

2.25. Whatever class of squares is used, randomization tests are theoretically possible, as in Experiments 1 and 2. Welch (1937) has given the first two moments of the randomization distribu-

CC-0. In Public Domain. Gurukul Kangri Collection, Haridwar

Digitized by Arya Samaj Foundation Chennai and eGangotri



tion of the ratio of treatment sum of squares, with $r - 1$ degrees of freedom, to total of treatment and error sums of squares, of $(r - 1)^2$ degrees of freedom, on the null hypothesis that all $r$ treatments have similar effects. It is here immaterial whether classes $\alpha$ or $\beta$ are used, because the test involves all the treatments symmetrically. Results for class $\gamma$ are got by a summation over all the distinct $\beta$ classes composing $\gamma$. The first moment of the distribution is $1/(r - 1)$, and the error estimate is unbiased—as had been shown already by Yates (1933) under the more general condition of randomization merely of all rows except the first. The second moment depends on the class of squares selected from.

2.26. Welch's numerical work suggested that the Latin square design may be more sensitive than randomized blocks to departures from ideal conditions, when given the usual normal-law analysis. For reasons given above (§ 2.15), the case is far from proved. The same conclusion is also suggested by the following analogue of the proposition of § 2.16:—analysis of Experiment 3 by normal-law theory will be exactly correct, on the null hypothesis, if the $r \times r$ table of yields can be regarded as having been derived by a possibly non-random permutation of rows and columns from an $r \times r$ array of quantities, such that each quantity is independently drawn from a normal probability distribution with a constant variance and with a mean that can be expressed as the sum of two components, one constant for all members of the same row and the other constant for all members of the same column. The condition is more stringent than that required for Experiment 2. The condition is clearly sufficient, provided the Latin square arrangement used in the experiment has been selected from a class $\alpha$ (or sum of such classes); there is no need to stipulate that a class $\beta$ or the total class $\gamma$ was used. I suppose that the condition is also necessary, whichever class, $\alpha$, $\beta$, or $\gamma$, has been used.

2.27. Another matter still unsettled is whether there is any advantage in selecting the Latin square arrangement from one class of possible squares rather than another. The relevant facts seem to be as follows.

(i) Classes $\beta$ and $\gamma$ give unbiased treatment comparisons, because of the randomization over treatments. As to class $\alpha$, in which rows and columns but not treatments are randomized, it is not difficult to show that by permutation of rows and columns a given Latin square can be transformed so that any two of the treatments are interchanged. Thus class $\alpha$ gives unbiased differences between pairs of treatments. Since, however, it is just as easy to use class $\beta$ as $\alpha$, $\beta$ is to be preferred.

(ii) If it is intended to use an exact randomization test (i.e. actually enumerating the re-arrangements), $\gamma$ is to be preferred to $\beta$ when $r = 4$, since then the two possible $\beta$ classes are too small to give useful significance levels—not that $\gamma$ is much better. For $r \geqslant 5$ no $\beta$ class is as small as this, and any one may be used alone. The size of $\beta$ class has no obvious bearing on the validity of a normal-law analysis.

(iii) Welch's numerical work suggested that when $r \geqslant 5$ it makes very little difference which $\beta$ class is used, and so whether $\gamma$ is used instead of $\beta$. Further work along the same lines would be useful, as Welch himself remarked. Meanwhile, the question whether, for any value of $r$, one transformation set $\beta$ is to be preferred to another, or the class of all squares $\gamma$ is to be preferred to any $\beta$, seems to be entirely open, when analysis by normal-law methods is intended.

(iv) If the $\beta$ classes differ in effect (as regards the accuracy of normal-law analysis), the risk of error in using $\gamma$ cannot exceed and may be less than the average risk in using an arbitrary $\beta$, and even if the errors peculiar to the several $\beta$ classes do not cancel one another in $\gamma$ we may still prefer a certain risk of error to an uncertain risk of greater error. Hence, in our present state of ignorance, it seems reasonable to recommend that $\gamma$ should be used when possible.

## 3. *General Remarks on Randomization*

3.01. The arrangement or ordering in which the type of design (i.e. the combinatorial features of the design, described as randomized blocks, Latin square, etc.) is realized in an experiment will be referred to as the *order* of the experiment. Randomizing the order can affect the possibility of analysis in two ways. Firstly, if the order has been selected at random from some class of possible orders such that all re-arrangements of treatments amongst themselves are equally frequent, the experiment must give unbiased mean treatment effects; and without making any

CC-0. In Public Domain. Gurukul Kangri Collection, Haridwar

Digitized by Arya Samaj Foundation Chennai and eGangotri



significance tests or analysis of errors within single experiments, a sequence of similar experiments can be analysed. Thus if there are two treatments $P$ and $Q$, each experiment will give an estimate of the mean difference between $P$ and $Q$. By virtue of the randomization, the difference might equally well have had the opposite sign, on the null hypothesis, and the interpretation of the sequence of experiments proceeds, either with an exact randomization test or approximately using any appropriate distribution theory. Yates (1939*a*) has emphasized that when one systematic design is used in a series of experiments it is essential that the allocation of treatments to the sets of plots receiving the same treatment should be random in each experiment.

3.02. Secondly, under certain conditions the fact that the order of an experiment has been selected at random from a class of possible orders can be used to test the results of the experiment by itself. If there is a statistic (i.e. function of the observations and the order of the experiment) that takes on a reasonably large number of different values when the observations are considered in relation to all orders of the class (of which only one was the actual one), the statistic can be used for significance testing and to estimate treatment differences. When an exact randomization test is to be used, as in § 2.03 above, there is no need to stipulate that the order of the experiment was selected from the class of all possible orders, but merely from some reasonably large set of orders. But as soon as an approximate form of the randomization test is intended (working with moments of the statistic, in the manner indicated by Pitman & Welch), or a distribution structure is to be superimposed on the observations, it seems that the class of orders selected from must consist of all possible permtutaions, of a stated kind, of one or more basic orders. For example, the classes $\alpha$ and $\beta$ considered above in Experiment 3 consist of all possible permutations, of two different kinds, of a single basic order; and it seems that any restriction of these classes by omission of particular orders would involve the danger of vitiating normal-law tests (though not vitiating an exact randomization test).

3.03. The point is mentioned, because in some fields of experimentation (not all) we expect *a priori* that if there is any appreciable heterogeneity in the experiment it is more likely to be of one sort than another. In agricultural experiments we expect the yields of neighbouring plots to be positively correlated; in experiments on industrial processes we expect the performance of articles produced successively to be positively correlated. We can often say that we do not expect the observations to have a periodic component, though we cannot rule out the possibility absolutely. Then some possible orders are more likely to indicate a difference between treatments when none exists than other better-balanced orders. The risk of any considerable effect of this kind can be reduced by dividing the experiment into smaller blocks, using Latin square arrangements, etc., but such devices generally involve loss of information if in fact the heterogeneity that is feared is absent. Their use will therefore be governed by the amount of heterogeneity that is expected, rather than by the amount that might conceivably occur. The point is not of practical importance unless the experiment is rather small; for with a large experiment the chance that a random order will be markedly unbalanced is negligible.

3.04. We may say that the purpose of randomization is that we should be able to ignore the nature of the heterogeneity of an experiment. It neutralizes the incidence of factors whose incidence is independent of the treatments.

3.05. So far the word "random" has not been defined. We call an order "random" if we believe it has been derived by a procedure of sampling from a known distribution, such that all the possible orders have the same probability of being selected. The randomness of the order depends entirely on the way in which it was derived, and not at all on what it is. Or perhaps one should say, the randomness of the order depends on our idea of the way the order was derived.

3.06. Random orders can be obtained if and only if there is any known probability distribution that can actually be sampled indefinitely often. Various elaborate attempts have been made to obtain random samples from the distribution of ten equiprobable digits, and specimen tables of random numbers have been published. The actual method adopted in randomizing an experiment will be an approximation to an ideal process. It is possible to find fault with it, just as it is possible to find fault at any other stage of the conduct and interpretation of the experiment. We may make use of a published table of random numbers. Granted that the table was obtained by a perfectly random process, its use many times over may be queried. The number

CC-0. In Public Domain. Gurukul Kangri Collection, Haridwar

Digitized by Arya Samaj Foundation Chennai and eGangotri



of random orders that we are supposed to be selecting from in a "complex" agricultural experiment may be somewhere between $10^{10}$ and $10^{50}$, but the number of orders for such an experiment that could be derived from the largest of the published tables of random numbers (Kendall & Babington Smith, 1939), used in the simple way in which the table would ordinarily be used for this purpose, probably does not exceed $10^5$, and we may be sure that even these orders are not equally likely to be selected. Or, as is sometimes easier for large experiments, we may do our own randomizing by shuffling numbered cards. Here we encounter the notorious difficulty of good shuffling. These objections do not appear to me to carry any more weight than would, say, objections to the use in any circumstances of normal-law methods of analysis. Both sorts of objection are next to impossible to refute.

## 4. *Other Conditions for Validity*

4.01. We have considered some of the principles underlying the analysis of a comparative experiment, the analysis leading to certain estimates and statements of significance. Let us turn to the relevance of these estimates and tests to the questions that the experiment was designed to throw light on. Randomization alone does not ensure relevance. Two important precautions may be mentioned: the circumstances in which the treatments are tested should be well chosen, and care must be taken over the definition of the treatments themselves.

4.02. We may expect in general that there will be interactions between the treatments under test in the experiment and other factors that may not be under test, and we must see that these other factors have values or states representative of the conditions to which we shall be applying the results of the experiment. If it were desired to compare two clockwork mechanisms, in order to know their relative behaviour in a hot climate, it might be totally misleading to test them in cold conditions; for their relative efficiency might then be reversed. Frequently we are interested in establishing some general relation between the treatments, under a range of conditions. For this purpose a single simple experiment is of little value. We may test the treatments factorially with other factors known to be important (if these are under control in the experiment), and we may repeat the experiment at different times and places.

4.03. Consider, for example, a multiple experiment to compare two treatments $P$ and $Q$, consisting of a trial of the design of Experiment 1 carried out independently on $s$ different days. Days and treatments can be regarded formally as two factors, with $s$ and 2 levels respectively, combined as in a factorial experiment; but we are not interested in the main comparison between days. If an analysis of variance is made, the three terms of interest are

| | *Degrees of freedom* |
|---|---|
| (i) Between treatments . . . | 1 |
| (ii) Treatments × days . . . | $s - 1$ |
| (iii) Residual error . . . . | $2s(n - 1)$ |

Let us suppose that $s$ is large and $n \geqslant 2$, so that terms (ii) and (iii) have a large number of degrees of freedom. Then if we compare (i) or the sum of (i) and (ii) against (iii), we are testing a null hypothesis that the two treatments always have similar effects, while if we test (i) against (ii) we are testing another null hypothesis, that the processes do not differ consistently in effect from one day to another. (There is an exactly parallel choice if we use randomization tests; for we may consider a random reallocation of $P$s and $Q$s in each day's set of $2n$ observations, or we may consider the random assignment of a + or − sign to the observed mean difference between $P$ and $Q$ on each of the $s$ days.) There would be further possible tests of consistency in the $P$-$Q$ comparison if the design of the experiment had included in addition, say, a comparison between years or between places. The subject has been discussed by Yates and Cochran (1938). Ideally, we should like to carry out an extensive series of trials under a random (or stratified random) selection of the conditions to which we wish to apply the results of the experiment, but this is usually impossible. For example, even the broadest co-operative agricultural experiment is limited in its ultimate validity by the fact that only farmers willing to co-operate have co-operated. Thus in the analysis of a series of similar experiments carried out under a variety of conditions, difficulties

CC-0. In Public Domain. Gurukul Kangri Collection, Haridwar

Digitized by Arya Samaj Foundation Chennai and eGangotri



of interpretation that lurk in the simplest of experiments become obvious. The fact that several alternative valid tests can be made leads us to enquire whether any one of them is really to the point.

4.04. A rather different situation arises with experiments on perennial crops, when observations are taken in successive years on the same plots. Suppose the design is as in Experiment 2, the same treatments being applied each year. In general, it would be incorrect to use the treatments × years interaction as an error term in making a comparison of treatments, since there is no re-randomization of plots each year. Each plot gives rise to a series of yearly yields, and these may first of all be transformed into a mean, a linear regression coefficient, and quadratic, cubic, etc., components. The experiment may be analysed as if it were a one-year experiment, using any one of the quantities obtained per plot, e.g. mean yield over the years; and the error term always has $(r-1)(s-1)$ degrees of freedom, independently of the number of years. Or the mean and all regression coefficients per plot can be subjected simultaneously to a multivariate analysis, such as Bartlett has described (1947*b*). We cannot use the sort of analysis mentioned in the preceding paragraph, i.e. treating the yearly replications as if they were independent, unless we make some assumption concerning the relative effects of different plots in successive years, such as that plot differences can be represented by additive constants independent of year. Similar considerations apply to rotation experiments—see Cochran (1939).

4.05. In a simple randomized-blocks experiment with several replications, the error term is formally the interaction of treatments and blocks, and therefore it tests consistency of the treatment effects from block to block. With more complicated designs the error may be estimated differently. In an experiment with several factors, some "dummy" comparisons, and two replications in different blocks, we might use an error term made up of three components: (1) pure intra-block error, i.e. the dummy comparisons within a block, (2) interactions between the factors under test and the blocks, and (3) some high-order interactions between the factors under test. If some comparisons have been confounded with blocks, we have formally a fractional replication of treatments and blocks, and there will be components of error with alternative interpretations as (2) or (3). In using such composite error estimates we assume that the interaction effects in (2) and (3) are small, so that we should have obtained much the same estimate if all our information had been of type (2). The assumption can be checked from past experience, as in a recent investigation by Kempthorne (1947).

4.06. As to the definition of the treatments, it is of course necessary that the specification of the treatments should be met with reasonable accuracy. There may be considerable difficulty in this. Consider an experiment to compare two alternative processes in the manufacture of an article, i.e. to decide whether it would be advantageous if a factory changed over from process $P$ now in use to a new process $Q$. It may be that the efficiency of the processes depends greatly on the skill of the operatives, and for several reasons a trial run with process $Q$ may not give a fair estimate of how process $Q$ would turn out if adopted for normal production. If, for example, the factory is interested in making the change in process and wishes to persuade a customer that the quality of output will not be lowered, it is to be expected that the most skilled operatives will be used in the trial run of process $Q$, and conditions will be quite other than those of routine production. On the other hand, if process $Q$ is not well understood at the outset, difficulties may be encountered with it that would be overcome if it were adopted for production, and it may not do itself justice in the trial.

4.07. Yates (1939*a*) has mentioned a somewhat similar effect that may occur in an agricultural experiment. In a variety trial the varieties may differ in earliness. If the field is attacked by birds, one variety may be much more heavily damaged than another. This may not imply that the first variety is in general more liable to bird damage than the other; if the bird attack had come at a slightly different time the damage might have been reversed.

## 5. *Rival Systems of Inference*

5.01. So far the principles of statistical analysis have not been discussed. There are several systems of inference in use at the present time, and a few remarks on them may be useful before I attempt to draw some general conclusions on the validity of experiments. I shall accordingly review briefly the systems of H. Jeffreys, R. A. Fisher, and J. Neyman and E. S. Pearson.

CC-0. In Public Domain. Gurukul Kangri Collection, Haridwar

Digitized by Arya Samaj Foundation Chennai and eGangotri



5.02. Jeffreys' *Theory of Probability* (1939*b*) is concerned with measures of rational belief in propositions. The theory is developed from some axioms (of which one is that rational belief in propositions can be ordered and expressed as a one-dimensional real number) together with some conventions (such as that entailed propositions have probability 1). In general the probability of a proposition alters when fresh evidence is supplied, but it is possible for the data to include a complete specification of the probability law and for the results of previous trials to be irrelevant to the result of a new trial. Such probabilities are referred to by Jeffreys as "chances", and are what have been referred to above as "probabilities". Chances satisfy the law of large numbers. Inferences concerning hypotheses are made with Bayes' Theorem, balancing prior probabilities against observational evidence. In a significance test a particular hypothesis $H$ (to which a positive prior probability is attached, such as $\frac{1}{2}$) is compared with a range of alternative hypotheses (between which the remaining prior probability is distributed), and the posterior probabilities of $H$ and not-$H$ are compared. In an estimation problem the prior probability is distributed over the alternative hypotheses without special weight being given to any one, and the hypothesis with greatest posterior probability is selected; with large samples the method is practically that of maximum likelihood. Special attention has been paid to the correct assigning of prior probabilities when there is no definite prior information, the prior probability distribution then being a formal assertion of ignorance.

5.03. In the statistical theory of Neyman and Pearson (see Kendall, 1946, and references there given) all probabilities are interpretable as frequencies, being what Jeffreys calls chances—however they may initially be defined, as set functions or by collectives. The concept of probability is only used when the idea of random sampling from a parent universe seems relevant, and generally speaking no meaning is attached to the probability of a hypothesis being true (on the grounds that it either is or is not true in any particular case, and does not have a frequency of being true). In a significance test we compare what has been observed with what would be observed in repeat experiments if some hypothesis $H$ is true. The possible results of the experiment are divided into two classes, "significant" and "not significant", such that if $H$ is true there is a known small chance of getting a significant result, and if any of certain alternative hypotheses is true the chance is larger. Considering a set of "significant" regions with diminishing chances on $H$, each containing the following ones, we can attach a precise level of significance to any observed result. In interval estimation of an unknown parameter, confidence limits for the parameter are calculated from the data by a certain rule, which has the property that an assertion that the parameter lies between the limits will be true with a known frequency if the rule is applied regularly to similar sets of data (and if some underlying postulate concerning the nature of the parent distribution of the observations is true). All analysis of experimental material is thus deductive, and aims at presenting the evidence contained in the data in a readily assimilable form. It takes no account of prior probabilities and does not explicitly indicate what judgments should be made.

5.04. Fisher's statistical theory occupies an intermediate position. Probabilities with the same frequency interpretation as in the Neyman-Pearson theory are used, and also other concepts, likelihood, level of significance, and fiducial probability, which are derived from frequencies but are not of the same nature. Prior probabilities are ignored, and the analysis aims at revealing the information contained in the data only. The analysis is not purely deductive, but involves rules of thought, as Yates (1939*b*) has clearly shown. In a significance test we compare what has been observed with what might have been observed if some hypothesis is true; and we consider not necessarily all possible alternative observations but perhaps only a subset of them. Uniqueness is attained (if it is) by stipulating that when possible sufficient or quasi-sufficient statistics should be used—or, more generally, that all the available information must be used. *Cf.* Bartlett (1937): "In order for the variation in the sample $S$ to be independent of irrelevant unknowns $\varphi$, a sufficient set of statistics $U$ must exist for $\varphi$. All exact tests of significance which are to be independent of $\varphi$ must be based on the calculable *conditional variation* of the sample $S \mid U$. We may in fact state as a general principle that *all exact tests of composite hypotheses are equivalent to tests of simple hypotheses for conditional samples.*" (Bartlett also recognized (1940) that such exact tests may not be the most efficient.) In interval estimation of an unknown parameter, fiducial limits are calculated between which it is reasonable to suppose that the parameter lies.

CC-0. In Public Domain. Gurukul Kangri Collection, Haridwar

Digitized by Arya Samaj Foundation Chennai and eGangotri



They must be derived by some method that completely exhausts the information available in the sample, in particular from the distribution of a sufficient statistic, if one exists, or by integration from the simultaneous distribution of a set of statistics jointly sufficient for the required parameter and other unknown parameters, if such a set exists. When exhaustive estimation is impossible, interval estimation is not attempted. Thus significance levels and fiducial probabilities are measures of rational belief, derived by conventional rules from frequency-probabilities. Whether they are themselves the frequency with which certain events would occur in repeat experiments is considered to be irrelevant (Fisher, 1945), though such frequencies have often been referred to (e.g. in *Statistical Methods*, § 12).

5.05. The difference between the three systems has been well illustrated in the discussion of the Behrens-Fisher test (Fisher, 1935*c*, 1941, Bartlett, 1939, Jeffreys, 1940, Neyman, 1941, Welch, 1947). It may be useful to consider here the application of the three systems to the problem of § 2.18 above. We shall suppose, as in § 2.19, that the $P$ and $Q$ observations are drawn independently from binomial distributions with probabilities $p_1$ and $p_2$, and we wish to test the hypothesis $p_1 = p_2$ against $p_1 \neq p_2$.

5.06. In Jeffreys' solution (1939*b*, §§ 5.31–33), the prior probabilities must first be specified. If there is no prior knowledge, a probability of $\frac{1}{2}$ is allotted to the hypothesis $p_1 = p_2$, and the remaining probability of $\frac{1}{2}$ is distributed over the range of unequal values of $p_1$ and $p_2$. The ratio of posterior probabilities is then found (approximately). If the ratio is considerably greater than 1 the hypothesis $p_1 = p_2$ is accepted as true, if considerably less than 1 we accept $p_1 \neq p_2$.

5.07. With Fisher's theory, we note that $r_1$ and $r_2$ are jointly sufficient for estimating $p_1$ and $p_2$. On the null hypothesis that $p_1 = p_2 = p$, the distributions involve $p$, but $r_1 + r_2 = R$ is a sufficient statistic for $p$. Hence $r_1$, given $R$, is quasi-sufficient to detect a difference between $p_1$ and $p_2$. Thus Fisher compares the actual observations with the set of all possible observations having the same value of $R$ (and the same $n$, of course), and reaches the "randomization" test already mentioned in § 2.18. As with all significance tests, Fisher's test gives somewhat different numerical results from Jeffreys'. Owing to the discreteness of the distributions, results significant at any given level, say the 5 per cent. level, will occur in repeated experiments less often than on 5 per cent. of occasions, if the null hypothesis is true; for $R$ will not in fact be constant from experiment to experiment. The test is therefore not exact in the Neyman-Pearson sense. It can be made exact in that sense by the following device. Suppose $r_1 < r_2$. Then the level of significance attached to the difference between $r_1$ and $r_2$ on Fisher's theory is given by the sum of the first $r_1 + 1$ terms of the hypergeometric series

$$\frac{n!\,(2n-R)!}{(2n)!\,(n-R)!}\left\{1 + \frac{nR}{1!\,(n-R+1)} + \frac{n\,(n-1)\,R\,(R-1)}{2!\,(n-R+1)(n-R+2)} + \ldots\right\},$$

which we shall denote by $\theta(r_1)$, for a single-tailed test, or twice this amount for a two-tailed test. Let $\alpha$ be an observation from a rectangular distribution in (0, 1). Then if $\theta(r_1)$ is replaced by

$$\alpha\,\theta\,(r_1) + (1-\alpha)\,\theta\,(r_1 - 1)$$

we shall have a significance level satisfying the Neyman-Pearson frequency requirement. Here, if $r_1 = 0$, $\theta(-1)$ is interpreted as 0. As the chance of obtaining a significant result (at any given nominal significance level) is always greater for this test than for Fisher's, whether or not the null hypothesis is true, the test is more powerful than Fisher's in the Neyman-Pearson sense.

5.08. A test involving a random sampling experiment, so that the same observations would not always be given the same significance, may seem repulsive. Barnard's test (1947) meets the problem satisfactorily (from the Neyman-Pearson point of view) using significance levels controlled by inequalities. The test can be approximated by an ordinary $\chi^2$ test without continuity correction (Hoel, 1945, Pearson, 1947). Barnard's test definitely presupposes that we are sampling from a binomial population. If that assumption is not made (and the random-sampling test just described is rejected), the test of § 2.18 may be used, regarding the calculated significance level as a bound, and not the true value, of the actual level.

5.09. In section 2 above, where it has been necessary to imply a distinctive point of view, the Neyman-Pearson has been meant. Randomization tests of the null hypothesis are always correct on Fisher's theory, if no information concerning parent distributions is available. They are also

CC-0. In Public Domain. Gurukul Kangri Collection, Haridwar

Digitized by Arya Samaj Foundation Chennai and eGangotri



valid on the Neyman-Pearson theory when the observed variables are continuous, though discrete variables introduce inequalities, as just explained. The interval estimation of § 2.05 is valid on the Neyman-Pearson theory; and I presume it is valid also on Fisher's theory in the absence of information concerning parent distributions, on the ground that although there is no sufficient statistic none is conceivable and such information as there is has been used fully. I believe Jeffreys would make neither tests nor estimations without further information concerning the distribution of the observations and the alternatives to the null hypothesis.

5.10. Jeffreys' theory of probability is a proper theory of induction. Its use is beset by a number of difficulties, theoretical and practical. There is first of all the sheer mathematical difficulty of coping with arbitrary distributions of prior probability. The specification of prior probabilities to denote ignorance has naturally been considered first, for reasons of simplicity, but in fact it is highly unusual for an experiment to be conducted without some prior knowledge or expectation of the result, and the case of complete ignorance should be merely a stepping stone in the development of the theory. The special virtue of a theory of rational belief is surely that it can take account of even the vaguest prior knowledge. Some such knowledge generally exists even when a hypothesis is first propounded by an experimenter, before it has been tested; since some conceivable results of an experiment carried out to test it would be classed by him as "reasonable" or expected, and others as utterly unlikely. (*Cf.* Jeffreys, 1939*b*, § 1.4.)

5.11. More interesting are the difficulties that occur when an experiment gives an unexpected result. Dingle (1937), in pointing out that the process of verifying a statement is rational, not empirical, remarks: "If an empirical attempt were made to verify the statement, 'The atomic weight of carbon is 12', and a value, 56, were found, the statement would not be regarded as falsified. The experiment would be rejected as, for some reason, invalid, even though no error were detected in it. We should continue to regard the statement as true because the assumption of an undetected error would best correlate the experiment with previous experiments".

5.12. This is an extreme case, but illustrates an always-possible contingency. When an unexpected result occurs we do two things. We examine the experiment to detect mistakes, and we reconsider the prior probabilities. Prior probabilities may be assessed rather carelessly, as life is too short for much effort in that direction, and there is a temptation to wait till the unexpected happens before considering whether it is really incompatible with previous knowledge. There is an analogy here with the laying down of standards of acceptance and rejection in the routine inspection of a manufactured product; it may be easier to consider what should be done with a run of production of poor quality when it has occurred, than to lay down in advance (and keep up to date) definite rules for acceptance or rejection. But if prior probabilities are assessed *a posteriori*, and perhaps not altogether impartially, the reasoning process has become rather complicated.

5.13. And the fact that the care with which we scrutinize an experiment for mistakes depends on the expectedness of the observations also indicates a complication of the simple process, prior probability—observations—posterior probability, of Jeffreys' theory. In any case, the detection of mistakes or other causes of irrelevance is largely fortuitous. We may notice accidentally that measurements have been rounded off more severely than the instructions stipulated, we may notice an obviously incorrect measurement. Some such accident may perhaps lead to the discovery that in some respect the experiment did not go according to plan, and must be rejected. We never know for certain that our observations are what we intended them to be, or that they have the statistical properties that we expect. It has often been emphasized that unless the method of analysis of an experiment is decided on in advance, significance tests may be falsified, as any set of data will show a significant effect if enough tests are tried. Although this is quite true, it must not be taken too much to heart. In an agricultural experiment, if one of the treatments leads to complete failure of crop, we cannot ignore this fact in analysing the observations, since zero yields have not the same statistical properties as ordinary positive yields. The decision that an analysis assuming normal distributions and equal variances is appropriate is based not only on (1) experience of similar past observations and (2) possible theoretical knowledge of causes of variability, but also on (3) inspection of the observations themselves.

5.14. Philosophers have devoted much attention to "the problem of induction". It has been shown (Broad, 1944) that no inferences can be made from a particular set of observations to a

CC-0. In Public Domain. Gurukul Kangri Collection, Haridwar

Digitized by Arya Samaj Foundation Chennai and eGangotri



general proposition without a postulate that the observations are in some way a fair sample of the class of possible observations to which the general proposition refers. We must suppose that the observations are "a random sample" or some sort of representative sample. In interpreting an experiment we therefore have to consider both whether this postulate of relevance is applicable and, supposing it is, how the experiment confirms or defines the general proposition that we are interested in. It appears to me that Jeffreys' theory deals with the second process, but not with the first.

5.15. Granted that the postulate of relevance can be made, it is then possible to "prove the principle of induction", for any reasonable method of induction, by demonstrating a law of large numbers. That is, we show that if a class of possible observations has some statistical property and we can take representative samples we shall in due course come to believe that the property, or something very close to it, is true. But there is more to the problem of induction than this. It is an empirical fact that trained observers will, in some circumstances, agree that from a body of data a certain general proposition should be inferred as true, and so taken as a working hypothesis until further evidence shows it needs modification. Any given method of induction, i.e. system of rules for making inferences, could in principle be investigated experimentally (inductively, as in any other experimentation, and hoping that eventually there would be general agreement as to the interpretation) by experimental psychologists, to see how it compared with the intuitive methods of induction used by most scientists. The implications of different methods of induction, when followed consistently, need also to be compared. These questions appear to me to form the most interesting part of the " problem of induction".

5.16. Let us turn now to the Neyman-Pearson system of inference. As has already been remarked, the mathematical theory is deductive only. So far as I am aware, no writer of this school has described how inferences should be made. The matter is left to intuition. There seems actually to be a current belief that all induction can be presented as deduction. To illustrate this, and also to forestall a possible line of attack on § 3.05 above, I quote a remark by Kendall (1941): "In statistical work we require one thing above all in a 'random' selection; namely, that if continued long enough it shall draw all members of the universe equally often, or at least in a known proportion. In fact, it is not the haphazard quality of randomness that we use in drawing inferences from random samples, but the only thing about it which is not haphazard, namely its property of producing definite limits. (I am, of course, speaking colloquially.) Any method of selection would serve equally well if it satisfied this primary requisite." This is perhaps the only property of a random sequence required for the Neyman-Pearson deductive analysis, but before we draw any inferences we desire the extra piece of information that any one order is as likely as any other to have been chosen. (It would be truer to say that all deduction involves induction. Even a mathematical proof or calculation has an inductive aspect, namely its correctness. If the working was heavy, the possibility that such checks as the author has been able to apply have failed to detect all errors is not only conceivable but serious.)

5.17. Fisher's theory likewise gives no account of the complete process of induction. Furthermore, it suffers from not having been propounded axiomatically, with existence and uniqueness theorems, so that it is difficult to understand. For example, the statement (Fisher, 1936) that exact fiducial limits cannot be supplied for a binomial frequency seems to conflict with later accounts of fiducial probability. What Fisher & Yates (1943, Table VIII-1) describe as "limits for the probability of an event" are referred to by Finney (1947) as "fiducial limits", in both cases without any imputation of inexactness. There seems to have been an initial confusion with confidence limits. It appears that exact confidence limits cannot be supplied unless we use the sampling device mentioned in § 5.07 above. (Let $\theta(r, p)$ denote the sum of the first $r + 1$ terms of the binomial expansion of

$$(q + p)^n,$$

where $q = 1 - p$, $r = 0, 1, 2, \ldots n$, and $\theta(-1, p)$ is interpreted as 0. If $r$ successes are observed out of $n$ trials, we derive an upper confidence limit $p'$ (at significance level $\varepsilon$) to the unknown probability $p$ of successes by taking an observation $\alpha$ from the uniform distribution in (0, 1) and solving the following equation for $p'$:

$$\alpha\,\theta(r, p') + (1 - \alpha)\,\theta(r - 1, p') = \varepsilon.$$

CC-0. In Public Domain. Gurukul Kangri Collection, Haridwar

Digitized by Arya Samaj Foundation Chennai and eGangotri



For the left-hand side is a decreasing function of $p'$ (given $\alpha$ and $r$), and so $p' < p$ if

$$\alpha\,\theta\,(r, p) + (1 - \alpha)\,\theta\,(r - 1, p) < \varepsilon.$$

But here the left-hand side, for fixed $p$ and random $r$ and $\alpha$, is a random variable uniformly distributed in (0, 1). Hence $p' < p$ with probability $\varepsilon$.)

## 6. *The Validity of Experiments*

6.01. Karl Pearson wrote (1892): "The scientific man has above all things to strive at self-elimination in his judgments, to provide an argument which is true for each individual mind as for his own." "Above all things" might be disputed, but no doubt there is a core of truth in the remark.

6.02. Let us ask, then, under what conditions will we as spectators accept the inferences that someone else has drawn from his experiment. If the Neyman-Pearson system of inference is used, the process of interpretation can be analysed as follows. We have first a record of the observations, i.e. the entries in the notebook, labelled according to their position in the design, together with information (which could be a written statement) as to how the experiment was conducted. We supply some postulates asserting that the observations are random samples of some kind from a probability distribution. The distribution will not be completely specified, but may contain adjustable constants, or perhaps two or more alternative forms of distribution are considered (the variants being known as hypotheses). It is convenient to refer to these postulates as "the statistical postulates"; they include any mathematical theory that the experiment was designed to test. We now carry out the deductive process known as "the statistical analysis". Next we must supply a set of postulates of a different kind, incorporating our views on the following subjects:—

(1) the competence and veracity of the experimenter, i.e. was the experiment in fact carried out as stated?

(2) the fairness of the experiment as an investigation of the points at issue (the postulate of relevance of § 5.14),

(3) the reasonableness of the statistical postulates, i.e. are we likely to be misled seriously if we accept them?

It is convenient to refer to these as "the semantic postulates". We also take into consideration our prior knowledge (which may merely be analogy), representing all available evidence on the points at issue other than what is contained in the record of observations. From the statistical analysis of the experiment, the semantic postulates, and the prior knowledge, we derive by an inductive process our "inferences" and decide on any necessary action. The whole process can be set out as in the diagram. The diagram describes logical connexions, and is not intended to suggest the time-order of the thought processes.

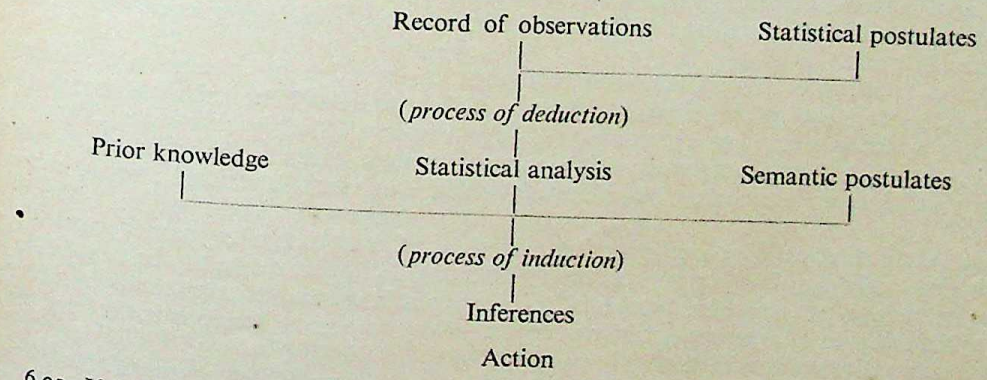


6.03. If Jeffreys' system of inference is used, the mathematical stage of the process of inference involves the prior knowledge (or rather a mathematical representation of it) as well as the

CC-0. In Public Domain. Gurukul Kangri Collection, Haridwar

Digitized by Arya Samaj Foundation Chennai and eGangotri



statistical postulates, but there is still in addition an intuitive stage in which semantic postulates are considered. Similarly, if the experiment were designed, in the manner of a sequential sampling scheme, to give a definite decision on some question, although the experiment itself appears to entail the inference to be made semantic considerations are still involved in our acceptance of this inference.

6.04. We shall accept someone else's inferences if we agree with him concerning the semantic postulates, the prior information, and the whole method of induction by which the inferences are made—or rather, a failure to agree may lead us to interpret the experiment differently. Clearly, there is scope for disagreement. The interpretation of any limited body of data requires judgment, and it is possible for two competent and intelligent persons, both apparently possessed of the same evidence on the points at issue (but not of course equally competent, intelligent, unprejudiced, and experienced in scientific method) to attach different importance to various features of the case and so reach different conclusions.

6.05. An experiment can serve two quite different purposes. It may be required for an immediate administrative decision, that must be taken however indefinite the result of the experiment. Or it may aim at the advancement of scientific knowledge, no immediate action being contemplated (other than perhaps the planning of further experiments). Let us consider experiments of the latter sort.

6.06. The "complete process of adding to natural knowledge by experimentation" comprises repetitions of the following sequence: (*a*) formulation or reconsideration of theories, in the light of available evidence, (*b*) formulation of hypotheses that can be tested or investigated experimentally, to confirm the theories, or make them more precise, or distinguish between alternative theories, (*c*) conduct of experiments. An experiment can only answer questions of certain types, namely those which require a simple yes or no (significance tests) or values for specified unknown quantities (estimation). If the subject of experimentation is "how is a certain virus disease spread in potato crops, and what precautionary measures can be taken?", the individual experiments must set out to answer questions such as "how long does an insect vector remain infective after feeding on a diseased plant?" or "does a plant's resistance depend on manurial treatment?"

6.07. If a scientific theory is important, it will be tested many times, more or less indirectly, by different workers. It is this unlimited repetition and checking that gives science such impersonal validity as it possesses. Let us see how it affects the stages in the interpretation of an experiment mentioned above.

6.08. Concerning the first semantic postulate we may reflect that not all experimenters will be liars, and if some are incompetent in any respect others will hasten to expose them. Since none can prove us wrong, we may hold it as an article of faith that truth will prevail. Obviously, however, the speed with which truth does prevail, if not the ultimate outcome, depends much on freedom of speech and criticism.

6.09. In the second and third semantic postulates we call on knowledge of the nature of the experimental material. Such knowledge accumulates in a series of experiments, and if it is discovered that an unsound assumption was made in interpreting some early experiments a reinterpretation can be made.

6.10. As to the prior information and the method of induction, these concern the mental processes by which we make inferences. Serious differences of opinion arise only when the available evidence is scanty or contradictory. We can re-word Karl Pearson's remark quoted above by saying that an experimenter endeavours to amass so much evidence for his theories that the part played in interpreting the evidence by personal judgment is whittled away to almost nothing.

6.11. When the object of an experiment is an administrative decision only, there is no question of impersonal validity. The person who has to make the decision arranges the best experiment he can, and makes what decision he thinks fit. He is not interested (or supposes he is not) in whether his methods of experimentation are certain to lead to correct decisions in the long run, or any considerations of that kind.

6.12. The Neyman-Pearson deductive analysis is clearly appropriate to experiments whose purpose is scientific research, for it refers always to the frequency with which some event will be observed in repeat experiments, and such a consideration is relevant. The method may be used

CC-0. In Public Domain. Gurukul Kangri Collection, Haridwar

Digitized by Arya Samaj Foundation Chennai and eGangotri



in reaching administrative decisions, but is then not obviously suitable. Conversely, Jeffreys' system of measuring our right-minded reaction to each new piece of evidence aims directly at guiding any decisions that have to be taken. In face of very strong evidence its personal quality (balance of evidence against *a priori* probabilities) almost vanishes, and it approaches the impersonal Neyman-Pearson method (and any other tolerable method of induction).

6.13. Similarly, the usefulness of the device of randomization in comparative experiments depends on the object of the experimentation. If the experimental material is such that we know nothing of the nature of its heterogeneity, there can be no disadvantage in randomizing save only the trouble involved. For the administrative-decision type of experiment it is immaterial what order is used, while for the scientific-research type the experiment should be randomized unless the trouble involved is prohibitive. But in many fields of research we feel that some types of heterogeneity are more likely than others, and that some orders are better "balanced" than others. When the sole object of the experiment is an administrative decision, a balanced (systematic) design may be most suitable, since such experiments often aim at estimating some effect as accurately as possible, without a precise significance test. When the experiment has some long-term importance, randomization (coupled with a deductive Neyman-Pearson analysis) enables the results of the experiment to be presented as objectively as possible, so that the number of assumptions and judgments that have to be made in interpreting it is minimized. In interpreting any single experiment we are at liberty to take into consideration any opinion we may have of the balance of the random order that was actually chosen, discounting some apparent treatment effect if it can be plausibly attributed to an accident of randomization. But we ignore such opinions when considering an extensive series of experiments, the object of the randomization being precisely that we should be able to ignore them. In the terminology of §6.02, the randomization affects the second and third semantic postulates, giving us some positive grounds for asserting that the experiment and its analysis are fair.

6.14. Randomization confers certain advantages. In some fields of experimentation we may consider these advantages so important that we should reject a non-randomized experiment as invalid (for the purpose of scientific research). This, however, is a matter of judgment. If we used a non-randomized design and in our analysis made a definite postulate concerning the heterogeneity of the experiment, such as that the observations were drawn from a stationary stochastic process of given type, we should not have introduced any invalidity into the experiment of a sort different from what is there in any case. So far as I know, methods of analysis appropriate to stochastic-process postulates have not yet been worked out.

*Acknowledgments*

I am much indebted to the many persons with whom I have discussed this subject. I should like particularly to acknowledge the most helpful suggestions and criticisms that I have had from Professor M. S. Bartlett, Dr J. O. Irwin, Mr D. G. Kendall, and Dr F. Yates. Perhaps it is not superfluous to add that I am very greatly indebted to the authors whose work I have consulted, and not least to those with whom I have eventually found myself in disagreement.

*References*

Barnard, G. A. (1947), "Significance tests for 2 × 2 tables," *Biometrika*, **34**, 123.
Bartlett, M. S. (1935), "The effect of non-normality on the *t* distribution," *Proc. Camb. Phil. Soc.*, **31**, 223.
—— (1937), "Properties of sufficiency and statistical tests," *Proc. Roy. Soc.*, A, **160**, 268.
—— (1939), "Complete simultaneous fiducial distributions," *Ann. Math. Statist.*, **10**, 129.
—— (1940), "A note on the interpretation of quasi-sufficiency," *Biometrika*, **31**, 391.
—— (1947*a*), "The use of transformations," *Biometrics*, **3**, 39.
—— (1947*b*), "Multivariate analysis," *Suppl. J. R. Statist. Soc.*, **9**, 176.
Broad, C. D. (1944), "Hr von Wright on the logic of induction," *Mind*, **53**, 1, 97, 193.
Cochran, W. G. (1939), "Long-term agricultural experiments," *Suppl. J. R. Statist. Soc.*, **6**, 104.
—— (1947), "Some consequences when the assumptions for the analysis of variance are not satisfied," *Biometrics*, **3**, 22.
Daniels, H. E. (1938), "The effect of departures from ideal conditions other than non-normality on the *t* and *z* tests of significance," *Proc. Camb. Phil. Soc.*, **34**, 321.
Dingle, H. (1937), *Through Science to Philosophy*. Oxford U.P.
Eden, T., & Yates, F. (1933), "On the validity of Fisher's *z* test when applied to an actual example of non-normal data," *J. Agric. Sci.*, **23**, 6.



CC-0. In Public Domain. Gurukul Kangri Collection, Haridwar

Digitized by Arya Samaj Foundation Chennai and eGangotri



Eisenhart, C. (1947), "The assumptions underlying the analysis of variance," *Biometrics*, **3**, 1.
Finney, D. J. (1947), "Errors of estimation in inverse sampling," *Nature, Lond.*, **160**, 195.
Fisher, R. A. (1925), *Statistical Methods for Research Workers*. Oliver & Boyd, Edinburgh. Tenth edition, 1946.
—— (1926), "The arrangement of field experiments," *J. Minist. Agric.*, **33**, 503.
—— (1935*a*), *The Design of Experiments*. Oliver & Boyd, Edinburgh. Fourth edition, 1947.
—— (1935*b*), "The logic of inductive inference," *J. R. Statist. Soc.*, **98**, 39.
—— (1935*c*), "The fiducial argument in statistical inference," *Ann. Eugen.*, **6**, 391.
—— (1936), "Uncertain inference," *Proc. Amer. Acad. Arts Sci.*, **71**, 245.
—— (1941), "The asymptotic approach to Behrens's integral, with further tables for the *d* test of significance," *Ann. Eugen.*, **11**, 141.
—— (1945), "The logical inversion of the notion of the random variable," *Sankhyā*, **7**, 129.
—— & Yates, F. (1943), *Statistical Tables for Biological, Agricultural and Medical Research*. Second edition. Oliver & Boyd, Edinburgh. Third edition, 1948.
Geary, R. C. (1936), "The distribution of 'Student's' ratio for non-normal samples," *Suppl. J. R. Statist. Soc.*, **3**, 178.
Hey, G. B. (1938), "A new method of experimental sampling illustrated on certain non-normal populations," *Biometrika*, **30**, 68.
Hoel, P. G. (1945), "Testing the homogeneity of Poisson frequencies," *Ann. Math. Statist.*, **16**, 362.
Jeffreys, H. (1939*a*), "Random and systematic arrangements," *Biometrika*, **31**, 1.
—— (1939*b*), *Theory of Probability*. Oxford U.P. Second Edition, 1948.
—— (1940), "Note on the Behrens-Fisher formula," *Ann. Eugen.*, **10**, 48.
Kempthorne, O. (1947), "A note on differential responses in blocks," *J. Agric. Sci.*, **37**, 245.
Kendall, M. G. (1941), "A theory of randomness," *Biometrika*, **32**, 1.
—— (1946), *The Advanced Theory of Statistics*. Vol. 2. Griffin, London.
—— & Babington Smith, B. (1939), *Tables of Random Sampling Numbers* (Tracts for Computers, No. 24). Cambridge U.P.
McCarthy, M. D. (1939), "On the application of the *z*-test to randomized blocks," *Ann. Math. Statist.*, **10**, 337.
Neyman, J. (1935), "Statistical problems in agricultural experimentation," *Suppl. J. R. Statist. Soc.*, **2**, 107.
—— (1941), "Fiducial argument and the theory of confidence intervals," *Biometrika*, **32**, 128.
Pearson, E. S. (1931), "The analysis of variance in cases on non-normal variation," *ibid.*, **23**, 114.
—— (1937), "Some aspects of the problem of randomization," *ibid.*, **29**, 53.
—— (1947), "The choice of statistical tests illustrated on the interpretation of data classed in a $2 \times 2$ table," *ibid.*, **34**, 139.
Pearson, K. (1892), *The Grammar of Science*. Scott, London.
Pitman, E. J. G. (1937), "Significance tests which may be applied to samples from any populations," *Suppl. J. R. Statist. Soc.*, **4**, 119.
—— (1938), "Significance tests which may be applied to samples from any populations. III. The analysis of variance test," *Biometrika*, **29**, 322.
Scheffé, H. (1943), "Statistical inference in the non-parametric case," *Ann. Math. Statist.*, **14**, 305.
Welch, B. L. (1937), "On the *z*-test in randomized blocks and Latin squares," *Biometrika*, **29**, 21.
—— (1938), "On tests for homogeneity," *ibid.*, **30**, 149.
—— (1947), "The generalization of 'Student's' problem when several different population variances are involved," *ibid.*, **34**, 28.
Wolfowitz, J. (1942), "Additive partition functions and a class of statistical hypotheses," *Ann. Math. Statist.*, **13**, 247.
Yates, F. (1933), "The formation of Latin squares for use in field experiments," *Emp. J. Exp. Agric.*, **1**, 235.
—— (1934), "Contingency tables involving small numbers and the $\chi^2$ test," *Suppl. J. R. Statist. Soc.*, **1**, 217.
—— (1937), "The design and analysis of factorial experiments," *Tech. Commun. Bur. Soil Sci., Harpenden*, 35.
—— (1939*a*), "The comparative advantages of systematic and randomized arrangements in the design of agricultural and biological experiments," *Biometrika*, **30**, 440.
—— (1939*b*), "An apparent inconsistency arising from tests of significance based on fiducial distributions of unknown parameters," *Proc. Camb. Phil. Soc.*, **35**, 579.
—— & Cochran, W. G. (1938), "The analysis of groups of experiments," *J. Agric. Sci.*, **28**, 556

## APPENDIX

### *The Effect of Randomization on Correlated Variables*

It was remarked in § 2.13 that inaccuracy of normal law methods in the analysis of an experiment arises both from the parent distributions not being normal and from the successive distributions being correlated (or independent but different, or however we like to express the idea of heterogeneity). It is the heterogeneity that the randomization is introduced to correct.

CC-0. In Public Domain. Gurukul Kangri Collection, Haridwar

Digitized by Arya Samaj Foundation Chennai and eGangotri



Although the effect of correlation between observations has been considered by some writers, e.g. Daniels (1938), I believe the effect of randomization on the correlations has not been shown explicitly.

Let us suppose that the null hypothesis is true and that the observations $x_1, x_2, \ldots x_N$ have a joint distribution, with an additive constant adjusted so that

$$E(\sum_1^N x_i) = 0 \quad . \quad . \quad . \quad . \quad . \quad . \quad . \quad (1)$$

A design is superimposed on the observations. It is derived from some "master design" by a stated process of randomization, consisting of a permutation. Let the permutation be reversed and the observations $\{x_i\}$ be written in the order of the master design, and renamed $\{y_i\}$. Then the joint distribution of the $\{y_i\}$ has a high degree of symmetry, depending on the scheme of randomization.

In Experiment 1, the master design may be taken as $n$ *P*s followed by $n$ *Q*s. Each of the $y_i$, each pair $(y_i, y_j)$, each set of three $(y_i, y_j, y_k)$, etc., has the same distribution or joint distribution, independent of the values of the suffixes ($i, j, k, \ldots$ being all unequal). We have also $E(y_i) = 0$.

In Experiment 2, the master design may be taken as the treatments $T_1, T_2, \ldots T_r$ written in order, and the sequence repeated $(s - 1)$ times, each repetition being called a block. We may suppose that the randomization not only involves randomization of the order within each block but also randomization of the numbering of the blocks. As no block treatments are applied, the block randomization is immaterial practically, but it is convenient here to suppose it done. Then each of the $y_i$ has the same distribution, with zero mean; and the joint distribution of any set $(y_i, y_j, y_k, \ldots)$ depends on how many of the members belong to the same blocks, but is otherwise independent of the values of the suffixes.

In Experiment 3, let us suppose the design is derived by a randomization of type $\alpha$ or $\beta$ from a master Latin square. Then each of the $y_i$ has the same distribution, with zero mean; and the joint distribution of any set $(y_i, y_j, y_k, \ldots)$ depends only on how many of the members occur in the same rows or columns.

Let us suppose for a moment that the joint distribution of the $\{y_i\}$ is normal. In Experiment 1, all the $y_i$ have the same variance, $\sigma^2$ say, and any pair have the same correlation coefficient, $\rho$ say. Writing down the characteristic function of the joint distribution, we see at once that if $\rho > 0$ we may represent the $y_i$ in the form

$$y_i = a + \eta_i \quad . \quad . \quad . \quad . \quad . \quad . \quad (2)$$

where $a$ is an observation from a normal distribution with zero mean and variance $\rho\sigma^2$, and is the same for all $i$, while $\eta_i$ is an observation from a normal distribution with zero mean and variance $(1 - \rho)\sigma^2$, and is independent of $a$ and $\eta_j$ for $i \neq j$. We deduce at once that ordinary normal-law methods of analysis are exactly correct.

Similarly for Experiment 2. Let $\sigma^2$ be the variance of each of the $y_i$, $\rho$ the correlation between *y*s in the same block, and $\rho'$ that between *y*s in different blocks. Then if $\rho > \rho' > 0$ we can write

$$y_i = a + \xi_b + \eta_i, \quad . \quad . \quad . \quad . \quad . \quad (3)$$

where the variables on the right-hand side are normally and independently distributed with zero means, $a$ has variance $\rho'\sigma^2$ and is the same for all $i$, $\xi_b$ has variance $(\rho - \rho')\sigma^2$ and is the same for all $y_i$ in the same block but varies from block to block, and $\eta_i$ has variance $(1 - \rho)\sigma^2$. Again, ordinary normal-law methods of analysis are exactly correct.

And for Experiment 3 we have three correlation coefficients to consider, $\rho_r$ between *y*s in the same row, $\rho_c$ between *y*s in the same column, and $\rho'$ between *y*s not in the same row or column. We get, if $\rho_r, \rho_c > \rho' > 0$,

$$y_i = a + \xi_r + \xi_c + \eta_i, \quad . \quad . \quad . \quad . \quad (4)$$

where $a$ has variance $\rho'\sigma^2$ and is the same for all $i$, $\xi_r$ has variance $(\rho_r - \rho')\sigma^2$ and is the same for all *y*s in the same row, $\xi_c$ has variance $(\rho_c - \rho')\sigma^2$ and is the same for all *y*s in the same column, and $\eta_i$ has variance $(1 - \rho_r - \rho_c + \rho')\sigma^2$. This last is necessarily positive if the covariance matrix of the *y*s is positive definite.

CC-0. In Public Domain. Gurukul Kangri Collection, Haridwar

Digitized by Arya Samaj Foundation Chennai and eGangotri



Thus, in considering the correlations between pairs of the $y_i$ and assuming a joint normal distribution, we have found a simple method of deriving the models (2), (3), (4), that are usually postulated for the ordinary normal-law analysis. (I owe this remark to Mr P. M. Grundy, who drew my attention to the need for such a method. One would like now to show that if the normal-law analysis is exactly correct, it is necessary that the joint distribution of the $y_i$ should be normal.) So far as the correctness of a normal-law analysis of variance goes, it is immaterial whether the inequalities just given between the correlation coefficients are satisfied or not. In practice they generally appear to be. If they are not, some of the components in (2), (3), or (4) will have negative variances.

Now in fact, if there are any correlations between the observations at all, it is most unlikely that the joint distribution of the $y_i$ should be exactly normal. In Experiment 1, 2, or 3, if the $x_i$ are drawn from a stationary normal stochastic process, such that not all pairs of observations are equally correlated, all the $y_i$ have the same normal distribution singly but are not jointly normally distributed. We may ask what in general is the distribution of the ratio of treatment mean square to error mean square. A little progress can be made fairly easily considering moments. I hope to publish a note on this subject shortly.

## Discussion on Mr. Anscombe's Paper

Dr. Irwin: I am going to avoid any technical criticism of this paper. In the presence of so many people much more expert than myself, both in knowledge of practical details of scientific experimentation and in the theoretical details of systems of inference, it would be inappropriate for me to make those combative criticisms which often seem to be regarded as the prerogative of the proposer of the vote of thanks. But there are one or two considerations which I believe to be important, and some of them, I think, have never been explicitly stated. In putting them forward I may be trespassing on the territory of philosophy, in which I am an amateur, but I take the risk.

Statisticians seem to vary enormously in regard to the importance which they attach to probability theory and systems of inference. Some extremely competent practitioners in particular fields scarcely use either, but trust to their expert knowledge in a particular field and to intuitive logic and common sense. Most others, I think, are content with a practical application of the frequency theory of probability without inquiring into its foundations. For them the probability of an event is the relative number of times it occurs in the long run, and they do not inquire into the sense in which this ratio approaches a limit. The more philosophically critical and mathematically minded inquire into the logical foundations of the theory of probability, but they differ greatly in the depth to which they penetrate.

Here one can distinguish three main theories of probability. First, there is the classical theory. This defines probability as the ratio of favourable cases to the total number, when there is a finite number of alternatives, and which is extended to an infinite number by the use of the modern theory of sets. It is particularly associated in modern times with the name of Cramér. Before it can actually be used in statistics we need, in my opinion, to build up a theory of frequency based on the classical theory by use of the uniform law of large numbers in the manner put forward by Professor Bartlett some years ago.

Secondly, there is the frequency theory. This starts with the notion of probability as the limit of a frequency whether developed in the manner of Von Mises or otherwise. In one sense this is an offshoot of the first.

Thirdly, there is the subjective theory associated particularly with the names of Keynes and Jeffreys, which defines probability as a degree of rational belief. Without the third I do not think that we can put into numerical form our degree of belief that an experimental result which has been observed to hold in the past will continue to hold in the future. We have either to accept some such set of axioms as Professor Jeffreys' or conclude that our degree of belief or, in the true sense, our degree of confidence in a prediction is not measurable. The tests of significance usually employed refer only to the past. They justify us in concluding in appropriate cases that, say, fertilizer A or drug A has done better than fertilizer B or drug B, and that this is not fortuitous; they are not the basis of our belief that B will do better than A next time. This belief is ultimately based on the belief that it is possible to learn from experience. And now we come to a fundamental criticism. It is, in my opinion, impossible to *prove* that it is possible to learn from experience. It is impossible to *prove* the validity either of deductive or inductive logic. Deductive logic is based on certain axioms such as "a thing cannot both be and not be" or more profound

CC-0. In Public Domain. Gurukul Kangri Collection, Haridwar

Digitized by Arya Samaj Foundation Chennai and eGangotri



ones. It is impossible to prove those because we should have to assume them before we began the proof. Equally we cannot prove the validity of inductive logic; it is impossible to prove that any inference is possible from past experience to future expectation. When we affirm that we believe that an eclipse will occur in the year 1952 because the astronomers say so, and predictions of eclipses based on the Newtonian Theory of Gravitation have always come off in the past, we are tacitly assuming that future futures will resemble past futures and this begs the question.

So I will put forward this proposition, *Belief in the validity of inductive and deductive logic rests ultimately on faith and nothing else.* Do I believe in their validity? Broadly speaking, of course I do. We all believe that it is possible to learn from experience. But it is just as well that we should realize the basis of this belief. What practical conclusions then should we draw from this? I think all students of statistics should learn something about probability from a frequency point of view. When teaching students with mature minds who are yet new or almost new to the subject, I usually give an outline of the different theories of the subject, tell them that they will find the frequency theory the most useful in practice, and to suspend judgment on which theory they will ultimately prefer as a basis until they have had more opportunities of study.

Practically minded people with no great taste for logical and philosophical speculation need not probe too deeply. They will probably be just as good statisticians if they don't. More theoretically profound minds will gain much insight if they do and will be able to help the others on critical occasions. But we must admit that what level we agree to call axiomatic is largely a matter of taste. I should like to end with a quotation from the paper, paragraph 6.08: "Since none can prove us wrong we may hold it as an article of faith that the truth will prevail." There could not be a better sentiment with which to start the discussion.

It is a pleasure to propose a vote of thanks to Mr. Anscombe for a paper which is both learned and interesting.

Professor G. A. BARNARD: However philosophical and abstract some of Mr. Anscombe's remarks may be, they are founded on an unusually broad experience. He is one of the few who have had the experience of practical statistics both in the classical field of agriculture and in the more recent application to industrial statistics. I recall with considerable pleasure the discussions —or arguments—we had together when we were both in the Ministry of Supply during the war. This wide experience of Mr. Anscombe's is relevant, I think, to the subject because it accounts for his tolerant attitude to the foundations of the subject.

All three main theories of statistical inference seem to have their proper sphere of application. What we should ask is, not so much which is right, but to what sort of field each theory should be applied; which framework is better in certain circumstances. For example, in considering industrial inspection Dodge and Romig, two engineers, evolved the notions of producer's risk and consumer's risk, and these have been practically useful in statistical inspection. They are identical in content with the Pearson notion of errors of first and second kind. Again, during the war we had occasion to deal with other sorts of inspection problems, and in this connection we introduced the idea of the process curve, which is nothing but the *a priori* distribution of Professor Jeffreys. I must admit that in my own experience so far, cases where Professor Fisher's theory would have been most suitable have not been very frequent. I think that is because most of my problems have been those where it is necessary to make an administrative decision, rather than those in which one is concerned to established or disprove a scientific theory. Our work is more concerned with immediate practical decisions, but I do not doubt that with wider experience I should have been able to quote practical cases for that also.

We are, then, left with three theories—the Jeffreys theory, the Pearson theory, and the Fisher theory. I think when we are discussing the foundations of statistics we should draw attention to the fact that this discussion is really, from a practical point of view, a discussion of the fine points of detail. All statisticians agree about what should be done in practical problems. The situation in statistics is really quite like the situation in mathematics. The foundations of mathematics have been discussed and queried for a long time. These discussions are now so broad and widespread that there is a journal devoted to them entirely. Yet no mathematician doubts that any of the mathematics are sound.

Now for the argument. It seems to me that there is a serious objection to the use of the hypothesis in Mr. Anscombe's experiment 1, namely, the statistical hypothesis about the treatment of the two manufacturing processes, $P$ and $Q$, producing similar effects statistically. As soon as one begins to regard the results of treatment as random variables one comes up against the problem of the reference set. Professor Fisher drew my attention to the pitfalls in this connection in a private note, and I must say that the more I have thought about these pitfalls, the more serious they seem to me to be.

CC-0. In Public Domain. Gurukul Kangri Collection, Haridwar

Digitized by Arya Samaj Foundation Chennai and eGangotri



In paragraph 2.09 the author says, "Let $F_i(x)$ be the distribution function of the reading $X_i$ that will be obtained at the $i$th observation in experiment 1 if the article was given treatment $P$, and $G_i(x)$ the distribution function of the reading $Y_i$ that will be obtained if the article was given treatment $Q$." It seems to me that that is rather a short statement. We might say more fully: "let $F_i(x)$ be the distribution function of the series of readings $X_i$ that will be obtained in the series of repetitions of experiment 1, if the article was given treatment $P$ and $G_i(x)$, etc." In putting the matter in this way it reveals that we are introducing a concept of a series of repetitions of experiment 1, and when we think about these repetitions of the experiment, whether we think of them as real or imaginary, we have to specify what those repetitions are.

What is common to the series of repetitions? Do all the external circumstances remain constant in the sequences? If all the external circumstances remain constant, the repetitions of the experiment would give us exactly the same result as we had the first time. If not all the external circumstances, then which parts of them remain constant? The advantage of hypothesis $A$ over hypothesis $C$ in this connection seems to me that here there is no question of other observations or of really repeated experiments. What is repeated in order to give the distribution required for the significance test is the randomization procedure. Here there is only one possible reference set, and that is uniquely defined by the randomization procedure used in the given experiment.

Having said that, I must say that the author's criticism of hypothesis $A$ is, I think, entirely sound. It is a very limited hypothesis, but we must recognize that if we want to achieve the amount of rigour that attaches to the significance test of hypothesis $A$ we have to limit ourselves to that sort of narrow hypothesis.

We have also to remember that a significance test, interpreted somewhat narrowly, as it must be, only allows us to say what is not true, but that does not involve proving a general proposition. In this connection a remark of Professor Jeffreys is worth quoting—that the methods of significance tests used in this way seem to enable us to disprove a great deal but never to prove anything.

I should like finally to make it clear that I disagree with all four parties to the controversy. The snag in Professor Jeffreys's theory is that to work it one has to specify a probability distribution for a class of alternative hypotheses and the whole of the probability has to be distributed. One must when interpreting one's experiments be able to think of all possible explanations of the data, and that, I think, none of us believe that we can do. It is always possible for someone to produce later an entirely new explanation we had never thought of, and which would not be represented in the hypothesis nor in the alternatives we had tested.

Taking that criticism it does suggest that in talking about inference from the probability point of view, leaving aside the rigorous ground of the randomization test, we ought to formulate our ideas, not in terms of probability, but in terms of odds. Bayes's theorem, in terms of odds, says that *a posteriori* odds = likelihood ratio (A) $\times$ *a priori* odds. We can separate out the two factors on the right-hand side, and it seems to me that along those lines it is possible to reconcile to some extent the various theories. Professor Jeffreys takes the second factor as equal to one by a special axiom or assumption. Professor Fisher seems to say we ought to neglect the second factor; but that is equivalent to saying that A times 1 is equal to A. Finally, Neyman and Pearson say that A itself is a frequency probability of errors, and this is so provided the reference set used is that of the sequential probability ratio test.

I conclude by seconding with great pleasure the vote of thanks to the author.

Professor R. A. FISHER, in congratulating Mr. Anscombe on his extremely interesting paper, said that he had covered an extraordinarily wide field—so wide a field that he had scarcely had the opportunity to analyse any of the detail. He thought that the most useful thing he could do was to make one or two isolated comments. In paragraph 5.17 Mr. Anscombe gave an example to explain why he had found his (Professor Fisher's) theory of statistical inference difficult to understand. His example was the statement that the discontinuous observation of a binomial sample did not give an exact fiducial distribution for the unknown probability. He thought that here the author must have got hold of the wrong end of the stick. He imagined that no one thought that the observation of $a$ failures out of $n$ trials supplied a fiducial distribution. In a discussion in that Society in 1935* he criticized Dr. Neyman, who had just then given an exposition of his views, for not distinguishing such cases from those in which with a continuous observable variate exact fiducial distributions could be inferred.

* *J. R. Statist. Soc.* (1935), **98**, 39.

CC-0. In Public Domain. Gurukul Kangri Collection, Haridwar

Digitized by Arya Samaj Foundation Chennai and eGangotri



Dr. Neyman was here speaking of confidence limits, and he saw that Mr. Anscombe had come to the conclusion that "exact confidence limits cannot be applied" (save by a device exposed to obvious criticism). If by exact confidence limits was meant exact statements for fiducial probability, then he was perfectly right, though on quite old ground. It seemed that his difficulty in understanding his (Professor Fisher's) theory, of which, after all, Dr. Neyman's was a later re-formulation, must lie in some confusion between the two systems.

The heading of Stevens's Table VIII–I referred to by Mr. Anscombe was "limits of the expectation." It might just as well have been, as he said, "limits of the probability" or, indeed, "limits of significance," without requiring one to explain anew that statements of fiducial probability based on these limits, which were not in fact made, would, if made, be inequality statements asserting that the probability that the unknown lay outside those limits, did not exceed the level of significance chosen. The same was of course true if those same limits were called, as Dr. Neyman preferred, "confidence limits." There was little room in all this for confusion, and he did not think that either Stevens or Finney had expressed himself ambiguously.

Perhaps he might add a word about another difficulty discussed in the paper, namely, the cases in which the observations contradicted, or were incompatible with, some one of the presuppositions on which the experiment was planned. In such cases the correct logical course appeared to be unmistakably clear. It should be admitted that the experiment as planned had failed. It might indeed have resulted in the knowledge how better to carry out the experiment in future, so that it could be analysed with results which might be relied on. But clearly, the experiment had not in strict logic supplied the information hoped for from it. After all, no one was under any obligation to analyse the results at all.

After admitting this unexceptional conclusion as the only logical one, one might of course, at one's own risk and with due warning to others, draw whatever conclusions from it which appeared reasonable. After all, most of what is learned in life is not learned from properly controlled experimentation. To an official body hoping to obtain from an experiment guidance on policy the distinction between an objective demonstration and a plausible personal opinion should be made unmistakably clear as Mr. Anscombe seems to feel.

Professor PEARSON said that he welcomed the paper because of the stimulus which it gave in a field where we had certainly not reached a final answer. It opened up many subjects for discussion, but he would confine his remarks to certain points suggested by the diagram on p. 195 describing what the author had termed the logical connections of thought processes. Mr. Anscombe had said that the diagram was set up in accordance with the Neyman-Pearson system of inference; he had also remarked that the *mathematical theory* in this system was deductive only, and that no description had, he believed, been given as to how inferences should be made. The speaker said that the problem was one which he had thought about a good deal. The difficulty in producing any formal rules of inference which would be useful in practice seemed to lie in this fact: when one tried to analize the reasoning process one had actually gone through in reaching conclusions after applying statistical technique to experimental data, it did not always seem easy to separate out the deductive and inductive steps. The mind did not obviously work to set rules. He believed that in the major scientific investigations where statistical technique was instrumental in the advancement of knowledge, it would be found that the conclusions reached were based on a synthesis of many experiments or much observational material. This synthesis took place at the level where Mr. Anscombe's chart showed in parallel the elements (i) prior knowledge, (ii) statistical analysis, (iii) semantic postulates, and it occurred not only at the end of an investigation but at all intermediate stages where the results of one experiment were used to determine the next step. There were no doubt other elements brought in; he thought that in many cases what might be termed (iv), a review of the consequences of alternative decisions, must be introduced. Probability measures had to be interpreted in terms of risks. Without this, we could not rationally make use of the information that a statistic such as $\chi^2$, $t$ or $F$, lay at a particular percentage level; we could only follow some suggested rule of thumb. He thought that Mr. Anscombe's separation of (i) and (iii) was illuminating. He had been inclined hitherto to class them together under the heading of available knowledge. But the division seemed justified, if only because it raised the question of whether Jeffreys's theory could be extended to give numerical measure to our degree of confidence in such hypotheses as those of randomness, normality, reliability of experimental data and so on.

Considerations as to (i), (iii) and (iv), in greater or less degree according to the type of problem, were taken into account consciously or unconsciously in the course of any investigation in which statistical analysis was employed. It had yet to be shown that a mathematical theory could

CC-0. In Public Domain. Gurukul Kangri Collection, Haridwar

Digitized by Arya Samaj Foundation Chennai and eGangotri



make possible their assimilation into the process of inference on a numerical basis. In balancing these elements to reach conclusions leading to action the power of judgment was called into play; it was something which might be intuitive, a quality which scientific training aimed at developing, but whose possession was no monopoly of the statistician. The judgment might be an individual one or it might be a collective one according to the magnitude of the problem. The question which he raised was whether it was possible to lay down usefully any formal rules of induction, specifying how the various aspects of the problem needing review could be brought together to reach a balanced decision.

Dr. F. YATES said he was very much pleased to have an opportunity of contributing to the discussion, especially as Mr. Anscombe had been a most valuable member of his Department at Rothamsted for two years. The speakers so far had confined themselves to the general theoretical problem. He wanted to turn to the practical aspects encountered in agricultural and biological experimentation, because he had found that when it came to practical applications much of the confusion which appeared to surround the theoretical aspects faded away.

The first point that struck the practical man was that experiments in general performed two different functions, one being to test the significance of a certain hypothesis, and the other to estimate the magnitude of the deviation from that hypothesis if, in fact, it was found to be, or was suspected of being, untrue. In many fields of experimentation where the techniques under discussion to-night had been most fully developed practically all the experiments were primarily undertaken for the purpose of estimation. This did not mean that the practical man was not concerned with having a correct theoretical basis for his conclusions. Thus, he (the speaker) would regard randomization as of more importance than the author appeared to imply in the final section of his paper, where he stated that randomization was a matter which could be left to the choice of the worker, particularly when making experiments to arrive at administrative decisions. Personally, he (the speaker) thought that this was a very dangerous line. Randomization gave one an assurance that due allowance would be made for the extraneous and troublesome sources of variation, which might be following laws which one had neither the time nor the knowledge to investigate, but which nevertheless might lead to erroneous conclusions if there were not randomization. Randomization, in fact, provided a procedure by which the experimenter (or administrator) could avoid having to think about the various extraneous sources of variation, and leave himself free for what, after all, was his main job—that of thinking about the results of the experiments.

Randomization, then, not only enabled a valid test of significance to be made, whether this test was based on normal theory or on some randomization process, but also provided a valid estimate of error, which was applicable to the estimates derived from the experiment. In certain circumstances systematic designs might be admissible, but it must be recognized that not only did they invalidate the test of significance, but that they were also incapable of furnishing a valid estimate of error. In much experimental work this latter estimate had a certain importance.

Of course, randomization did not take care of all troubles. Thus, to take one example, which the author had already mentioned in another connection, if an experiment was attacked by birds the plots of a variety which was substantially earlier than the other varieties in the experiment or in the surrounding neighbourhood would be likely to suffer much more severely than they would if the variety were widely grown in the neighbourhood. In such a case, since all plots of the variety might suffer to a similar degree, this source of error would not be included in the estimate of error.

Another way in which confusion had arisen among many workers was because there were often a number of alternative tests of significance which could quite validly be applied to a given experiment. Thus, one could apply randomization tests or normal theory tests. In a large experiment the results of the two tests might be expected to approximate very closely to one another. But this was not true of a small experiment with a few plots only. Consequently it must be decided on general grounds, having regard to the nature of the variation, computational convenience, etc., which test of significance was to be used and then to abide by the verdict of that test. This appeared to be the source of Welch's difficulty in the paper referred to. Welch gave a method of obtaining an approximation to the randomization test in Latin squares and randomized blocks, and showed, by means of this approximation, that there was considerable difference in particular instances between the randomization test and the normal theory test. On the basis of this he implied that in exact work the results of the normal theory test should be modified by the use of his approximation. This, apart from its impracticability, appeared to the speaker to be an entirely unnecessary and, indeed, incorrect procedure. The randomization test had no

CC-0. In Public Domain. Gurukul Kangri Collection, Haridwar

Digitized by Arya Samaj Foundation Chennai and eGangotri



greater claim to validity (provided one was satisfied that the material was distributed in such a manner that the normal theory test applied) than had the normal theory test.

He had hoped that the author might have alluded to some of the problems that arose in connection with the more advanced experimental designs that were now in current use. He would mention two of them. The first arose in quasi-Latin square designs.* In a $2^6$ factorial design in 64 plots, for example, the plots could be arranged in an $8 \times 8$ square pattern on the ground in such a manner that a certain set of three and four factor interactions was confounded with rows, and another similar set was confounded with columns. Unfortunately, the restrictions required to effect this were such that it was possible, with certain arrangements to the rows and columns, for the contrast representing one of the main effects to consist of the contrast between the diagonally opposite pairs of quarters of the whole square. If rows and columns were randomized this contingency would occur quite frequently—more frequently in fact than had been realized when the design was originally recommended.

For certain purposes the design was a valuable one, and one possible method of overcoming the above objection, in part at least, would be to abandon the complete randomization of rows and columns, and instead use a standard pattern chosen so as to avoid as far as possible contrasts involving groups of neighbouring plots, and to determine by a random process which of the 49 treatment and error degrees of freedom should be associated with particular main effects and interactions.

A further problem arose in connection with lattice designs. The speaker had suggested that such designs could, if desired, be analysed as ordinary randomized blocks, with, of course, some loss of accuracy but no loss in validity. The basis of this statement was that the estimate of error for a randomized block analysis was unbiased. On the other hand, it must be recognized that lattice squares were not randomized blocks, since additional restrictions had been included, and more detailed examination showed that, with the randomized block analysis, some treatment comparisons tended to be more accurate than others, and that, to this extent, the use of a pooled estimate of error would not be fully valid.

He had brought forward these two problems merely as instances of the sort of way in which development of the theory might possibly be of help to the practical experimental designer. In both these instances the methods had been advocated on the basis of the existence of an unbiased estimate of experimental error, and in both cases more detailed consideration showed that there were certain objections to the methods (possibly not of great practical importance). In other words, the existence of an unbiased estimate of error, though a necessary condition for the validity of tests of significance and estimates of error, was not a sufficient condition.

He would like to conclude by expressing his thanks to Mr. Anscombe for a paper which had given rise to such a fruitful discussion.

Mr. M. G. KENDALL said that there were a number of points in this paper which had caused him considerable difficulty. First of all, the author drew a distinction between comparative and non-comparative experiments. He was afraid he did not follow Mr. Anscombe's line of thought. It seemed to him that if an inference was parametric it did not matter whether the parameter had a non-zero or a zero value. If there was any distinction here, was it not between the parametric and the non-parametric type of inference?

In some of the work to which the author referred on the other side of the Atlantic the word "non-parametric" was used in a sense which Mr. Kendall thought was unfortunate. When an American author talked of "non-parametric" inference he sometimes referred to the estimation of the range or median or some statistic or parameter of the population which did not appear explicitly in the analytical expression for the frequency function; but, in Mr. Kendall's opinion, this was just as much a parametric problem as any other. What they ought to mean by "non-parametric inference" was exemplified by the kind of case where they had to decide whether a population was normal or whether a process was random. Perhaps the author could explain whether he had more in mind than a distinction of this kind.

Secondly, Mr. Kendall referred to the theorem, namely, that "On the null hypothesis ($c$), the analysis of experiment 1 by the methods of normal-law theory will be exactly correct if and only the $2n$ observations are a (possibly non-random) re-arrangement of a sample from a normal distribution."

* F. Yates, *The Design and Analysis of Factorial Experiments*, Commonwealth Bureau of Soil Science, Technical Communication No. 35, 1937.

CC-0. In Public Domain. Gurukul Kangri Collection, Haridwar

Digitized by Arya Samaj Foundation Chennai and eGangotri



He had three difficulties about this. First of all, as it stood, he could not attribute any meaning to it. Secondly, if it had the meaning he thought it was intended to have, half of it was trivial and the other half might not be true. Thirdly, if it was true the result might not be important.

On the first point: the author gave as a condition that the observations were a (possibly non-random) re-arrangement of a sample from a normal distribution. Now any set of numbers is a possible random sample of this kind. If the theorem applied to any set of numbers whatsoever then he did not think it was true. If it meant that the normal-law theory applied to a sample from a normal population, then it was profoundly true, but not very informative.

On the second point: if the latter interpretation was correct, then he thought the converse was not proved, namely, that, for example, the "Student's" distribution could only be reproduced by samples from normal population. That might be true, but he did not think that it had ever been shown. It would be an interesting subject for inquiry whether it was true or not.

That brought him to the third point, namely, whether, if true, it was important. Take another example from normal theory. They now knew that if the sum of two independent random variables was distributed normally, then the distribution of each must be normal, and it followed that if a mean was distributed normally, then the sample could only come from a normal population. But it was also well known that the mean of a sample from almost any population was nearly normal. They then had a peculiar situation in which the theory was exact only in one type of case, but in practically every other type of case it was sufficiently near exactitude as to justify them in using the "normal" theory.

On this question of randomization he thought it ought to be laid down explicitly that although it was a mathematical convenience that the distribution under randomization was practically the same for large samples as for normal theory, from the theoretical viewpoint it was a most unfortunate thing because it confused the issue. It seemed to him that the randomization process was an entirely different type of inference from the process involved in reasoning from a normal sample, and there he joined issue once again with the author. He agreed with Mr. Anscombe's fundamental thought, but to Mr. Kendall it seemed that some of the paper tended to obscure the essential nature of the randomization inference. What it did in effect was to get rid of heterogeneity; what it did not do was to take the inferential step from what had happened in the sample to what would happen in other samples.

No process could reason from what had happened to what might happen if the process were applied to other things without some inferential nexus between the two, and no degree of randomization muddling up a set of observations could avoid making at some stage the essential inferential jump which said that what had happened would happen again. If one tried to get rid of that by discarding the idea of a hypothetical population from which the observed sample was taken, one could only be driven to replace it, as the author did, by notions of a model or a stochastic process. He could not see that one really threw light on the essential reasoning processes involved here by saying that one would not talk about the distribution problem or the hypothetical population; one would call it a model; and he was sure one did not convey anything new by calling it a stochastic process. Mr. Kendall wished, in conclusion, to call attention to a source of error in the manipulation of an experiment which seemed to him far more important in practice than all these theoretical problems which perplexed them in arm-chairs but not perhaps in carrying out practical inferences. If a man performed a successful experiment he told his friends about it and publicized it, but if it was a failure he tended to say nothing about it. The consequence was that the publications which described experiments were just about as biased a sample as one could possibly have. A very good example was afforded in the so-called tests for extra-sensory perception. Every now and again one of the Sunday newspapers came out with a story of delicate tests establishing an extra-sensory perception which was strongly supported by scientific evidence. For his own part he never knew any statistician who, having gone into the evidence, believed it, but one only got these cases published, not the experiments which were negative. Cases were published when somebody by sheer chance hit upon something which seemed to be significant. That was an an extreme case, but the same error might run through a great deal of the work on which they were engaged.

Mr. Kendall added that his comments had been critical, but he wished to end by saying how useful it was that someone of Mr. Anscombe's calibre should have devoted his time and attention to clearing up the enormous field of difficulty and doubt with which he had dealt that evening.

Dr. ISSERLIS said that he wished only to make one remark, namely, that so far as he remembered, Faraday published all his unsuccessful experiments.

CC-0. In Public Domain. Gurukul Kangri Collection, Haridwar

Digitized by Arya Samaj Foundation Chennai and eGangotri



The PRESIDENT thought that Faraday's unsuccessful experiments were on record in the archives of the Royal Institution.

Dr. YATES said that in his department they made a rule of publishing all field experiments, whether successful or not, and that principle was generally recognized in agricultural experimentation.

Mr. G. E. P. BOX said that statistical analysis could never bridge the gap between the interpretation of the data and the action which was subsequently carried out; its purpose was to clarify the situation and assess the probabilities more exactly. In decisions made in everyday life a two-stage process went on in the mind. In the first stage the facts, or data, were considered and the probabilities assessed; as a result of this, in the second stage, some action was decided upon. The mental assessment of probabilities was a very inexact process, and consequently the action taken was often wrong; the statistician tried to present this probability more accurately and so reduce the number of wrong decisions. Thus the first stage was made more precise. Stage two, however, must remain an inexact process depending on the person concerned.

With regard to the theory of statistical tests, he said that the normal theory approach and randomization theory could not properly be regarded as alternatives, since in some analyses randomization was clearly impossible owing to the nature of the experiment. Examples of this were set-ups in which one factor to be tested was the effect of position either in space or time. Randomization of position could not be carried out since it was position itself that was the factor. One of the things which randomization did was to overcome to a large extent the difficulty of correlated errors. In the type of experiments referred to the risk of correlated errors was especially great and, unfortunately, they had no randomization theory to fall back on.

Mr. HAYCOCKS said that it seemed to be generally agreed by the previous speakers that there were no fixed rules which enabled them to pass with certainty from some given data to a theory. Theories were not arrived at by a wholly rational process, but once a theory had been formulated there was no reason why rational ways of examining it should not be obtained. The process was not, strictly speaking, one of inference, but rather one of judgment. The adequacy of a theory was judged in relation to the evidence.

Systems of inductive logic were concerned with this relation between theory and evidence. They were, so to speak, rational reconstructions of what had been hitherto largely intuitive processes. A system of inductive logic did not attempt to justify induction, that would be futile—a pseudo-problem; one might as well try to justify life. Induction was necessary for survival. If the power of induction was weaker than at present, then life would be simply shorter and nastier.

Mr. Anscombe had examined several systems of inductive logic and it was surprising that he had not mentioned the work of Rudolf Carnap who, in recent years, had made some valuable contributions to this subject. Carnap's position, briefly, was that inductive logic was analogous to deductive logic. In the latter case there was complete entailment between two statements, in the former the implication was partial only. The object of a theory of probability was to set up a system of rules for measuring the degree of partiality. Carnap termed it degree of confirmation.

Carnap had noted two main difficulties:

(1) The systems of inductive logic at present available applied only to languages of a very simple structure, and therefore to a very simplified interpretation of the universe, whilst the practical application had to be made to actual complex phenomena.

(2) The degree of confirmation or logical probability had to be defined within this simple language structure, which meant that the evidence had to be relatively simple. Unfortunately, statements based on observation were often comprehensive and relatively complicated. It was for this reason that the ideal evidence was that derived from simple and well-designed experiments.

It was clear, then, that the conclusions derived from a theory applied strictly only to a very simple universe, and if these results were to be of practical value, it had to be assumed that the results would be approximately valid in a more complicated situation.

The present position appeared to be that the fact had to be accepted that it was possible to construct several systems of inductive logic. An adequate system would give probability values

CC-0. In Public Domain. Gurukul Kangri Collection, Haridwar

Digitized by Arya Samaj Foundation Chennai and eGangotri



which agreed closely with the intuitive values which scientists were already accepting. For example, in all the systems considered by the author the degree of confirmation for certain set-ups approximated to a relative frequency obtained from a large sample experiment. The modifications made recently by Professor Jeffreys to his system had the object of making his results more consistent and more in agreement with strongly held intuitions.

His (the speaker's) first reaction to these ideas and concepts was to consider why he should be willing to act on the basis of a probability number obtained by what seemed to be a rather abitrary method. He thought that the solution was to be found in the fact that action was based on expectations which were obtained from past experience. The evidence always contained a statement of frequency. This frequency might be one of events or it might relate to types of procedure, and it was facts of this nature which caused us to decide upon some course of action. Inductive logic attempted to formalize the procedure, that is, it attempted to construct a set of agreed rules, by which data and hypotheses could be so related as to enable us to make a sound judgment.

The requirement of total evidence was very important. The problems of randomness, bias, etc., were related to this requirement. A sample was a fair sample when it was given with all the known evidence. The situation then became a logical situation. They knew that a sample was one of many possible samples, and they knew by deduction that most samples as regards statistical composition matched the population from which they were drawn. Hence it was natural that they should have confidence in decisions based on a sample which they believed was fair. This seemed to be the author's position in section 5.

There was one other point he would like to mention. There has been a tendency to confuse a purely logical set-up with a set-up which really described a supposed uniformity or scientific law. In the case of a set of events such as the tosses of a coin they had a set of results which appeared irregular when ordered in time, but which became approximately regular when ordered in accordance with some other characteristic such as magnitude. This uniformity, if posited, enabled statements to be made about future observations, and when it was expressed in the form of a probability distribution it seemed to him that the formula was on a par with any other scientific law expressed in a formula. It was this confusion which caused scientists to assert that the laws of probability were valid just as any other physical law in virtue of the agreement of their consequences with experience. When a law of this type was set up there still remained, however, the problem of judging it in relation to the total evidence. The confusion was acute in the case of problems involving the binomial distribution, because in this case the same measure $p$ could represent in one context a degree of logical probability and in another it was a parameter in a descriptive law.

The main value of a consideration of probability logic, it seemed to him, was that it caused scientists to re-examine their methods in the light of recognized canons of sound reason, and that in itself could not but be helpful and stimulating to the development of experimental technique and scientific method.

The following written contributions were received after the meeting:

Mr. D. G. KENDALL: Unfortunately I was unable to attend the meeting at which Mr. Anscombe's paper was discussed, and I therefore would now like to mention one small point which has some bearing on the problems considered in the Appendix. The author is there concerned with the effect of randomization on a temporal sequence of observation $(x_1, x_2 \ldots, x_n)$ drawn at regular intervals from a stochastic process. He writes $\rho$ for the correlation between any two observations *after* randomization, and finds that the algebraic sign of $\rho$ is of importance in his analysis of the situation.

Now if $E(x_i) = 0$ and $E(x_i^2) = 1$ for all $i$, it can easily be shown that

$$\rho = \frac{1}{n-1}\{n \operatorname{Var}(\bar{x}) - 1\},$$

where $\bar{x} = \Sigma x_i/n$, and so while $\rho$ may be negative it can never be less than $-1/(n-1)$.

Mr. DUDLEY WALTON: Mr. Anscombe, in his paper, showed that he understood the difference between deduction and induction; but some of his commentators did not seem to be quite clear.

Deduction is the argument from cause to effect. It answers the question "What happens next?"

The difficulty with inductive enquiries is the temptation to find what one is looking for.

CC-0. In Public Domain. Gurukul Kangri Collection, Haridwar

Digitized by Arya Samaj Foundation Chennai and eGangotri



Mr. ANSCOMBE replied briefly, and subsequently amplified his remarks in writing as follows:

Whatever may be said of the paper that provoked it, I am sure all will agree that this has been a most valuable discussion. Much of it has clearly resulted from prolonged reflexion on the foundations of statistical method. There have been many stimulating remarks, giving food for thought and inviting discussion. Having already said my say at some length, I feel that my correct course now is to confine my reply to elucidating obscurities that have been pointed out in the paper and to answering some criticisms of detail. The paper has been written as far as possible in ordinary language, without special definitions or symbols. Such a policy, if successful, makes for ease of reading; if unsuccessful, for confusion. I fear that a good deal of confusion has in fact resulted. But first, I should like to express my sincere thanks to all speakers for their contributions. If I refer only perfunctorily or not at all to some of the points they have raised, it is because I do not feel competent, or have not the space, to comment usefully on them.

Dr. Irwin's admirably lucid statement takes us straight to the centre of the problem of induction. The something in addition to mathematical theory that is required to justify induction he refers to as the unprovable belief that it is possible to learn from experience. I referred to a "postulate of relevance" and to making "a random selection of the conditions to which we wish to apply the results of the experiment". Others have used some more definite principle, such as that of the uniformity of nature. These are all formulations, of varying precision, of the same philosophical difficulty.

Closely related is the question raised by Professor Pearson as to the profitability of attempting to lay down formal rules of induction. Here I think we are faced by a striking fact, namely, that persons recognized as good scientists will often agree about the interpretation to be placed on a body of evidence. This is not satisfactorily explained as being due to common prejudices of the time and of society. In so far as there is such agreement, it would be interesting to have the thought-process represented formally in some way. Perhaps only rather rough qualitative principles of scientific method could be formulated, say a Statistician's Guide to the Use of his Craft, consisting of a few simple maxims, but any such attempt would be interesting. One could not hope, of course, for a theory reproducing the creative part of inference-drawing, namely the framing of new hypotheses.

It is necessary to distinguish between a theory intended as an accurate representation of completely rational thought-processes, and a theory intended for everyday use in assisting rational thought-processes. The latter must be usable, the former need not be. I suppose Professor Jeffreys' probability theory could conceivably be extended to represent the whole process of induction, involving the assessing of likelihoods of the observations on all possible hypotheses of irrelevance as well as on the hypotheses under test. It would then be completely unusable except as a qualitative guide. To use it in practice we must perform part of the induction without it, and then, for reasons of mathematical ease, use unrealistic distributions of prior probability for the hypotheses actually considered. For practical use, therefore, the less ambitious Neyman-Pearson theory seems to me to be preferable. Perhaps I should stress that in my view the Neyman-Pearson theory contains no "rules of thought", i.e. instructions to the user as to what opinions he is to hold. Confidence limits are derived by a rule which is known to give a bracket to the unknown parameter with a certain frequency. They, therefore, express the evidence afforded by the experiment. We do not have to assert that the parameter lies between the confidence limits on any particular occasion, and if there is other evidence available we may very well make some quite different assertion. We are free, in fact, to draw any conclusion we think fit.

Professor Barnard and Mr. M. G. Kendall have expressed scepticism about the early part of the paper. I will, therefore, try to make some of the ideas clearer. The term "comparative" in the title was introduced to draw attention to the fact (which has not always been appreciated) that the device of randomizing the lay-out of an experiment applies only to certain kinds of experiments, namely comparative ones, as defined in §§1.03–05. Let us consider a sequence of similar observations—such as a number of attempts to measure the velocity of light by a particular method, or a series of repeat determinations of the chemical composition of a given quantity of material, or counts of the number of markings on some specimens of an insect species (not defined by such markings), or observations of the yield of some agricultural plots treated alike. There are several possibilities for the consistency of these observations. We may find that each observation gives precisely the same answer; this may happen when the reading is necessarily an integer. Until such time as we find evidence to the contrary, we shall describe the reading as a constant, and make some inductive inference concerning future readings being equal to the same constant. The next possibility is that we find that there are differences between the readings we have taken; whether we attribute the differences mainly to the technique of measure-

CC-0. In Public Domain. Gurukul Kangri Collection, Haridwar

Digitized by Arya Samaj Foundation Chennai and eGangotri



ment or to variability in the objects measured is irrelevant here. We may find, nevertheless, that we can describe the readings quite simply, as random samples from a probability distribution, meaning that they appear to have the properties we should expect from such samples and that we have failed to detect a systematic departure from such a model. Then we shall describe the probability distribution by estimating certain parameters in it, and make some inductive inference concerning future readings being random samples from this distribution. The model is more complicated than the previous one of a single constant, and involves more obvious estimation errors, but it is otherwise just as definite. The next possibility is that a still more complicated model is required, perhaps to allow for trends in successive observations. It may still be possible to use a well-defined model, such as a stochastic process defined completely in terms of some estimated parameters, or it may be necessary to use a model in which some parameters are not conceived of as constant, and are only very roughly estimated (or not estimated at all). Such a model is supposed to apply to any series of observations made at more or less the same time and place, while it is admitted that the unspecified parameters may depend on the time and place. Models fitted to agricultural observations must be of this vaguer type.

If a well-defined model can be fitted to the observations, we may regard the purpose of the observations as the determination of some constants, namely the parameters appearing in the model. When they have been estimated with sufficient accuracy, we know all we need about observations similar to those that have been made. This is what I meant by the remark in 1.05 that "the other main type of scientific experiment is concerned with determining absolute constants".

If, on the other hand, the model can only be partially defined, the observations may perhaps not be serving any very useful purpose. Now, many scientific experiments have as their immediate object the improvement of some routine process (I am thinking of experiments in industry and agriculture). Here we want to compare alternative methods under similar conditions, to judge what the effect would be of changing over from one method to another. When the result of using any one process cannot be described in terms of a well-defined model, we give up the attempt to determine it absolutely, and make comparative tests of the processes under similar conditions. It may happen that the comparison can be described by a well-defined model, but even if it cannot we are still deriving a rather vague estimate of the comparison we are primarily interested in. Hence the importance of comparative experiments.

Mr. Box quite rightly points out that it may be impossible to randomize a comparative experiment fully. In an experiment on a manufacturing process, if we wish to compare lengths of time between manufacture and testing (for maturing of the article) and if there is heterogeneity both in the conditions of manufacture and in the conditions of testing, we can neutralize either type of heterogeneity by randomization, but not both completely, and the best we can do is to make a series of overlapping tests and assume there is no progressive change in conditions.

I cannot see that the above concepts of probability models are in any way more elusive than any other scientific concepts. No idea is involved of an imaginary series of repetitions. An explanation of what we mean by the phrase "The atomic weight of carbon is 12" does not have to begin "Imagine an experiment being performed on every carbon atom . . ." When we postulate any probability model for our observations, we compare the actual readings obtained with the whole class of what-might-have-beens specified by the probability model; and then if we calculate, say, a pair of confidence limits, we know that the limits will have a stated long-run frequency of bracketing the unknown parameter when such calculations are performed on the experiments we do actually carry out, provided our probability model is always a correct one. The model is introduced as the simplest description of what is observed. It specifies a class of what-might-have-beens, but there is no need to attempt to describe a series of imaginary repeat experiments "under similar conditions", since the nett result of using the model is to make frequency statements about the experiments actually carried out.

A further matter raised by Mr. Kendall concerns the meaning and usefulness of the surmised theorems in §§2.16, 2.22 and 2.26. I thought at first that (as stated in §2.26) a comparison of the conditions under which a normal-law analysis is exactly correct, for various experimental designs, would give some clue to the comparison of conditions under which it is nearly correct. On reflexion, the argument appears to be weightless. Admitting therefore that the theorems are perhaps entirely unimportant, I need not add to what seems to me an adequate account of their meaning given in the text.

I am much obliged to Professor Fisher for his statement on fiducial limits to a binomial frequency. His later remarks are rather compressed. If the observations contradict one of the presuppositions on which the experiment was planned, this may be because the presupposition arose from an incorrect theory. If the experiment leads to the discovery of this fact, it has been

CC-0. In Public Domain. Gurukul Kangri Collection, Haridwar

Digitized by Arya Samaj Foundation Chennai and eGangotri



by no means a failure. Much depends on how strongly we believe our presuppositions to be true. It is my contention that an "objective demonstration" and a "plausible personal opinion" differ in degree only and not in kind, and that no "unmistakably clear" boundary between them exists.

Dr. Yates professes to disagree with me over the need for randomization, but otherwise his remarks seem perfectly compatible with my line of argument, and in fact provide helpful illustrations of several points. It is to be hoped that he will describe his device of restricted randomization of a $2^6$ experiment double-confounded in an $8 \times 8$ square more fully elsewhere, as this appears to be an original and interesting idea.

Mr. Haycocks's remarks on Carnap's theory are welcome. My reason for not mentioning the recent work of Carnap, Hempel, and others, on probability-logic is that I was unaware of it.

Mr. D. G. Kendall's inequality for the correlation coefficient $\rho$ is interesting. I have made some further remarks on this subject in discussion of Professor Champernowne's recent paper (*Journal*, Series B, Vol. 10).

As a result of the ballot taken during the meeting, the candidates named below were elected Fellows of the Society:

Robert Harold Sydney Beacham.
William Cunningham Wright Borland.
Samuel Brand.
John Frederick Thomas England.
Arun Kumar Ghosh.
Philip Dalton Greenall.
Harold Bertram Hales.
Edwin Hodson.
George Arthur Hoffen.
Herbert Ingham.
Charles Burt Lax.
Mary Maltby.
Ronald Gordon Newton.
Stephen Edward Prior.
Albert Eric Shaw.
Harold Silcock.
George Percy Sillitto.
David Ronald Taylor.
Gordon James Wagland.
Richard Walter Westley.
W. G. Wormal.
Maurice William Walter Murray Yeatts.

CC-0. In Public Domain. Gurukul Kangri Collection, Haridwar

Digitized by Arya Samaj Foundation Chennai and eGangotri



# The Teaching of Statistics

[A Discussion before the Royal Statistical Society held on April 27th, 1948, The President, Dr. David Heron, in the Chair]

## Opened by Dr. John Wishart

1. Nine years ago a paper was read before the Society on some aspects of the teaching of statistics (*Journal*, 1939, 102, 532), and it may be useful to begin by quoting some of the points made then: (*a*) Official and business statisticians should be concerned about the training of recruits for the profession, and should make known their requirements; (*b*) advances in statistical theory have built up a branch of study that is a useful medium of instruction to mathematicians; such study should be encouraged, particularly because of the need in the country for mathematically trained statisticians; (*c*) study of the state of things in relation to teaching generally revealed a number of weaknesses; (*d*) an important advance would be the production of a treatise on mathematical statistics, which would have an effect on methodological text-books; (*e*) practical work was important for the understanding of the subject and the acquisition of technical skill; (*f*) the study of statistics was important from the purely educational aspect.

2. It is interesting to recall that the main criticism the paper received at the time was that in subject matter it seemed to lie dangerously on the edge of the Society's Charter (which position it apparently shared with the Industrial and Agricultural Research Section), and that it overstressed mathematical statistics as applied to small samples. Few could have foreseen at that time that within three months the country would be at war, and that over the next few years a number of unusual things would have happened, of which the following may be singled out as of domestic concern to the Society: (*a*) Mathematical statisticians of the academic order found themselves in government administration, helping with official statistical work, generally of the economic order; (*b*) mathematicians found that what they were required for was essentially practical mathematics, with much computing and a good deal of statistics; (*c*) the problem of the employment of biologists was solved by discovering how good they were as a class in planning experiments and analysing the results statistically; (*d*) there was a great development of industrial statistical applications, particularly in quality control, which in turn led to fundamental advances in theory. An outstanding example is sequential analysis. The end of the war found a remarkable change in outlook at the Universities. No one now questions the respectability of statistics as a subject in the mathematical curriculum; a number of good text-books on mathematical statistics have been produced; the demand for methodological instruction on behalf of biologists (including students of medicine), psychologists and to some extent physicists and engineers has greatly increased; and workers in applied economics find that they need more help than ever from the mathematical statistician. There has been a big demand, which it has been difficult to satisfy, for university teachers of statistical theory in mathematical faculties and of applied statistics generally; for statisticians in government, whether as recruits to the newly established statistician class or as mathematicians to do statistical work in scientific research; and for statisticians in research establishments and in business.

3. The demand has tended to focus attention on the teaching that is required, and on how this should best be organized in Universities. Professor Harold Hotelling, in an address on the teaching of statistics to the Institute of Mathematical Statistics in the United States (*Ann. Math. Statist.*, 1940, 11, 457), was critical of the current teaching in that country, and made a detailed study of the organization best adapted, in his view, to bring about an improvement. A few of his points may be quoted: (*a*) A specialist in statistics on a university faculty has a three-fold function—(i) teaching, (ii) research, (iii) advice to colleagues and other research workers regarding the statistical methods appropriate to their various investigations; (*b*) the elementary teaching of statistics must be in the hands of really competent mathematical statisticians, but the solution of handing the whole thing over to the department of mathematics is doomed to failure if the

CC-0. In Public Domain. Gurukul Kangri Collection, Haridwar

Digitized by Arya Samaj Foundation Chennai and eGangotri



teaching is put under the jurisdiction of those who have no real interest in it; (*c*) a department of statistics should do all the elementary instruction, and courses in other departments should be confined to applications of basic theory; (*d*) the sequence should be calculus, statistical theory, applied statistics, in that order, although useful statistical tools can be acquired, under proper guidance, even without calculus, but "the task of leading the blind must not be turned over to the blind."

4. The Committee of the Council on the teaching of statistics in universities and university colleges carried out a preliminary survey to gather material for their report (*Journal*, 1947, 110, 51), and in so doing found large differences between the universities, not only in the amount of statistics which was taught, but also in the way in which the teaching was organized. This second question is of very great importance, particularly at a time when a big demand coincides with a shortage of qualified teachers. It has rightly, therefore, been stressed in the Council's report, and is one of the points on which discussion will be welcomed in a gathering which forms a convenient occasion for the "consumer's" point of view to be brought to the notice of the "producer." But before going on to outline a few of the points which might usefully be discussed, it is relevant to mention that two further committees have been at work on the subject. One, the Committee on Applied Mathematical Statistics of the National Research Council, was established in 1943 "for the purpose of considering problems of broad interest and rendering advice in the domain of applied mathematical statistics—the methodology of statistical analysis as contrasted with the gathering of statistical data." It operated through a number of sub-committees, and in 1947, shortly after our own report was published, issued a report entitled "Personnel and training problems created by the recent growth of applied statistics in the United States" (*National Research Council*, Reprint No. 128, May, 1947). The Chairman was Luther P. Eisenhart, and the secretary Samuel S. Wilks, and there were eight other members. The other is a Committee on the Teaching of Statistics of the Institute of Mathematical Statistics. The chairman was Harold Hotelling, and there were four other members. Its report has been published in *Annals of Mathematical Statistics*, 1948, **19**, 95; Professor Hotelling before this prepared a summary of conclusions which appeared in *The American Statistician*, 1, No. 3, December, 1947, p. 8. These committees will be referred to respectively as the N.R.C. and I.M.S. Committees, and below will be found short summaries for comparison with our own report, the second taken from *The American Statistician*.

5. *N.R.C. Committee.*—After referring to the unprecedented growth of interest in the use of statistical methods, and to the shortage of adequately trained statisticians and of training facilities for mathematical and applied statisticians, the following conclusions were reached:

A. *On undergraduate training in statistics*

(1) There should be developed a basic introductory course in statistics at preferably the freshman level for colleges and universities throughout the country.

(2) The laboratory work in the average course in statistics is inadequate, particularly at the elementary level; experimental work should replace much of the computation at this level.

B. *On the organization of statistics in a college or a university*

(3) The minimum requirement in effective organization is a central statistical laboratory with which all of those teaching or doing research in statistics would be associated, even though informally in some cases.

(4) More success is to be expected from a department of statistics associated with a statistical laboratory, and having some members in common with other departments.

C. *On advanced training in colleges and universities*

(5) The number of institutions needed for giving first-class training through the graduate level are: (*a*) 5 to 10 in mathematical statistics, (*b*) 25 to 30 in varying fields of applied statistics.

(6) An institution giving complete training in either mathematical or applied statistics should give some training in the other.



CC-0. In Public Domain. Gurukul Kangri Collection, Haridwar

Digitized by Arya Samaj Foundation Chennai and eGangotri



(7) Institutional stipends for graduate students specializing in mathematical and applied statistics are inadequate.

(8) In strengthening its statistical work at the advanced and research levels any given university should consider which field it can develop most effectively, so as to avoid duplication and inefficiency from a national point of view.

D. *On post-graduate training*

(9) The immediate critical shortage of highly qualified teachers can be eased only by suitable training of high-grade personnel now in fields of application, or in mathematics.

(10) An adequate number of post-doctorial fellowships in statistics is needed.

(11) Arrangements should be established whereby post-graduate students, research workers, and teachers on leave would be able to obtain work experience in certain government agencies, industrial laboratories, and business research organizations.

(12) To help offset the present critical shortage of qualified personnel in applied statistics, it would be desirable to promote conferences at advanced levels and short courses at the elementary level in various fields.

E. *On statistical training in secondary schools*

No conclusion is reached here, but the Committee say that definite advantages would result if certain aspects of elementary statistics were effectively taught in the secondary schools, although this will have to await the solution of the problem of teaching statistics in the colleges, and meantime the colleges should encourage the improvement of secondary school mathematics.

6. *I.M.S. Committee.*—The following is a condensed version of the summary of conclusions reached:

(1) Some knowledge of statistical method should be a part of a general liberal education and should be acquired by all college students.

(2) Additional instruction in statistics is needed by future users of statistics, such as business executives and government adminstrators, and still more by research workers of many kinds.

(3) A still higher level of study of mathematical statistics, with the necessary supporting mathematics, is needed by the future teachers of statistics, including especially the teachers of non-mathematical statistics, and by research workers in the theory of statistics and professional statisticians of high grade.

(4) The organization of the teaching of statistics should be in either a department of statistics or in an institute of statistics, which might include a service agency for practical statistics together with two departments, one giving instruction and carrying on research in the mathematical theory of statistics, and the other in techniques of applied statistics. Serious consideration should be given to the unification of the various statistical laboratories, and there should be a central statistical library.

(5) The first course in statistics taught each student should be in the department of statistics (divided into courses having calculus and only high-school algebra as prerequisites). After this there should be work in the application of statistical methods to various fields, done either in the department of the application or in that of statistics, but all teachers of such courses should be well acquainted with the mathematical theory of statistics as well as with the field of application. Advanced courses in statistical theory should be in the province of the department of statistics.

(6) Teachers of statistical theory and method should be scholarly specialists in statistical theory and method, not merely workers in one or another of the many fields in which statistics can be used.

CC-0. In Public Domain. Gurukul Kangri Collection, Haridwar

Digitized by Arya Samaj Foundation Chennai and eGangotri



(7) Teachers of statistical theory and method should currently engage in research in these subjects, since otherwise they are in danger of soon being left behind in the rapid progress of the subject and thus getting into the position of teaching the wrong things.

(8) The training of teachers of statistics should include considerable higher mathematics, and thorough study of the mathematical theory of statistics, together with practice in applied statistics. Post-doctorial fellowships and internships in government or industry are recommended, and the Committee suggest that the preliminary mathematics (including calculus) be taught at earlier ages—for example, in high schools as done in Europe.

7. Taking into account the difference in the educational systems on the two sides of the Atlantic, it is obvious that there are many points in common between the two American reports on the one hand, and our own on the other. Perhaps they may be best contrasted by setting out a few points, with comments, on which discussion is likely to be fruitful to-day.

(1) Should an attempt be made to introduce an elementary course of instruction in statistics into the normal curriculum of the secondary school? The R.S.S. report points to the need for a more widespread knowledge of the statistical approach, and considers that this may ultimately be met by teaching in schools. But the next generation of school teachers must first be provided with the right background. The N.R.C. report also speaks of the advantages of introducing statistics into schools, but says this will have to await the solution of the teaching problem in colleges.

(2) Should there be a general elementary course on statistics in the first university year for all students, as recommended in the N.R.C. and I.M.S. reports, or at least for all students in the social and natural sciences, as stated in the R.S.S. report? Are 10 lectures enough? How can the necessary practical work, including computation with calculating machines, be organized if the classes run up to several hundreds in size?

(3) What should be the nature of the ancillary or intermediate courses, and how many of them should there be? Should they be taken by most students of the social and biological sciences, as recommended in the R.S.S. report? Should a good knowledge of mathematics be required as a pre-requisite, or should the courses be divided between those studying mathematics along with their chosen science and those whose mathematics has not gone beyond, say, school certificate level? To what extent, in fact, can the methods of statistics be taught without mathematics? Is it agreed that all courses at the elementary and intermediate level should be taught by men with a competent knowledge of mathematical statistics, even if many of them are method courses (I.M.S. report)? Which of the intermediate courses are best taught in the department of the field of application? Fairly obvious ones are economic statistics and agricultural field experimentation. Are statistics in psychology and in medicine others?

(4) Should there be advanced courses in all universities or only in some, as suggested in the N.R.C. and R.S.S. reports? It would seem undisputed that mathematical statistics to an advanced standard should be taught for an honours degree in mathematics, and that where there is an active research school in statistics there should in addition be advanced courses in method. Important points in our report are that a profession of general practitioners requires the support of an inner circle of specialists, research workers and teachers, and that teaching at the professional level should be largely in the hands of the universities. With this may be coupled the need to provide the first part of the practical training required to give the experience necessary to make a good statistician. This means facilities for practical work, and the need therefore arises for statistical laboratories, which are in any case required to cater for the consultative aspect of the work of the university statistician. Is it desirable that different universities should specialize in different fields of application in setting up schools of research?

(5) How can the teaching of statistics be most effectively organized at a university? The I.M.S. report is clear as to what should be taught in a department of statistics, and hints that there may have to be two departments linked in an institute. But most of the universities of this country will have to decide to set up a department of statistics before the problem will arise of possibly combining two such departments. The same remark applies to the suggested unification of statistical laboratories. The R.S.S. report gives arguments for and against centralization. The real difficulty is that the growth of the subject as ancillary to so many main branches of study has

CC-0. In Public Domain. Gurukul Kangri Collection, Haridwar

Digitized by Arya Samaj Foundation Chennai and eGangotri



led to its being dealt with at a subordinate level in a number of faculties, and a unification in the interests of better teaching and greater effectiveness would cut across the strong faculty barriers that exist in most universities. A partial solution might be to set up an independent department within the science faculty, or group of faculties, in which case it would be desirable that this department be charged with the responsibility of providing teaching in the subject to the mathematical school, even if this school is in the arts group of faculties.

(6) What training in statistics is required for the government statistician at the higher levels? A recent notice of vacancies in the grade of statistician states that every candidate must have obtained a degree with first or second class honours (or the equivalent) in Statistics, or in Mathematics, Economics, or other appropriate main subject combined with Statistics (or if without Statistics must have been employed whole-time for at least twelve months continuously on statistical work). Preferences are stated for actuarial qualifications for the War Office, and for a degree in Statistics, or in Mathematics including Statistics, for the Air Ministry. On the other hand, the recent notice of the open competitive examination for recruitment to the Statistician Class states that the class has been set up to deal with the higher levels of statistical work in government departments, more especially in those statistical branches which have responsibilities in the field of policy, and that the work requires a combination of technical ability in the selection, preparation, and interpretation of the relevant statistics with a broad understanding of the nature of administrative problems. There are five compulsory subjects in the examination, of which one is statistics: the syllabus is very largely of the "descriptive" order common to courses of economic statistics, but adds a section on theory of statistics which implies that the mathematical theory required is elementary. A mathematician may be expected to choose Lower Pure Mathematics as his compulsory fifth subject, and Higher Mathematics as his option, but when we look at the syllabus we find that there is no statistics in the first of these, while in the second the only mention is "the calculus of observations, including probability," forming part of section 3. This has already put off a number of mathematicians at Cambridge, who see the necessity of supplementing their knowledge of mathematical statistics for the paper on statistics, but would like, as an offset, to feel that they could score in mathematics on the ground of specialist ability in mathematical statistics. Is there an inconsistency here between the two announcements, or are the Civil Service Commissioners working on an out-of-date syllabus in Higher Mathematics? It would be more in keeping with trends in mathematical faculties to-day if there were an entire section in Higher Mathematics dealing with the mathematical theory of statistics. It will be a pity if mathematical statisticians are discouraged from entering this new class, especially when there is a plain statement that such qualifications are preferred in at least one department. On the other hand, it is undoubtedly true that whatever the training value of a study of theory may be in the making of a statistician, there are many departments where the statistician will find little or no opportunity of using his mathematics, and where it may be argued that there is little need for a knowledge of mathematical statistics. The examination standard in statistics is roughly that of our Society's Certificate, although the syllabus is not so detailed and there is no mention of practical exercises, but our Examinations Committee contemplate the establishment of a Diploma which will undoubtedly require a much higher standard in the theory of statistics. Are the future holders of such a Diploma to be regarded as too good for the Statistician Class?

(7) What kind of training is best for the statisticians required in such numbers in business and research organizations? Complaints have sometimes been heard that the universities do not turn out fully-fledged technicians with all the experience required to make them of immediate use to the organization. With all due respect, such is not the function of a university, although something can be done, as indicated in the R.S.S. report, to provide the initial stages of such training, which would be improved if wider opportunities were available for the students to do vacation work in a number of organizations which are developed to give practice in the use of statistical methods and tools. One of the troubles to-day in the filling of appointments is that the organization is often looking for its first statistician, who will eventually develop a department into which trainees can be absorbed, but who to start with may not get very much guidance from the management on the nature of his duties. Experienced statisticians are exceedingly scarce, while the university graduate is regarded as lacking experience, and is the first to admit that what he needs is some kind of initial cadetship during which he can train to become a successful

CC-0. In Public Domain. Gurukul Kangri Collection, Haridwar

Digitized by Arya Samaj Foundation Chennai and eGangotri



performer. This brings up two questions. One is the need for extra-mural courses, referred to in the R.S.S. report, designed to give some training in statistics to the large numbers of persons now working in the subject who may desire it, and who have passed beyond the university stage. It may be hoped that the universities will give favourable consideration to instituting such courses where they are not already in existence. The other is not domestic to the subject of statistics, but concerns the question of whether universities can give training in the principles of administration, and if so whether there ought not to be a considerable extension of this field of activity, which would have the effect of turning out graduates better equipped for government and business posts of an administrative or quasi-administrative character, and more confident in their ability to do well on entering this sphere.

(8) Enough questions have been asked in the preceding paragraphs, to keep a discussion going for a long time, provided they are considered worth discussing. Others will no doubt have additional topics to bring up.

The PRESIDENT said that some four years ago the Council decided that the time had arrived when a survey should be made of the whole field of the teaching of statistics. It appointed a Committee under the Chairmanship of Professor E. S. Pearson to carry out this work, and the Report of that Committee was adopted by the Council. It appeared in Part I of the *Journal* for 1947, and was also on sale as a separate offprint at the cost of 6*d*. It was felt, however, that at some convenient time the Report of this Committee should be submitted for discussion by the Fellows generally in order that they might make their comments. Accordingly they had as the main item of their meeting that evening a discussion on the teaching of statistics which the Council had invited Dr. John Wishart to open. A proof of Dr. Wishart's remarks had been handed to members on entering the room, and it seemed appropriate to observe that the very modest reference in the first few lines to a paper read before the Society on this subject in 1939 was actually to a paper by Dr. Wishart himself. The Society was very fortunate in having him to open the discussion.

Professor PEARSON: I am sure that we are all very grateful for the trouble that Dr. Wishart has taken in preparing his interesting opening statement for this discussion. He has for a long time taken a special interest in this matter of the teaching of statistics, and it is perhaps opportune to mention that he was responsible for a great part of the spadework involved in collecting and sifting the information upon which the Teaching Committee based its Report.

On a number of the outstanding questions which Dr. Wishart has raised regarding internal university organization, many of us teachers must admit that we have as yet no clear answer. We are going through a period of intensive experiment—we find that more departments or faculties are asking for ancillary courses than we can provide for, that more students are taking the subject as a full-time course than ever before, and that, on top of this, we are asked to give a series of evening lectures to persons at work during the day. In this formative stage we, the "producers," are exceedingly anxious for the views of the "consumers," whether these be within our universities—engineers, biologists, economists—or outside, in government, industry and business.

Those of us who were members of the R.S.S. committee have co-operated to give in the Report our considered views, and we have not, perhaps, much more to add to the discussion at present. There is, however, one point on which I should like to make some remarks. By presenting the views of the two American Committees, Dr. Wishart has given rather special emphasis to the mathematical aspects of the subject. Now I daresay we are most of us agreed that a man who can couple

(*a*) a profound knowledge of mathematical theory, with
(*b*) the qualifications of a first-class practical statistician,

is right at the top of the statistical tree. But how many people in the world of statisticians to-day do combine these two qualities to the full, and what form of training will succeed in increasing their number substantially? The training for (*a*) presents no special problems if able mathematical students are available; but it is more difficult to devise a scheme of training which will develop in mathematicians the qualities needed in applied statistics. Let me put it in this way: the practical statistician, if he is true to his data, must regard his theory as a means to an end. He must remember, for instance, that an understanding of his material, a critical examination of its sources and reliability, and a sizing up of the essentials of a problem are often more important than the application of high power theory. He needs sound judgment, common sense, and a

CC-0. In Public Domain. Gurukul Kangri Collection, Haridwar

Digitized by Arya Samaj Foundation Chennai and eGangotri



power of conveying the basis of his conclusions to intelligent laymen in quite simple terms. Experience shows that many excellent mathematicians find some of these qualities hard to come by.

It is true that the American reports are primarily concerned that the *teachers* of statistics should possess high mathematical qualifications, but even here I think there is a danger of over-emphasizing the mathematical side. Thus section (8) of Professor Hotelling's summary of the Institute of Mathematical Statistics Report states:

> "The training of teachers of statistics should include considerable higher mathematics, with matrices and theory of functions as the extreme minimum requirement, and much more mathematics is highly desirable."

It is such teachers, the report suggests, who are required to form the staff of Departments of Statistics which are to be responsible for courses for elementary as well as for advanced students. I would say, yes, we need some of these people, but let there be others with a reasonable mathematical knowledge who are primarily chosen for their proved judgment in handling practical problems, for their understanding of the experimental outlook; men who are prepared to tell their students that when they get into a job many of them will have to forget a large part of the advanced theory they have learned except perhaps in their own personal research.

The I.M.S. committee report stresses the danger that the teacher without advanced mathematical knowledge will be left behind in the rapid progress of the subject and thus "get into the position of teaching the wrong things." Of course this may happen, but in this anxious seeking for the up-to-date I think there lurks the danger of introducing for its own sake a complex technique, where sometimes a far simpler treatment would lead to conclusions of equal practical validity. Even by standards of 20 or 30 years ago, W. S. Gosset was not a highly trained *mathematical* statistician, but he possessed all those qualities from which first-class practical statisticians are made.

In his paper of 1940, to which Dr. Wishart refers, Professor Hotelling suggested that the correct order of instruction was

(*a*) calculus,
(*b*) statistical theory,
(*c*) applied statistics.

I should agree in putting (*a*) first, but I am inclined to think that there is a very strong case for planning a course of instruction which introduces (*b*) and (*c*) together; this, in fact, is part of our problem as teachers. If we do not solve it, we run the risk of producing at stage (*b*) a class of statistical mathematicians, who have become so intrigued by the mathematical aspects of their subject that it is difficult for them afterwards to learn to regard (*b*) as the handmaid to (*c*), and that is a disadvantage even if they plan to teach.

Dr. Wishart has referred to the undoubted achievements of mathematical statisticians in war activities. But there was another side to the picture. Probably there are several of us who can recall a considerable number of reports, or appendices to reports, written on both sides of the Atlantic by mathematically trained statisticians, which were hardly more than a waste of the paper on which they were written. There were cases where the results of statistical analyses were simply put on one side because the practical man, whether scientist or service technician, shrewdly sensed that the theoretical treatment was either not needed, or was actually leading to conclusions which the data could not possibly warrant. The trouble usually arose because the mathematical enthusiast had allowed his theory to run away with his common sense or, perhaps, because he had never received an adequate training in the application of theory. It was true that biologists did extremely well in operational research; but their success often seemed due to the way in which an experimental training had taught them to handle data rather than to the fact that they mastered statistical technique quickly.

Now I don't mean from these comments that I think the statistician can do without mathematical knowledge. My call is for (*a*) mathematics plus (*b*) a good deal else. If you can't have (*a*) to the full, at any rate have (*b*). The tide is sweeping with us at the moment; but that puts on us a responsibility for the reputation of our subject, lest by over-emphasizing the power of mathematical concepts and technique, we run it into discredit.

Mr. P. Lyle: I cannot answer any of the many questions which have been put by Dr. Wishart, but as an industrialist I have been for forty years in touch with factory life and with scientists in general, and I should like to say that from the general point of view—this applies to all scientists as well as to statisticians—the main thing upon which we place weight is the ability of a man to get along with his fellow men. During those forty years I have seen technologists, chemists

CC-0. In Public Domain. Gurukul Kangri Collection, Haridwar

Digitized by Arya Samaj Foundation Chennai and eGangotri



and engineers working in harmony to the benefit of the firm and themselves, but I am afraid I have also seen the opposite—petty jealousies and so on, which work to the detriment of the firm and the peace of mind of the individual. The general efficiency of an industrial undertaking depends more on the ability of the technical staff to work together as a friendly team than on the academic qualifications of individuals.

With regard to the general case also I would support what was indicated by Professor Pearson on the writing of reports. We find that in general the standard is extremely low, and this should receive more attention at the universities. We try to bring about an improvement in this respect, by encouraging our technical staff to contribute articles to our technical house journal, which circulates privately in the firm. The fact that such an article will appear in print, in a more permanent form than the average report, at once makes the writer careful, especially as he knows that his script may be sent back with rude remarks by the editor.

The statistician is in a different position from any other scientist in industry, partly for the reason given by Dr. Wishart, that he starts with perhaps not much guidance from the management on the nature of his duties, but chiefly because he comes into a field where the languages of technology, engineering and chemistry are already well known and understood, while he himself speaks a new tongue. The difficulty there is quite considerable. Our chief difficulty seems to be not so much that he is speaking a new tongue, as that statistics differs from all other branches of applied science in a fundamental way. Factory people are all accustomed to the use of formulae of all kinds, and the characteristics of formulae can be very different. The ordinary formula which the engineer uses if, for example, he wants to calculate the strength of something for a particular job is a type of formula which nobody questions. We all subconsciously accept it without requiring to be convinced from first principles.

But if a factory technologist has completed a series of large-scale experiments and is reviewing his results, his conclusions are based on common sense, and he has great difficulty in understanding why anyone else should be better qualified than he to make a decision.

If, however, a statistician analyses the results and draws different conclusions and shows the technologist the formulae upon which his conclusions are based, he is using a type of formula which is *not* subconsciously accepted by everyone, simple because that formula is a result not of facts, but of a logical inductive argument, which is quite a different thing.

The result is that we have to undertake some form of instruction in the ideas of statistics, and our students consist of a heterogeneous collection of extremely busy factory specialists of all ages from 25 to 70 ! But it's a problem which has to be faced.

There seem to me to be only two solutions. Firstly, the very long-term solution referred to by Dr. Wishart, and in all of the reports from which he quoted, namely statistical instruction for all from secondary school age onwards, so that it forms part of a general education. That, however, is looking very far into the future, when we have got all teachers suitably trained.

Secondly—and this can hardly be called a short-term policy—statisticians should be taught, as part of their university training, how and what to teach in industry, and the success of such a venture would depend on *their* teachers acquiring a new technique, which would present many difficulties.

The problem is with us and deserves study.

In conclusion I should like to summarize the qualifications which to me seem desirable in an industrial statistician:

Firstly, in addition of course to being an expert statistician, he should, as Professor Pearson said, be a good enough mathematician to keep abreast of the latest developments in the subject, particularly when he finds himself, as he may well do, in some isolated factory without the advantages of university surroundings and contacts. Secondly, he must be able to write good English, and express himself concisely and convincingly. Thirdly, he should know how to teach others just enough of the subject to give them confidence in him and his methods. Finally, he must be capable of putting the team before his own position. We value that higher than an honours degree.

Mr. C. F. Carter, speaking as a teacher of economic statistics, said that a quick survey of Dr. Wishart's written paper would show about eighteen question marks, and he did not want to add to them appreciably, but only to point out where the emphasis necessarily differed when one was trying to teach statistics to economists. The need for teaching on different levels which had been mentioned in several of the reports was paralleled there, but in a slightly different way. They had first of all to turn out business men who were educated and intelligent in their appreciation of statistics, but who were always able to call in an expert when they needed any considerable

CC-0. In Public Domain. Gurukul Kangri Collection, Haridwar

Digitized by Arya Samaj Foundation Chennai and eGangotri



statistical work done. These people required an elementary course. But in addtiion to the course on elementary methods, there was needed an appreciation of the particular difficulties which attached to economic statistics when one came down to practical work.

Secondly, they had to provide for the needs of people who might want to make elementary use of statistical theory, but whose principal need was to have what might be described as a "nose" for statistics, people who knew by intuition or common sense when they were good or bad. A great deal of the statistical work of Government departments appeared to be of this nature, and it was said to be among the characteristics of the late Lord Keynes that he could instinctively tell good from bad statistics. That required a slightly higher level of comprehension. There were too many people who were satisfied with any figure obtained as a result of their work. There was some danger of the "nose" for good statistics losing its sense of smell. This seemed to show itself in the statistics of savings which were the foundation of this year's Budget, and which, in fact, were extremely bad statistics. They must, he thought, try to turn out business people who were not merely satisfied with figures, but wanted sound figures.

Thirdly, they had to provide for the statistical expert, whether in business or in Government, who must be a fully-fledged mathematical statistician. He thought that all these levels must be provided, if not at all universities, at all events at some of them, and that the second two required an adequate teaching staff composed of mathematicians who were also economists in their own right. That was not as rare as it might be, but he did not think they should be satisfied to leave such teaching either to the mathematician with little time for economics or, conversely, to the economist with little sympathy for mathematics.

That led him on to the plea that they should not try to impose upon our system of teaching in this country a tidy organization. In his view it was more important that the teacher of economic statistics should be recognized as an economist than that he should be recognized as belonging to a sort of statistical faculty. He was sure there was an opportunity here for the operation of the peculiarly British gift for making untidy compromises.

There was one further point which appeared to him to be rather serious. It seemed to him that the educational system in our schools produced either people who were good at mathematics, and who, if they were good enough, fortunately came under the care of Dr. Wishart and his like, or else people who had a fear and loathing of mathematics. There were very many people in between those two classes. There were few who were ready to say that they were moderately good at school at mathematics and were quite ready to go on learning. If they could be sure of having people coming to the university or to an extra-mural course with a basic knowledge of mathematics, their task would be immeasurably easier.

Mr. L. R. CONNOR paid a tribute to the hard thinking and solid work which had been done on this subject by Dr. Wishart and Professor Pearson.

Dr. Wishart referred to "a great development of industrial statistical applications, particularly in quality control." He would like Dr. Wishart to reconsider his wording. Industrial applications had now gone far beyond quality control, and it was only fair to say so. In para. 3 Dr. Wishart said that "the solution of handing the whole thing over to the department of mathematics is doomed to failure." He agreed that this solution invited failure, for statistics was an art as well as a science.

(*Para.* 5, A) The student should do more experimental work on material in the raw and less by way of tidying up exercises. People had to get rid of the idea that the statistician was interested only in figures, and that he could pass a competent judgment upon figures without reference to the facts behind them.

(*Para.* 5, D) There should be more fluidity between Universities, research organizations, Government departments, and industry. This, of course, was a general proposition, and had no specific reference to statistics.

(*Para.* 5, E) He did not favour statistics for secondary schools. The secondary school curriculum was overcrowded, and if any time could be spared, he would rather it went to woodwork, metalwork and drawing.

(*Para.* 7) (2) It was a waste of time to give elementary courses without facilities for practical work. That was where a great many technical institutes which claimed to give courses of statistics fell down. (3) In the teaching of elementary statistics the speaker preferred the numerical to the mathematical approach. There was a common confusion, in his opinion, between mathematical and numerical skill. (4) He favoured concentration on advanced courses on the ground of shortage of teachers and equipment. (7) Responsible industrialists did not now expect the universities to turn out fully qualified technicians. All they asked was that university teaching should move with the times. He would give an example of what he meant. He had to interview

CC-0. In Public Domain. Gurukul Kangri Collection, Haridwar

Digitized by Arya Samaj Foundation Chennai and eGangotri



a third-year student in mathematics who wanted a statistical post. He asked a number of questions and found out what she knew about analysis, functions of a complex variable, matrices, differential geometry, etc. For all these she gained good marks. Then he said to her, "when you do statistics you have to do a lot of computing. Have you ever done any computing?" She replied that she had not done any. Then he said, "We do computing by calculating machines. Have you ever used a calculating machine?" No, she had never used a calculating machine; in fact she had never even seen a calculating machine; but one of her friends in the chemistry department had promised her as a great treat to show her one next term!

In *Para.* 7 Dr. Wishart also mentioned vacation courses. Something was really being done there. A tentative scheme of vacation courses for students wishing to take up scientific and industrial work now existed in which private firms and Government departments were playing their part. Dr. Wishart referred to a "kind of initial cadetship." Again something was being done. The remedy was the organization of training courses within industry for men appointed direct from the universities. When a man came in from the university he went into strange surroundings. He had to learn the ways and language of industry; and the kind of thing that the speaker's own firm were contemplating was a centralized course of 6 to 9 months which would be attended by the newly appointed graduate as a preliminary to giving him a substantive post.

Research work in industry and elsewhere was now done by teams of specialists in which every member was supposed to interest himself in the problem as a whole as well as in his own particular part; and if the problem was statistical or quasi-statistical then it would be necessary to include a statistician. The whole idea of segregating the statistician, and only bringing him in like a sanitary inspector when there was a bad smell, was just out of date.

The speaker's conclusion was that any university graduate who wished to take up scientific or industrial statistics should try to cultivate a wide scientific outlook as opposed to a narrow specialisation. It was surprising what a number of technical questions cropped up when statistical problems were being considered—such questions, for instance, as the molecular structure of high polymers and the theory of black-body radiation, to name two recent cases. Statistical specialisation tended to create a vested interest in particular methods. Surely no one would employ statisticians and do all the work required to get a statistical solution if he could get it in any other way. The statistician was particularly liable to infection by the specialist virus, and ideally he would like every statistician to command an alternative profession so as to give the necessary balance to his outlook.

His last suggestion was that university courses in statistics should be widened to cover certain analogous fields. Many firms would bring a man in as a statistician, and then be disappointed if he could not solve problems which lay outside the particular sphere of statistical methods. There were problems in industry, e.g. instrumentation and the theory of servo-mechanisms, which had a quasi-statistical character in which the statistician might very well interest himself, but if he was to do so he must widen his general background.

Mr. W. PERKS said that he was not competent to talk about the teaching of mathematical statistics or about the teaching of teachers. He spoke as a practitioner, and as one concerned with the training of a particular group of practitioners, namely, actuaries. He was encouraged to offer a few remarks after hearing the very penetrating observations by Professor Pearson, practically all of which would be heartily endorsed by every actuary of his acquaintance. Actuarial science had from the beginning been grounded in probability theory, and had depended on the wide use of sound, if not very precise, principles of statistical inference. The proof of the pudding lay in the success of the great insurance institutions which had long had the benefit of actuarial guidance.

This was not the time to discuss the other vital aspect of their work, namely, the impact of the ever-changing economic and social conditions, but there should be no misunderstanding that probability and statistics were only part of the story. From time to time it had been necessary for actuaries to consider how far they should go in including general statistical theory in their training. The sequence which had been mentioned—calculus, statistical theory, and applied statistics—was fairly common ground, but the question was, "How much calculus and how much statistical theory?" For purely actuarial work and the statistics of such a business as the industrial insurance company with which he was connected, which had many millions of policies in force and employed thousands of full-time agents, or for business statistics in a wider sphere, they must, and indeed did, have a good grounding in probability, large sample statistics and the principles of statistical inference. But what about the huge edifice of small sample theory? There were some in the actuarial profession who were exceptionally mathematically minded, and who would like to include large doses of small sample theory. On the other hand, there were practical men who could see little use for it. Both views, he thought, were wrong. What was wanted was a

CC-0. In Public Domain. Gurukul Kangri Collection, Haridwar

Digitized by Arya Samaj Foundation Chennai and eGangotri



sufficient acquaintance with the principles of small sample theory to provide a proper background to the work, and to the use of simple approximate methods, which were so often all that was necessary for practical work. It was a remarkable fact that in the vast literature of the modern developments the numerical illustrations were so often trivial in character.

He had again and again found that simple approximate methods led to the same judgments or the same doubts as the more elaborate methods given in the text. Moreover, in actuarial work and in business statistics the theoretical models were rarely, if ever, more than rough representations of reality, and conditions were always changing, with the effect that exact methods might commit the sin of spurious accuracy. It seemed to him that mathematical statisticians were often in danger of overstating the case for the practical utility of modern theory and technique.

On the other hand, the practical men ran the risk of continuing to "practise the errors of their forefathers." He therefore pleaded for moderation in the training of practitioners and for toleration from both sides.

In his own copy of the paper, which had passed through several hands, a pencil note had been added by someone at the end of paragraph 3, which he thought summed up the position with regard to teaching. In this paragraph Dr. Wishart quoted the words, "The task of leading the blind must not be turned over to the blind"; the pencil note added, "Will the one-eyed do?"

On the qualifications required for statisticians in Government service he referred to a recent advertisement for the post of chief statistician of the Ministry of National Insurance. The advertisement confined the applications to the mathematical statistician class. It seemed obvious to him at any rate that the most suitable man for the job would be an actuary; at all events, it was ridiculous that the Government Actuary and the actuaries of the great industrial assurance offices should all be regarded, on the implication of that advertisement, as unsuitable.

Mr. A. W. SWAN said that speaking as another industrialist and "consumer" he supported everything that Mr. Lyle and Mr. Connor had said. He was an engineer in charge of a statistical department. Some months ago one of his assistants left him to go to the University of Sheffield as lecturer in statistics. He had to find somebody to fill his place. He knew that the fully-qualified statistician could not be obtained, because those who existed were already in good jobs. He applied to the universities for candidates, and received applications from a few who had taken courses in statistics. They knew what a standard deviation was, and so on, but none could answer the simple question, "what are statistics for?"

Industrial statisticians themselves they did know. They used statistics for a purpose. He thought he was quoting Mr. Kendall correctly when, in his book on advanced statistics, he defined statistics as the study of populations, and he would add to that, usually through samples. As far as he was concerned—he was in the steel industry—the idea of significance went through and through everything they did. They were tackling large numbers of things by simple sets of tests. The university candidate having failed him, he decided to look for a different type, and picked on a young man who had gained his B.Sc. in electrical engineering at Glasgow Technical College. This man had had a very good basic training in mathematics, and in a matter of eight months he had become a sound statistician. Only that very day he had been working out a very complicated control experiment. The other thing that he looked for in such people was a thing of which Mr. Lyle had spoken, namely, personality—something difficult to define. He heard it described the other day by the chemical term of miscibility—a capacity to mix. This young man of whom he had spoken had an immediate problem at their works. He had to tackle a rather rough customer who happened to be the head of the department, and he tackled him in such a way that presently they were calling one another by their christian names.

The statistician in industry had to interpret his statistics into facts. A young lady who had been training with him lately finished a job and brought it to him. "Well," he said, "that regression equation is correct, but it is no good to me. What I want to know is whether we should or should not use more charging boxes," which had been the object of the work. That was what the practical man wanted to know. Statistics must be interpreted in industry into practical facts.

Contact with industry was important for the statistician, and he was sure there were many firms other than Imperial Chemical Industries who would be willing to do their part. He had already told Professor Pearson that they would be willing to take men for summer training with the United Steel Companies in its various branches. If Dr. Wishart should be interested in such a matter it would be much appreciated. His previous assistant, the man who had gone to Sheffield University, was very sensibly keeping up his connection with his firm and using them as his laboratory—he was doing a job for them on blast furnaces.

CC-0. In Public Domain. Gurukul Kangri Collection, Haridwar

Digitized by Arya Samaj Foundation Chennai and eGangotri



In fact a sound grounding in mathematics was absolutely essential for the industrial statistician, but it did not matter whether this was pure or applied mathematics so long as there was a reasonable knowledge of calculus, and some at least of present-day algebra and the multi-dimensional idea.

Finally, he supported what had been said on this matter of computing. He suggested that in the training as statisticians in the university the calculating machine should come into the picture.

Mr. H. L. SEAL spoke as one of the group of users of statistics in Government departments. Dr. Wishart had mentioned this group in his opening remarks, and had wondered whether the methods of selection of statisticians employed by the Civil Service Commissioners were, in fact, adapted to the needs of Government departments generally. The speaker would echo this doubt and, to illustrate his point, would divide the statistical work done in Government departments into two broad categories : departments in the first category were concerned with the demographic and economic statistics needed for the government of this country, but there was another group of large government departments which required detailed and accurate statistical data of their own internal organization if they were to run efficiently as business concerns. He believed the Commissioners had in mind the former group of departments when they recruited statisticians into the Civil Service.

The second category of departments using statistics on a large scale had tended to be overlooked precisely because, up to the present, only one such department (the Admiralty) had made a case for having this type of statistical work done by professional statisticians organized in a single branch. He maintained that a broader, rather than a narrower, knowledge of statistical technique was required of statisticians working under these conditions than of statisticians employed in analyzing economic data, and would illustrate by referring to the four main types of statistical work encountered in the Admiralty.

The first type of work was concerned with population problems in the widest sense of the words; such problems as "mortality," "sickness," and "wastage" investigations in naval, civilian, aircraft, motor transport, etc., populations; and problems also of "promotion" with their attendant difficulties of definition of "equity," and the like. The second type of work was found in the supply organization: here problems of quality control were included with those relating to forecasts of consumption of spare parts. The third was concerned with the design and statistical analysis of scientific experiments. In some Government departments this kind of work was entrusted to the scientists themselves, mathematicians, physicists, chemists, etc., but, as he saw it, this had two disadvantages: (i) the rapidly developing modern techniques were likely to be unfamiliar to scientists trained in subjects other than mathematical statistics, and (ii) a scientist who had spent some years on this type of statistical work would find the normal avenues of promotion as a physicist, etc., blocked. The fourth, and final, type of work was the department's share in the economic planning of the country's resources : some departments (including the Admiralty) had responsibilities in this sphere and the statistician could be expected to play his part.

He concluded by asking Dr. Wishart's opinion whether the training of statisticians to undertake the kind of statistical work done in the Admiralty would be different from the kind of training envisaged for the statistician employed on large-scale economic planning work.

Professor T. W. ANDERSON said that he was the only American statistician present, and could not hope to defend the two American reports from all criticisms. It was clear from the paper and discussion that the problems of teaching statistics in the two countries were practically the same. He was surprised that the discussion emphasized the practical aspects so much, for his opinion was that English statisticians already have more experience in applications than the American. While using statistical methods on data was the purpose of statistical developments, a strong mathematical foundation was necessary for making developments in theory. In many American universities large programmes of courses in mathematical statistics were being arranged. Usually these courses were given in the mathematics department, but occasionally in a department of mathematical statistics. In some cases the problem of giving students adequate practical experience had been solved by use of a statistical laboratory.

Mr. J. I. MASON said that the art of statistics was not sufficiently stressed at present, owing to current emphasis on Fisherian methods of probability assessment. If these tests were analysed they would be found to assume that the experimenter is confident that all essential variables are "in" and that all other possible influences can be ignored. If a series of experiments are conducted at the $P = \cdot 05$ level in a random manner it should be borne in mind that one in twenty might be a "freak." If only one experiment is carried out that "freak" might well turn up. There

CC-0. In Public Domain. Gurukul Kangri Collection, Haridwar

Digitized by Arya Samaj Foundation Chennai and eGangotri



was need, therefore, for the statistician to appraise the results, and especially to check all the experimental conditions and the way the "numbers" have been derived from the subject matter's actual properties. It is feared that many valid hypotheses might be rejected by small sample work unless these principles were carefully stressed, as more and more careers depend more on bookwork knowledge. It was also very difficult with the presence of misleading, or misused, nomenclature in the literature for anybody outside statistical circles to appreciate what was meant by such phrases as "statistically significant," "best estimate," or "unbiased."

It should always be stressed that when Fisherian tests showed a "statistical significance" there were two possibilities. If a run of 12 number 7's turns up on the roulette table an unscrupulous or uncritical $\chi$-testing might "prove" the table was biased! Again, if in a tabulation a 7 has been misread for a 4 a $\chi^2$ significance might emerge. It rested on the true statistician to find out the true significance (i.e.—the need to correct an error in the controls, or to take a further sample before judgment) in these two examples.

Just as the assurance of full controls still cannot fully disprove a hypothesis, the absence of full controls cannot prevent the statistician drawing on outside knowledge to support his assessment. No statistical test can "prove" or "disprove" a hypothesis. It can only assist the statistician by "supporting" or "discrediting" his belief. These nuances were not often pointed out by the statistician or teacher, and when a practical man possessed some other information concerning the experiment, the statistical evidence had frequently to be repudiated or reassessed.

There was a need for the development of the critical faculty, and here the mathematical faculty could be of great value. The mathematician was trained to build up axioms and hypotheses from experience and observation. Statistics, too, had to be derived in number form from life, had to be worked on by logical processes and then finally to be interpreted. To work a Fisherian test on a case, say, where 10 men were treated with two drugs in order to assess which was the more potent, it was necessary fully to study the controls with the medical man. It might be found, e.g., that the second drug had in each case been taken on the second day, with a chance of interaction effects.

The theory of margins of error seemed taught purely on the basis of randomization of sampling from normal or Pearsonian populations, but statistical theory should not be confined to these fields merely because they were the only ones coming within existing mathematical techniques and prevailing concepts of probability. In practice sampling distributions varied widely from normality, because of some inevitable bias. In any event, randomizing did not preclude the chance of a "freak" sample turning up. It was often, paradoxically, the fact that the randomizing was biased which produced the good fit. Nor did randomizing guarantee the production of the true average, as so many seemed, to believe. Indeed, non-random methods sensibly devised, e.g. systematic, representative, or those purposively designed, on basis of prior knowledge, to try and hit the average (say, even a fruiterer testing apples he is buying), often gave a better chance of getting closer to the true figure when reasonable correlations existed between the variable understudy and the other attributes of the population being sampled. Common sense assessment was needed in both methods—a dying art which should be zealously cherished and guarded in the universities and the literature. If the theory of biased samples, on Edgeworth lines, could be developed, the theory of random sampling would be put in its proper perspective, and the new generation of statisticians would perhaps get a greater understanding of probability as a function of space and time.

Mr. MILBOURN, speaking as a worker in industry and not as a teacher, desired to offer remarks concerning the teaching of statistics in technical colleges, which was proceeding in several places at present. People already engaged in industry were seeking statistical knowledge, and were calling for courses in their local technical colleges. During the war several brief courses in quality control were given in conjunction with an expert consulting service, so that people inexperienced in such methods were prevented from making mistakes which would be to the eventual detriment of statistical methods in general. Such courses were no longer available, and, if sound teaching in statistics was not given in technical colleges, there was a possibility that statistics as a whole might come into bad repute in industry. With all due deference, he considered that the very short courses which were given in the United States during the war did lead by the end of 1945 to some bad statistics, in which the elements of statistical theory were not properly realized by everyone doing industrial work.

The problem of adequate training in technical colleges was an immediate one, and was of a different nature from the long-term problem outlined by Dr. Wishart. As the speaker saw it, and ignoring the economic field, of which he had no experience, there were three classes of work which should be covered by technical college courses. There was firstly, production control

CC-0. In Public Domain. Gurukul Kangri Collection, Haridwar

Digitized by Arya Samaj Foundation Chennai and eGangotri



based on quality control techniques, in which inspectors and junior grades of management were wanting some statistical training. Secondly, technicians, chemists and engineers were beginning to call for training in the design and analysis of experimental arrangements, not only in laboratory work, but also in development work in the production process itself. There was also a third class concerned with the interpretation of records which might, or might not, have been collected in the first place with the aid of a statistician. He had in mind, for example, such things as accident statistics, or the life of various ancillary equipment which might be used in manufacture. These three aspects required unified treatment, and they were linked by the need for reliable interpretation of results obtained statistically, so that they formed a sound basis for future action, which was very important industrially.

He thought he was correct in interpreting some remarks made by Professor Wilks in the United States as indicating a feeling that the best people for statistical work in industry would be those primarily trained in a scientific subject, such as physics, chemistry or engineering, who had the advantage of additional training in statistics. Such people would possess the necessary practical experimental background, coupled with a statistical outlook.

These remarks were prompted largely as the result of an approach made by the Central Technical College in Birmingham to the Birmingham group of the Industrial Applications Section. They were asked primarily to draw up a syllabus for a course in the Department of Industrial Administration, and secondly, to supply or suggest suitable lecturers. The first requirement could be fulfilled fairly easily, but difficulty had been experienced in finding suitable lecturers who had practical experience together with the necessary statistical background to cover all aspects needed in such a course.

The short-term, but immediate, problem of ensuring adequate statistical training in technical colleges might well be considered by the Society.

The following contributions were received in writing:

Dr. B. P. DUDDING (who expressed his regrets at not being present): The Council has done well to promote this discussion, and those who prepared the Society's Report should receive the thanks of a much wider public than can attend the meeting. As one particularly interested in the everyday use of statistical methods as production tools in the manufacturing industries, I wish to direct attention to those sections of the Society's Report on "The Teaching of Statistics in Universities and University Colleges" which deal with the need for a more widespread knowledge of the statistical approach to the study of data and the need for training in statistical methods of students in all branches of science and engineering.

The real problem is the provision of teachers, for progress in those quarters where interest has been stirred is severely hampered by their dearth. I think the trained statistician associated with the college or university is not likely to provide what is necessary in the immediate future. In order to appeal to the trained personnel of industry, teachers with actual manufacturing experience are necessary. The approach to the subject should be by the inculcation of principles and training in methods illustrated by practical examples rather than by instruction in the mathematical basis of those methods. An acceleration of the provision of a vitally important service to industry could be achieved if arrangements were made for men having first-hand industrial experience to give courses of lectures at a number of technological colleges and at universities, and for lecturers normally engaged in teaching science and technology to attend. By these means it would be possible for the lecturers to graft on to their normal courses some elements of statistical methods, particularly in connection with the scrutiny and comparison of results of experiments carried out in the practical classes of the course. This procedure has been followed in the Engineering and Glass Technology Departments of the University of Sheffield, where I have given lectures for six years. Through this medium students have gone into industry having a knowledge of how statistical methods can be used to aid the technical control of industrial processes, and to plan investigation on a proper basis when wishing to introduce technical modifications to existing processes.

I hope this meeting will do something towards the active stimulation of practical action, for I am convinced that the application of statistical methods to aid production efficiency can give real assistance to the solution of production problems which confront the country.

Mr. E. THORNTON-BRYAR: Owing to the shortness of time and the diffidence natural to a student among the learned gathering I did not contribute to the discussion of Dr. Wishart's paper, but there are some points which I should like to raise.

Firstly, the discussion has centred on the producers (teachers) and consumers (employers) of statisticians without much reference to the vehicles (students). I think the student should be

CC-0. In Public Domain. Gurukul Kangri Collection, Haridwar

Digitized by Arya Samaj Foundation Chennai and eGangotri



considered, and I believe the suggestion of courses in statistics at high schools was too lightly dismissed. My reasons are two-fold:

(*a*) University teaching is of a type which leaves students without guidance. The teacher is usually a man of such talents that he cannot be spared to give slow methodical introduction in elementary matters and to correct exercises in detail. In some colleges the tutorial system is virtually non-existent. In statistics, Mr. Yule has said, the only way to learn is to do hundreds of examples. Unless universities are prepared to employ patient teachers in classes of long duration, the elementary stages would be better tackled in schools and the basic concepts drummed in between algebra and calculus.

(*b*) In the social sciences students tend to specialize in subjects which represent a continuation of work begun at school. An investigation has shown that there is serious shortage in the labour market of social science students who have specialized in psychology or statistics and a surplus of specialists in geography, history and kindred school-continuation subjects.

At Cambridge the teaching of statistics under a residential and tutorial system works well. But in general Professor Pearson's case for some methodical, painstaking teachers as well as brilliant researchers and lecturers is manifestly valid from a student's point of view.

Since there is such a variation in teaching statistics as between universities and even between different colleges of the same university, it might be a good thing for the science if an agreed first-year course could be settled for matriculation. If this resulted only in standardization of notations and definitions, such a course would seem justified, but I submit that such a measure would also result in an increase in the number of students prepared to make statistics their main subject. With a bigger stream of competitors more and better statisticians are likely to come to the top. At the same time this would provide people to fill the intermediate posts.

I am glad to note that the Society's report deals with the points raised here. But I wonder if its conclusion that the need for more statistical knowledge should "ultimately" be met by teaching at school level meets the urgency of the problem.

Mr. R. D. Clarke: There is a danger that people who employ statisticians may make two incompatible demands upon the universities. They may call for the inclusion of practical training in the syllabus ; and they may also ask that more balance and less specialization be introduced into statistical education. Both demands have been voiced in this evening's discussion. If, however, the universities extend their syllabus to include practical work, they will automatically encroach upon the time which might otherwise be available for broadening the education given to the student. I hope that the universities will resist any suggestion that they should degenerate into centres of technical and vocational training, and that they will maintain their liberal tradition by endeavouring to give every student some acquaintance with the humanities. By this means they can foster qualities of mind from which later on will develop the judgment and common sense which Professor Pearson has stressed as so necessary in all statistical work.

Employers of statisticians should recognize that every recruit from the universities must begin his career with an apprenticeship, not only in computing, but also in the practical experience of handling data in the raw. Until this apprenticeship has been served, no one can be a fully effective member of a statistical department, but it is not reasonable for employers to expect the universities to relieve them of what is really their own responsibility.

I deplore the antithesis which has been drawn this evening between the mathematical statistician and what has been called the practical man—by which I suppose is meant a man qualified in methodology and technique rather than in theory. Both types are necessary in a statistical department of any size, the mathematical expert acting as consultant to the other practitioners, who in their turn will normally be in contact with the users. Between the two classes of worker there should obviously be, not conflict, but team-work ; and the teachers of statistics should, when planning their courses, recognize the existence of both types and cater for the needs of each.

Mr. W. R. Buckland: The subject discussed at a previous meeting of the Study Section is very similar to that now occupying the Society, and it may therefore be appropriate to record here some of the views expressed at that meeting.

A view which received wide support was that a high level of basic training was required whether a statistician was to be a "tool-maker" or a "tool-user." In the case of the "tool-user" it was necessary to combine this basic training in statistics with some other subject which would afford the background of one of the main fields of application, e.g. economics, biology, engineering. Closely allied to this was the view, indicating the present level of demand for statisticians, that the main duty of the teaching organization was to produce a flow of statistical "G.P.'s." This was essential, since the newly qualified statistician often would not remain in the first employment

CC-0. In Public Domain. Gurukul Kangri Collection, Haridwar

Digitized by Arya Samaj Foundation Chennai and eGangotri



secured. Freedom of movement within the chosen field of application implied an adequate training as a "tool-user," while the presence of a good basic training in statistics provided a foundation upon which to build a knowledge of specialized techniques pertinent to the immediate task in hand.

On the side of the teaching organizations it was felt that the most useful thing would be to change the method of teaching mathematics in schools. There was also the view that the subject of statistics could be usefully taught as a collection of useful tools capable of exerting some considerable influence upon the individual's outlook on current affairs. At a slightly lower level, much still remained to be done in the training of computers and other grades of staff needed in statistical departments. It was also suggested that the administrator needs some instruction in the working of the statistical machine and the lines of a statistical argument. But in this the administrator can be helped by the statistician who has mastered the art of appreciating his data and analysis in terms which provide a clear guide to the administrator. This required the development of the critical faculty, which is not an easy task during the training stage.

Dr. WISHART said that for those who were interested in this subject of the teaching of statistics the literature was rapidly growing. There was, for example, their own Report, and also the fairly extensive reports from the other side of the Atlantic to which he had alluded in his paper. To those must now be added the substance of what had been said that evening, all of it very interesting to listen to, and quite a lot of it meriting serious consideration. If he was to add at the end a summary of the discussion he felt that it must be a carefully considered summary, taking account of all the points in a way almost impossible to do during the actual progress of the discussion. Therefore he contented himself with thanking those who had referred to his own contribution in favourable terms—there had been very little which could be described as critical—and he would defer any comment upon the discussion until it was possible to put it in writing.

Dr. WISHART subsequently wrote as follows:—

In spite of the large number of question marks in Section 7 of my opening remarks, commented on by Mr. Carter, it cannot be said that the discussion has concerned itself to any material extent with answering the questions there raised, except for the last one on the training required for statisticians in business and research organizations. This is but natural, for it was the producer (of statisticians) who opened the discussion, and the consumer (for the most part) who replied. In summarizing the discussion, therefore, I must abandon my seven headings, and concentrate on the main points put forward. Broadly these may be said to cover the kind of training the statistician needs, and the way he is expected to behave when he gets down to work. There is a considerable measure of agreement on the necessity of practical as well as theoretical training being given by the universities. It may surprise Professor Anderson that the discussion emphasized the practical aspects so much, but this has always been a feature of British statistics, and may account for our having more experience in applications than the Americans. After all, it was largely the mathematical statisticians who founded the Industrial and Agricultural Research Section of the Society, with the object of concentrating on those aspects of theoretical statistics which had important practical applications. This has now become two Sections, the Research Section and the Industrial Applications Section, with its groups throughout the country. A feature of the former, however, is that it still puts applications very much in the forefront, as can be seen by a glance at the papers read since the war, and quite a number of its members also maintain an interest in the work of the Industrial Applications Section.

I agree wholeheartedly with Professor Pearson and the others who laid stress on the need for acquiring the qualifications that make a first-class practical statistician. The teaching requires a great deal more than is implied in an ordinary mathematical degree course, even if that includes statistics, and this demands rather special qualifications in the teacher. As in many other subjects, the university teacher is now expected to be more than a retailer of theoretical knowledge. While agreeing with Mr. Clarke that universities should not degenerate into centres of technical and vocational training, I would say that the teacher should know what the statistician is expected to do in after life, and should have regard to the fact that the main aim of the student is to prepare himself for a statistical career. We want enough of the right kind of teacher; given this, a great many of the desiderata laid down tonight will automatically follow. Applied statistics should certainly be included in the "good deal else" which, according to Professor Pearson, should go with mathematics. To give an instance, it is now possible for a mathematical graduate at the University of Cambridge to take a one-year Diploma in Statistics, during which time he will be attached to a department where practical statistical work is done, and will be examined finally on his work in the chosen field of application.

In answer to Mr. Connor, my wording in section 2 referred to war-time developments, and implied that industrial applications had now gone well beyond quality control. At Cambridge

CC-0. In Public Domain. Gurukul Kangri Collection, Haridwar

Digitized by Arya Samaj Foundation Chennai and eGangotri



we try wherever we can to give facilities for practical work, and these always include handling a calculating machine. A difficulty will come if, as seems likely, elementary courses such as indicated in my section 7 (2) are introduced for large numbers of students as part of their general education, for then there will not be enough calculating machines to go round, and the supervision of practical work will be no easy task. Mr. Connor is against statistics being taught in schools, a course favoured by Mr. Thornton-Bryar and Mr. Buckland. It is possible to revise a curriculum without over-crowding it, and some of the concepts of statistics could with advantage be taught as exercises in arithmetic and algebra. There is now a syllabus for statistics as a subsidiary subject of the Higher School Certificate Examination. In regard to vacation courses, no official scheme exists, but I gladly take this opportunity of acknowledging publicly the co-operation extended by government departments, research institutes and business firms who have responded to my request for facilities for students, and have already had some through their hands. Mr. Connor's last point is an interesting one, and is to some extent answered by the Diploma course to which I have already referred. But we must go carefully. A physical scientist, a biologist or an engineer can, with advantage, take a course on statistics, but his training must be primarily that required to turn out a good physical scientist, biologist or engineer. Now, since it is agreed that the real statistical specialist must be a mathematician, we must equally emphasize that his primary training has the object of making him a professional mathstatist.* There is, then, a limit to what he can study on top of this with an already over-crowded university curriculum.

Mr. Seal asked a question about the training of statisticians for government work, with special reference to the interesting analysis he made of work done at the Admiralty, work which, however, seems to me to be equally needing attention in most government departments. It may comfort Mr. Perks to know that the Admiralty assessed its requirements for statistical branch personnel as two-thirds actuaries and one-third mathematical statisticians. Mr. Seal is believed to favour as actuaries those who started by taking a mathematical degree. I would say in reply that the two broad classes of work to which Mr. Seal has referred require on the one hand the mathematician trained in statistics, with a dash of actuarial mathematics thrown in for good measure, and on the other hand the professional economist trained in statistical methods, the kind of man turned out by Mr. Carter. These are, in fact, the two classes of recruit contemplated in the official announcements relating to the statistician class. I do not want to be drawn into defining the qualifications needed for the post of chief statistician to the Ministry of National Insurance. He should, of course, be a statistician. Undoubtedly, actuaries are needed in this Ministry; there may even be, for all I know, a chief actuary, but it is possibly going too far to suggest that the actuarial profession should provide the chief statistician. One thing I would say: it is undoubtedly easier for a mathematical statistician to become an actuary than for an actuary, particularly one without a university training, to become a mathematical statistician. We have long been accustomed to the mathematical graduate entering the actuarial profession at the age of 21 or 22, and then acquiring his professional qualifications. In these days such a man may well have specialized in statistics before leaving the university, and will then be able to keep up with the work of the statistical specialists. I welcome the increased emphasis now being put on statistics as part of the actuarial training, but even the man who has devoted a lot of time to statistics can hardly hope to become a double specialist. We have to recognize, in fact, that there are two different forms of specialization here, in actuarial mathematics and in mathematical statistics, even if there is not as yet a chartered institute of statisticians.

Finally, Mr. Milbourn is concerned about the teaching of statistics in technical colleges. It should be stated that the Council's Committee, in their preliminary survey, gathered material from technical colleges and correspondence, etc. schools, and were not much surprised to find that the teaching, where it existed at all, was generally at a low level. The report we are discussing was confined to the position in universities and university colleges, but the problem remains with us none the less. The high level teaching at universities which are sufficiently developed to give courses in statistics up to the Diploma and Ph.D. levels is producing at present (*a*) university teachers, (*b*) specialist personnel for government departments, and (*c*) specialist personnel for research institutes and business organizations. In my experience it is not producing technical college or school teachers of statistics, largely because these are careers which do not appeal to men who have a wide choice at present of openings which they consider more attractive. Ultimately, as teaching spreads in all universities and a "buyers" succeeds a "sellers" market, things may tend to right themselves, but the pace is very slow at present, and there is the attendant danger

* We need a single word to describe the profession with exactitude and as "statist" is a good English word I take the liberty of adding a prefix ("I once did hold it, as our statists do, A baseness to write fair". —*Hamlet*, Act 5, Scene II).

CC-0. In Public Domain. Gurukul Kangri Collection, Haridwar

Digitized by Arya Samaj Foundation Chennai and eGangotri



that out-moded methods may continue to be taught by men who have not themselves had the right training. This brings us back to the need for books. I said in 1939 that a good mathematical treatise was needed. To-day there is a real need for methodological text-books, not so much of the specialist as of the tutorial order, for use in technical colleges and schools. We need didactic texts, dealing with modern methods and with plenty of examples, of the pattern of the standard college algebras and arithmetics. It is such books that, getting into the hands of busy college and school teachers who have not the time to get up the subject from the more formidable specialist works, and also of workers doing private study on their own, will do much to grade up the statistical level in the non-specialist population.

As a result of the ballot taken during the meeting, the candidates named below were elected Fellows of the Society:—

Harold Ernest Bishop.
Maurice Graham Blackburn.
Marjorie Elizabeth Brown.
John Henry Guy.
Michael John Romer Healy.
Eric Stanley Holliman.
J. E. Kerrich.
Francis Douglas Kelly Liddell.
William Little.
Nilratan Majumdar.
Ramkrishna Mukherjee.
Clement Shread.
Norman John Squirrell.
Clifford John Thomas.

*Corporate Representative*

Cecil Vernon Ford, *representing* The Society of Motor Manufacturers & Traders, Ltd.



CC-0. In Public Domain. Gurukul Kangri Collection, Haridwar

Digitized by Arya Samaj Foundation Chennai and eGangotri



## The Sources and Nature of Statistical Information in Special Fields of Statistics.*

### Medical Statistics

By Major Greenwood, F.R.S.

*Definition.*—The phrase Medical Statistics is loose and could be defined in many ways; for the purpose of this article I take it to mean that body of statistical data relating to the health of a group—a nation, a city, an occupation—which an intelligent citizen, *with* a taste for "sums," would wish to consult.

*Statistics of mortality.*—I shall begin with the data relating to mortality compiled by the department of the Registrar-General of England and Wales; the corresponding departments in Scotland and Northern Ireland are similar but younger and their methods differ in some details; but a reader who understands the English system will have no difficulty in using the publications of the sister departments.

The General Register Office of England and Wales is just over 110 years old, and its Annual Reports provide comparable gross rates of mortality, viz. ratios of annual deaths to estimated mean populations, over the whole period. It is also possible to compare the ratios of deaths under the age of 1 year to registered births (the infant mortality rate), and the rates of mortality in age-groups 0–4, 5–9, etc. (after age 25 the groups are decennial until age 85). It is also possible to compare rates of mortality from particular causes of death, but with less confidence, owing to changes of classification and increased precision of nomenclature.

*Causes of death.*—All students of official statistics who attend lectures are warned to read footnotes and introductions. That warning should be particularly heeded by students of medical statistics. Change of fashion in certification due to increasing knowledge may affect comparability. For example, between 1861–70 and 1901–10 the rate of mortality from Acute and Chronic Nephritis (inflammation of the kidneys) increased; the index number (usually called age standardized rate of mortality) for males increased from 153 to 435. In 1911–20 it fell to 406, and in 1921–30 to 303. It would be rash to infer that the "disease" increased and then diminished. A much more probable explanation is that after 1870 doctors increasingly spoke of nephritis, and eschewed certifying a mere physical sign—dropsy—which might be due to many diseases; and after 1910 they preferred to certify arterio-sclerosis, thinking, no doubt rightly, that the change in the kidneys was secondary to changes in the vascular system. To get on the track of that kind of book-keeping difference, the student should read not only footnotes but the introductory essays in the Annual Reports of the Registrar-General—well worth reading for their own sake, since the authors, e.g. Farr and Stevenson, to name only the dead, were masters of their subject. This may involve a little trouble—which is worth taking. One should *never* believe that a disease is becoming more, or less, deadly until all other explanations have been excluded. A particularly important break in continuity occurred in 1940. Where more than one cause of death is mentioned on the medical certificate, the choice of the assigned cause has since 1940 been determined in the main from the statements of the certifier. Previously it was determined by fixed rules of precedence. This has led to large changes in the recorded mortality-rates from certain causes of death, and makes comparisons pre- and post-1940 very difficult.

*Age and mortality.*—As the age structure of the population has changed greatly during the last 100 years, a comparison of gross rates of mortality may be just as misleading as a comparison of incomes. Even under a bad environment young people usually die at lower rates than old people living in comfort. Down to about 60 years ago, Farr met the difficulty mainly by commenting on the rates of mortality in age-groups and by making life tables. A later generation preferred index numbers, and the General Register Office has used several. To describe these in detail would take much space and be quite needless in view of Mr. Udny Yule's classical paper (*Journ. Roy. Stat. Soc.*, 1934, 97, pp. 1–72); for the Registrar-General's present comparative mortality index see his Statistical Review, Part I, for 1941.

* For the first article of this Series, see *Journal, Series A*, 1948, p. 133.

CC-0. In Public Domain. Gurukul Kangri Collection, Haridwar

Digitized by Arya Samaj Foundation Chennai and eGangotri



*Local mortality rates.*—So far I have spoken of comparisons of the medical statistics of England and Wales as a whole at different dates; can we compare the rate of mortality in, say, Manchester of 1841–50 and of 1921–30 by simply looking up the figures in the annual returns (or decennial supplements)? The answer is "No." When the General Register Office was founded, superintendent registrars of births and deaths were appointed for each registration district, and the district for these purposes was the union, parish or place for which a Board of Guardians was established by the Poor Law Act of 1834. Often the Clerk to the Board of Guardians was appointed superintendent registrar; the district was divided into sub-districts with a registrar for each. Sub-districts, grouped into districts, and districts, grouped into registration counties, were the statistical units, and continued to be so until 1911. After 1910 the units of grouping were administrative—counties, county boroughs, other towns, urban districts, rural districts. The practical advantage of this was obvious, but almost every reform brings some evil with it. Here the evil is a destruction of comparability. Before 1911 "Manchester" meant, statistically, the registration district of Manchester; after 1910 it meant the County Borough of Manchester; the two populations are by no means the same. To make comparison possible one must consult volumes 1 and 2 of the Census Report on 1911. The first volume contains the populations of administrative areas, and the second those of registration areas together with an assignment of these to administrative areas. It will then be found that the population of the County Borough is the sum of the populations of two Registration Districts, Chorlton and Manchester, and of five sub-registration districts, Cheetham, Blackley, North Manchester, Newton Heath and Bradford Heath. In the Annual Reports of the Registrar-General one can find particulars of the gross populations (persons only, not male and females separately) and deaths for sub-districts, but analyses by age and sex are available in published reports only for districts (in the Registrar-General's decennial supplements). There is a further difficulty; in most registration districts before 1911 deaths which did not properly belong to the district where they occurred were not debited to the district chargeable, but to the districts where they occurred. A person falls ill of, say, tuberculosis, and is sent to a sanatorium or a health resort, perhaps far distant from his home. If he dies there the death is, since 1910, transferred to the district of residence, while before 1911 it was tabulated to the place of occurrence. In 1901–10 the gross death-rate in London City Registration District was 46·42 per 1,000, and in Shoreditch Registration District 19·13. This does not mean that Shoreditch was a more salubrious residence than "the square mile," but simply that St. Bartholomew's Hospital is in the City, and 6,584 of the 9,189 total deaths in the City occurred in the Hospital. Appropriate warnings are given in the official publications, but it is easy to see that a private student might have some difficulty in allocating deaths in institutions. In fact a historical comparison of local rates of mortality is a difficult task if the student wishes to begin earlier than 1911.

*Occupational mortality.*—Of equal importance to regional mortality is occupational mortality, the development of which is one of the greater glories of Official Medical Statistics in England and Wales, and has been dealt with extensively at decennial intervals since 1851. Farr's original idea was quite simple—the simplicity of genius. The occupations of the dead (men) were recorded in death certificates, the living stated their occupations at the census. Why not take one-third of the number of, say, butchers who died in the three years of which the census year was the middle and divide by the number of butchers enumerated at the census? That principle has been followed ever since. But there are difficulties. In one very important occupation, that of the mercantile marine, the national census, which is a *de facto*, not a *de jure* census, does not provide a denominator for the fraction. In all occupations—even the civil service-employed persons do not "stay put." The butcher of 50 may have had a different trade at 40. One official medical statistician on retirement was ordained. Finally, a confusion of *industry* with *occupation* is easy. A typist in the Ministry of Health and a typist in Harrod's Stores are occupationally speaking in the same class; industrially speaking one is a civil servant, the other in retail trade. Many persons who are, industrially speaking, engaged in the manufacture of needles are in no more risk of going sick from "grinders' rot"—industrial silicosis—than a cabinet minister. Over the last generation the staff of the General Register Office have done their best to make the classification truly occupational, and in spite of difficulties have succeeded, but the inevitable price must be paid. Comparability is lost or injured. It would be quite as difficult to trace in detail the history of occupational mortality as to trace that of local death-rates.

In the last evaluation of occupational mortality a wholly new departure was made. The

CC-0. In Public Domain. Gurukul Kangri Collection, Haridwar

Digitized by Arya Samaj Foundation Chennai and eGangotri



mortality-rates of the wives of occupied persons were studied. It is hardly necessary to say that the rate of mortality in an occupation is affected by many things, of which the specific hazard of the occupation itself is only one. Of course there are dramatic instances; the cancer of chimney sweeps, grinders' rot, lead poisoning in the pottery industries are, or were, stock examples, in which the direct occupational hazard "sticks out a mile." But in the general run of occupations these are the exceptions, not the rule. Another, more important factor is economic or social-economic. In the latest investigation (1930–32) retail salesmen, etc., in dairy, meat, fish, etc., had an index number of mortality of 76 (the figure of 100 for all males is the base). Costermongers, etc., and newspaper sellers one of 149. But the difference is not likely to be *mainly* due to the greater exposure of costermongers to the British climate, but to the fact that the former group is in Social Class 3, and the latter in Social Class 5. Again, physical selection plays its part. Owners, Agents and Managers of Coal and Shale Mines are assigned to Social Class 2, and Hewers and Getters to Social Class 3, but their rates of mortality do not differ appreciably; it does not, however, follow that hewing coal and arranging for other people to hew coal are equally salubrious occupations.

The use of wives as controls, statistically speaking, led to interesting results, and the student should read pp. 73–5 of the Report (Part II*a* of the Registrar-General's Decennial Supplement for 1931, S.O. 1938). One finding may be quoted. Some causes of death increase as we pass down the social scale—these might be called "poverty diseases"; and there are others which decrease as we descend the social ladder—these might be called "diseases of affluence."

> "It is evident from a comparison of the balance of registered and standard deaths that the rather wider range of mortality from all causes with social class in married women than men, to which attention was called on p. 21, arises from the fact that the wives do not share to any considerable extent in the compensating disadvantages of affluence which men suffer, through an enhanced mortality from an important group of diseases. . . . Their greater survival advantage over men in the better circumstanced classes seems to arise because married women do not suffer the same penalties of a "comfortable" income (whether these have their origin in over-nutrition or a more sedentary life) as do men."

It was mentioned above that the mortality of seamen cannot be satisfactorily dealt with on the lines of other occupations. Those interested in this important subject should study pp. 173–8 of the Report.

*Notifiable diseases.*—So far we have considered only data of mortality, but the notification of cases of certain infectious diseases has been a legal obligation for more than 50 years, and the data can be used to calculate attack-rates, and as, of course, deaths must be registered, fatality-rates, viz., the ratios of the numbers of deaths to the numbers of cases notified. At present the Registrar-General's Annual Reports contain data of notifications for each administrative area for measles, whooping-cough, scarlet fever, diphtheria, puerperal pyrexia, enteric fever (typhoid and paratyphoid), erysipelas, acute pneumonia (primary or influenzal), cerebro-spinal fever, acute poliomyelitis, acute encephalitis lethargica, ophthalmia neonatorum and dysentery. For the more rare infectious diseases, e.g. smallpox, figures are given for the whole country. There is also a table of the weekly incidences of measles, whooping-cough, scarlet fever, diphtheria, enteric fever, cerebrospinal fever and poliomyelitis, which enables one to study the seasonal incidence of these diseases. For some of them figures classified by age and sex are published from time to time in the Registrar-General's Quarterly Reports. To the unworldly wise statistician—if he exists—it might seem that many other diseases should be notified—actually many more are notifiable than those used for detailed analysis by the General Register Office—but some people have doubted whether the list is not already too long. The object of notification is not, of course, to provide medical statisticians with material for working out sums, but to enable public health officers and doctors to arrest or limit the spread of the disease. It would be waste of space to point out the objections to the notification of venereal disease; even in diseases which carry no social stigma, notification may be incomplete. Notification of pneumonia was introduced after the great pandemic of influenza in 1918–19 in the hope of having a timely warning of the approach of a serious epidemic of influenza. This hope has not been fulfilled, for sometimes it has been found that the frequency of deaths from influenza has begun to rise before that of the notifications of pneumonia. *One* reason is the ambiguity of the term. Notification is limited to primary and influenzal pneumonia; the reason is that inflammation of the lungs is often a terminal disease,

CC-0. In Public Domain. Gurukul Kangri Collection, Haridwar

Digitized by Arya Samaj Foundation Chennai and eGangotri



i.e. it kills people weakened by some earlier changes. (In fact pneumonia has been called "the old man's friend.") It is not always easy to be sure that pneumonia *is* primary, and, as to influenzal pneumonia, a doctor may be more likely to notify it when he already has plenty of patients down with "flu."

*National Health Insurance statistics.*—Probably the reader will ask what use has been made of the sickness data accumulated in the past under the National Health Insurance Acts. The English General Register Office has not published any statistics obtained from this source. The Ministry of Health has used some, and the Department of Health in Scotland a good many. It would take far too much space to discuss the value and the limitations of the National Health Insurance data, but fortunately two papers published in the Society's journal provide the student who is not a specialist in the field with adequate information. The first is the paper by the late Sir Alfred Watson (*Journ. Roy. Stat. Soc.*, 1927, 90, 433–86). This paper does not discuss the medical causes or supposed causes of sickness, but is a general review by a great master of health insurance statistics. The next is by A. Bradford Hill (*Journ. Roy. Stat. Soc.*, 1929, 92, 183–238), and discusses the contributions of 15 causes, or groups of causes, of sickness to sickness rates; various occupations are also discussed, particularly that of printers.

The Department of Health for Scotland issued in the decennium before the war seven annual reports in which incapacity is analysed by cause, locality, age, sex and marital status (the latest covers 1936–37; the reports are published by the Stationery Office). The certified causes of illness are classified under 32 headings, and the analysis is as detailed as the data permit (in 1936–37 the estimated insured population of Scotland numbered 1,787,700—about 36 per cent. of the total population). For administrative reasons national health insurance data did not throw much light on trivial illness, when incapacity lasted less than 3 days, although trivial illness is far from being statistically or even medically unimportant. The Ministry of Health in England has recently used a sampling method, through the Social Survey, to measure the incidence of all sickness (see Monthly Bulletins of the Ministry of Health and the Registrar-General's Quarterly Reports for more detailed information).

*Medical Research Council Reports.*—So far attention has been confined to statistical material published by a central department of the State. Two research organizations financed by the State, the Medical Research Council and its Industrial Health Research Board, have published many reports of a mainly or largely statistical character. It would be presumptuous to single out reports which, in the present writer's opinion, are specially valuable, but as an example of the *kind* of report which the general statistical reader would find interesting, No. 227, "Epidemics in Schools" (pp. 289, published by S.O. 1938) might be mentioned. It is an analysis of the sickness experience over five years of a number of schools of different types—a considerable majority were public schools in the colloquial sense of the phrase, but one or two were schools educating children of what Victorians would have called "the lower classes." The comparisons of girls' and boys' schools are interesting, and as the Medical Research Council believed in team work, statisticians, doctors and laboratory workers collaborated, so that the subject is treated more generally than in most statistical reports.

*Reports of local authorities.*—Important medical-statistical data and analyses are also to be found in some of the reports of Local Authorities. It was mentioned earlier that a comparative historical study of health conditions in great cities based wholly on published official data may be a difficult or impossible undertaking. For some cities, London, Manchester and Glasgow are conspicuous examples, the Annual Reports of the Medical Officers of Health contain data and analyses of data of great value. It may be remarked that the Manchester authorities provided detailed and comparable statistics of Manchester over many years which, as we have seen, could not have been extracted from *published* official tables.

*International statistics.*—Finally, the student may be interested in international comparisons. In the first place it may be remarked that the official statistics of some foreign nations are of particular interest to medical statisticians. Most statisticians know that Sweden adopted an adequate system earlier than any other nation (see Greenwood, *Journ. Roy. Stat. Soc.*, 1924, 87, 493–543), and the vital and medical statistics of the Netherlands are famous. Swiss statistics are also of particular importance, because Switzerland was the first country to adopt a *strictly* confidential system of certification of causes of death (a good recent study of Swiss medical statistics will be found in G. Mentha's *Les causes de décès en Suisse*, pp. 240, Geneva, 1948). To encourage

CC-0. In Public Domain. Gurukul Kangri Collection, Haridwar

Digitized by Arya Samaj Foundation Chennai and eGangotri



statisticians who are not polyglot, it may be noted that all, or nearly all, European countries, the languages of which are not French or German, provide table-headings in French, German or English and usually summaries of the text in one or more of these languages.

In connection with foreign official statistics, the advice given earlier, viz. to read footnotes and introductions, must be emphasized. To take an example, there is sometimes a difficulty in interpreting statistics of stillbirths and neo-natal mortality. In some countries children who die within 3 days of birth are not included, as in England, under neo-natal mortality, because it is not obligatory to register a birth within the first 3 days after delivery. It would also, for a reason given above, be wrong to suppose that alcoholism is a more serious cause of death in Switzerland than in Great Britain. Then, although most countries now use the standard international classification of causes of death, that is not true of reports going back many years. It is, perhaps, hardly necessary to say that in some countries—France used to be a conspicuous example—the Hippocratic rule of professional secrecy strictly adhered to by the medical profession led to a very imperfect certification of causes of death. Two international organizations, the Health Committee of the League of Nations and the International Statistical Institute, used to publish compilations of statistics obtained from national statistical departments.

The publications of both are voluminous and there is a certain amount of overlap, but, broadly speaking, the Health organization dealt, statistically speaking, mainly with prevalence, or reported prevalence, of infectious diseases, the Institute with mortality—of course the Institute published very much more than statistics of mortality, but I am speaking from the medical point of view. On the whole the general reader will find the Institute's publications (all of which are in the Society's library) the more useful. A specially useful series is that of *Aperçus de la Démographie des Divers Pays du Monde*, of which the last covers 1929–1931.

The League of Nations work has been taken over and extended by the World Health Organization of the United Nations.

### *Conclusion.*

It is inevitable that, from a short study such as this, much which is important must be omitted, but enough may have been said to help the reader to find his way into the literature. Most statistics can be used and are used for propaganda; hardly any are used more frequently for this purpose than medical statistics, so the student is once again urged to scrutinize the medical-statistical arguments of very important persons with great care and to verify the statistics used. Only very foolish propagandists misquote figures given in official tables, but they *may* have overlooked footnotes or introductory comments.

CC-0. In Public Domain. Gurukul Kangri Collection, Haridwar

Digitized by Arya Samaj Foundation Chennai and eGangotri



# MISCELLANEA

## Percentage Inspection

By Pran Nath, M.Sc., D.I.C.
(Imperial College of Science and Technology, London)

A practice is growing up in the presentation of the elementary theory of sampling inspection for attributes, of beginning the exposition with an "exposure" of the "fallacy" of percentage inspection. Thus, for example, Grant [1] considers four sampling plans, each involving 10 per cent. samples, from batches of size $N = 50$, 100, 200 and 1,000. Assuming that a batch will be accepted if no defectives are found in the sample, (i.e. taking the acceptance number $c = 0$, which is usually the case with specifications for percentage inspection as followed in industry), he shows that batches which are 4 per cent. defective will be accepted 81 per cent. of the time by the plan ($N = 50$, $n = 5$, $c = 0$), 65 per cent. of the time by the plan ($N = 100$, $n = 10$, $c = 0$), 42 per cent. of the time by the plan ($N = 200$, $n = 20$, $c = 0$), and less than 2 per cent. of the time by the plan ($N = 1{,}000$, $n = 100$, $c = 0$); $n$ being the sample size. Grant concludes that a producer making product 4 per cent. defective would have a strong motive for trying to have his product inspected in lots of 50 rather than in lots of 1,000. He says that the scheme ($N = 1{,}000$, $n = 100$, $c = 0$) gives better "quality assurance" than the other schemes.

Our object here is to query the desirability of such an approach to the problem of batch sampling inspection (lot-by-lot inspection as some writers call it). No exception can be taken, of course, to the probability calculations in themselves (they are based on the Bernoulli approximation, but this is no serious matter here). What we do question is the *relevance and adequacy* of these probability calculations in the choice of a sampling inspection scheme. Although Grant makes no specific statement to this effect, the suggestion conveyed is, that if a consumer intends to inspect 10 per cent. of a product, and he has the option of taking his batch size to be 50, 100, 200 or 1,000, his best choice will always be 1,000.

The essential fallacy involved is, that the object of a sampling inspection scheme is taken to be the *rejection* of batches. What is brought out by Grant's argument is that the plan ($N = 1{,}000$, $n = 100$, $c = 0$) will reject more batches than the plan ($N = 50$, $n = 5$, $c = 0$). But the object of a sampling scheme of the type considered here is, in fact, to *sort* batches into "good" batches and "bad" batches, in order to accept the former, and to reject the latter.

In general, sampling inspection may have several objects. We may take routine samples from batches of goods from a given supplier, merely with the object of checking the general level of quality. In such cases we should, logically, either accept or reject the whole of the supplier's output; there is no virtue in accepting some batches and rejecting others. Another objective of sampling inspection may be to improve the quality of a product by replacing the "defectives" found by "effectives," as in the Dodge-Romig schemes. Such an inspection is known as "Rectifying Inspection." Here again there is no particular virtue in accepting some batches and rejecting others. But it is clear from the context in Grant's book that neither of these two objects of sampling inspection is involved in his example. What he is concerned with—and what we are concerned with here—is the use of sampling for "Acceptance Inspection," which is essentially an operation for *sorting* batches into acceptable ones and unacceptable ones.

From this point of view the frequency with which batches are rejected will not be an appropriate measure of the "quality assurance" given by a sampling scheme. We shall also want to know the frequency with which good batches are accepted—roughly, the higher this is, *ceteris paribus*, the better the scheme. In fact, in so far as any single number can be used to measure the "quality

CC-0. In Public Domain. Gurukul Kangri Collection, Haridwar

Digitized by Arya Samaj Foundation Chennai and eGangotri



assurance" given by a scheme, the number to choose will be the average quality of the batches accepted by the scheme,* the A.O.Q. (Average Outgoing Quality) as it is called.

From the point of view of A.O.Q., in the situation considered by Grant, a sampling plan in which $N = 50$, $n = 5$, and batches were *rejected* when the sample shows no defectives, and accepted when the sample gave 1 or 2 defectives, would be better than any of the schemes considered by him. For, by assumption, all batches have 2 defectives in them; if no defectives are found in the sample, this means that 2 defectives remain in the batch, while if 1 or 2 defectives are found in the sample, this means that only 1 or 0 defectives remain in the batch (assuming that the defectives found in the sample are removed). The absurdity of this result brings out the fallacy of considering the merits of an acceptance inspection scheme, when the incoming batches all have the same quality. The point has been emphasized by Barnard [2] that the solution to the problem of Acceptance Inspection cannot be arrived at without the consideration of the "Process Curve," which tells us the relative frequency with which batches of various fractions defective are presented for inspection.

If we wish to consider an elementary example of an acceptance scheme, we are faced with the question of what sort of process curve should we take. The curve must be simple in form, and it must be such that the problem of acceptance inspection can be reasonably posed, i.e. the batches must fall into at least two groups, "good" and "bad." The simplest such curve would be one with two ordinates, one at a level $p_1$ for fraction defective, representing the "good" batches, and another at a level $p_2 > p_1$, representing the "bad" batches. In any case some sort of "bimodal" or "multimodal" curve must be taken, because the problem presupposes that there really exist "good" batches as distinct from "bad" ones,† and the two-ordinate curve is the simplest possible curve of this sort. In practice, there would inevitably be small deviations from the levels $p_1$ and $p_2$; but it can be verified that such small deviations will not affect seriously the general conclusions we propose to draw. The kind of simplification we propose here is similar to that made in the elementary theory of design of bridges, in which we may represent a bridge by a uniform beam, simply supported at the ends; we know that no bridge will in practice be quite uniform, nor will it be simply supported, but to a first approximation the simplification is often valid.

As a numerical illustration let us then suppose that the product comes for inspection in batches each containing 100 items, and that 60 per cent. of these batches contain 1 per cent. defective while the remaining 40 per cent. of the batches contain 9 per cent. defective. If now we operate an inspection scheme with sample size $n = 5$ and acceptance number $c = 0$, the average fraction defective of the accepted product will be

$$\frac{\cdot 01 \times \cdot 6 \times (\cdot 99)^5 + \cdot 09 \times \cdot 4 \times (\cdot 91)^5}{\cdot 6 \times (\cdot 99)^5 + \cdot 4 \times (\cdot 91)^5} = \cdot 0343,$$

and we will be accepting 82 per cent. of the total incoming product. If we now double the batch size by "pairing batches," we have to consider first the effect of this on the process curve. Assuming that the fractions defective in the batches paired are statistically independent, the process curve now will have three ordinates, one at $p = 0{\cdot}01$, one at $p = 0{\cdot}05$, and one at $p = 0{\cdot}09$. The relative frequencies will be, respectively, 0·36, 0·48 and 0·16. And on operation of an inspection scheme with double sample size, $n = 10$ and $c = 0$, the average fraction defective of the product accepted will now be

$$\frac{\cdot 01 \times \cdot 36 \times (\cdot 99)^{10} + \cdot 05 \times \cdot 48 \times (\cdot 95)^{10} + \cdot 09 \times \cdot 16 \times (\cdot 91)^{10}}{\cdot 36 \times (\cdot 99)^{10} + \cdot 48 \times (\cdot 95)^{10} + \cdot 16 \times (\cdot 91)^{10}} = \cdot 03441,$$

which is slightly worse than formerly. Further, we shall now be accepting only 67·5 per cent. of the incoming product, i.e. about four-fifths of what we accept under the former scheme.

* In practice many other considerations will have to be taken into account—the effect on the flow of production of temporary reductions in the throughput of batches, the effect on the producer's costing system of rejections, and so forth. For purposes of elementary exposition, however, these can be regarded as secondary.

† One might be tempted to think that the simplest, and most "typical" process curve would be one which was approximately binomial in form. But such an assumption would encounter the difficulty that in such circumstances any fixed sample size acceptance plan would have no effect—the general quality of accepted batches would be the same as the general quality of rejected batches.

CC-0. In Public Domain. Gurukul Kangri Collection, Haridwar

Digitized by Arya Samaj Foundation Chennai and eGangotri



If we make the batch size $N = 400$, and the sample size $n = 20$, with $c = 0$, the average fraction defective of the product accepted turns out to be ·03444, while the proportion of the product accepted will be only 45·8 per cent.

Taking a general case, if the incoming product contained fraction defective $p_1$ and $p_2$ with relative frequencies $P_1$ and $P_2$, the average fraction defective of the accepted product on operation of an inspection scheme with sample size $n$ and acceptance number zero will be given by

$$\overline{Q}_1 = \frac{p_1 P_1 (1-p_1)^n + p_2 P_2 (1-p_2)^n}{P_1 (1-p_1)^n + P_2 (1-p_2)^n} \quad . \quad . \quad . \quad . \quad . \quad (1)$$

If the batch size be doubled the resulting fraction defective will be $p_1, \frac{p_1+p_2}{2}, p_2$ with relative frequencies $P_1^2, 2P_1 P_2, P_2^2$. On operation of an inspection scheme with sample size $2n$ and acceptance number zero the average fraction defective of the accepted product will be

$$\overline{Q}_2 = \frac{p_1 P_1^2 (1-p_1)^{2n} + (p_1+p_2) P_1 P_2 \left(1 - \frac{p_1+p_2}{2}\right)^{2n} + p_2 P_2^2 (1-p_2)^{2n}}{P_1^2 (1-p_1)^{2n} + 2P_1 P_2 \left(1 - \frac{p_1+p_2}{2}\right)^{2n} + P_2^2 (1-p_2)^{2n}} \quad . \quad (2)$$

Simple algebraical reduction will show readily that

$$\overline{Q}_2 > \overline{Q}_1 \quad . \quad . \quad . \quad . \quad . \quad . \quad . \quad (3)$$

$$\text{if } \left(\frac{1-p_2}{1-p_1}\right)^n < \frac{P_1}{P_2} \quad . \quad . \quad . \quad . \quad . \quad . \quad (4)$$

Now $\frac{1-p_2}{1-p_1}$ is less than 1 as $p_1 < p_2$. Also when amongst the incoming batches there are more batches of better quality than of poorer quality, as is the case in practice, $\frac{P_1}{P_2}$ will be greater than 1. Moreover as $n$ increases $\left(\frac{1-p_2}{1-p_1}\right)^n$ decreases so that inequality (4) will in general hold. Hence we conclude that with doubled batch size and the same per cent. sample the average quality of the product accepted after inspection is generally slightly worse than what it was originally.

The situation disclosed can be summarized simply in words as follows: We start with a "process curve" in which the "good" batches are well separated from the "bad" batches, and the task of sorting the good from the bad can be reasonably well done by a small sample. When we double the batch size, we mix good batches with bad ones, thereby producing some "mediocre" batches, which are difficult to sort. Enlarging the sample size improves the discriminating power of our scheme, but this improvement is offset by the increased difficulty of the sorting problem which the scheme has to solve. The net result is much the same as before we doubled the batch size, in the particular case we have taken. In general, for a given percentage inspection, increasing the size of the batch will have a good effect on the discriminating power of the inspection, but it will have a bad effect on the "process curve" of the batches to be discriminated. This latter effect has been ignored by many writers. Which of these two effects will dominate will depend on the particular circumstances. In any case it is quite wrong to suggest, as is so often done, that an increase in batch size automatically improves the effectiveness of a sampling inspection scheme.

*Acknowledgement*

The author is much indebted to G. A. Barnard who drew his attention to the problem and gave every encouragement and guidance.

*References*

[1] Grant, E. L. (1946), *Statistical Quality Control*, pp. 343 §250. (McGraw-Hill Book Co., Inc., New York.)
[2] Barnard, G. A. (1946), "Sequential Tests in Industrial Statistics," *J. R. Stat. Soc. Suppl.* VIII, 1, 19.

CC-0. In Public Domain. Gurukul Kangri Collection, Haridwar

Digitized by Arya Samaj Foundation Chennai and eGangotri



# PROCEEDINGS OF SECTIONS

## Industrial Applications Section

### Proceedings of the London Group

### Twenty-Second Ordinary Meeting, 8th October, 1948

Subject : "Quality Control Charts in Cost and Productivity Analysis."

Principal Speaker, Mr. G. Todd ; Chairman, Mr. D. Newman ; Attendance, 51.

Mr. Todd illustrated his method of studying cost and productivity indices with figures from the coal industry—the only reliable output data to be published in detail. He showed how, by the setting of limits based on the variability inherent in the weekly outputs per man-shift, the occurrence of changes in output could be established (or otherwise) after the introduction of the 5-day week, and how these changes varied with different areas. Frequency distributions of the weekly outputs for seasonal variations showed that the assumption of normality implicit in the use of the control limits was valid.

Nine people including Messrs. Brownlee, Challoner, Desmond, Jennett, Newman and Seddon took part in the discussion. Mr. Jennett quoted an example in which productivity figures derived from the production unit's material usage showed only one-twentieth of the variability exhibited by the cost office's figures based on monthly stocktaking. He warned against the use of costing figures as a measurement of a department's short term efficiency.

Mr. Desmond had used the same techniques in studying labour turnover for a group of factories, and found that turnover increased with the size of factory.

Mr. Newman said that changes in absenteeism in the coal industry demonstrated by control charts, had led to causes being determined which would otherwise have remained unknown. The vote of thanks was proposed by Mr. Hall.

### Twenty-Third Ordinary Meeting, 12th November, 1948

(Joint Meeting with the Study Section)

Subject : "Control Charts and Associated Techniques."

Principal Speaker, Mr. W. J. Jennett; Chairman, Mr. D. Newman; Attendance, 55.

The theme of Mr. Jennett's contribution was that charts could be understood by most people in industry, and should therefore be used extensively, both as a method of reporting the results of more advanced analyses (analysis of variance and regression) and as an alternative method. He demonstrated by means of the Galton apparatus the basic principles behind control charts, followed by a number of examples of particular applications illustrated by slides and drawings. These included:

(*a*) a standard control chart for the purpose of watching an engineering process; (*b*) the analysis of variance which determined where charts should be kept in a valve pumping problem; (*c*) the breaking down by means of a planned experiment of the process variability of a multihead machine from which it was possible normally only to take random samples; (*d*) control limits set about a regression with time; and (*e*) a chart method of the analysis of variance by plotting the range within batches, the range between the averages of batches, and the average of batches. A method of obtaining standard deviations of single estimates excluding drifts, by averaging the differences between successive pairs of readings, was used in this example, and a chart of the attendance at London Group Meetings since 1945 was similarly treated.

Seven people, including Messrs. Blackwell, Davies, Dudding, Gait and Woodget, took part in the discussion. A vote of thanks was proposed by Mr. Buckland, the chairman of the Study Section.

### Twenty-Fourth Ordinary Meeting, 10th December, 1948

Subject: "A Statistical Department in the Steel Industry."

Principal Speaker, Mr. A. Swan; Chairman, Mr. D. Newman; Attendance, 52.

Mr. Swan outlined the structure of a small advisory statistical department centred in a research organization serving a number of semi-independent factories. He listed the characteristics desirable for statisticians, computers and clerical assistants, stressing the necessity for translating the statistical work into terms suitable for discussion at all levels in the factory.

CC-0. In Public Domain. Gurukul Kangri Collection, Haridwar

Digitized by Arya Samaj Foundation Chennai and eGangotri



Messrs. Buckland, Brownlee, Davies, Jennett, Lyle, Read and Wishart took part in the discussion, much of which revolved round the qualities necessary for a successful works' statistician. It was agreed that he should be sufficient of a mathematician to keep in touch with current literature, but that almost any technically trained man with the right outlook would be suitable. It was thought that, at present, men of somewhat different bias would be needed for industrial and economic statistics respectively. The statistician should keep in close touch with other specialists in the research organization, and act as a clearing house for those problems which he was in a unique position to observe. Dr. Gooding proposed the vote of thanks.

J. K.

---

CC-0. In Public Domain. Gurukul Kangri Collection, Haridwar

Digitized by Arya Samaj Foundation Chennai and eGangotri



# REVIEWS OF STATISTICAL AND ECONOMIC BOOKS

## CONTENTS

PAGE

1.—*Huber* (*Michel*). Cours de Statistique appliquée aux affaires: V. Statistiques d'Entreprises... ... ... .. .. .. .. .. .. .. .. .. 240

2.—*Mentha* (*Gérald*) Les causes de décès en Suisse, étudiées a la lumière de la démographie actuelle et de la démographie potentielle .. .. .. .. .. 240

3.—*Simmonds* (*R. C.*). The Institute of Actuaries, 1848–1948 ... ... ... ... 241

4.—*Wallace* (*William*), Enterprise First... ... ... ... .. .. .. .. 243

5.—*Gopal* (*M. H.*). The Theory of Excess Profits Taxation ... ... ... ... ... 243

6.—*Mulky* (*M. A.*). The New Capital Issue Market in India ... ... ... ... 244

7.—*Leake* (*P. D.*). Commercial Goodwill: Its History, Value and Treatment in Accounts

8.—*Leake* (*P. D.*). Depreciation and Wasting Assets and their Treatment in computing Annual Profit and Loss .. .. .. .. .. .. .. .. .. 245

1.—*Cours de Statistique appliquée aux affaires: V. Statistiques d'Enterprises. Institut de Statistique de l'Université de Paris.* (*Actualités Scientifiques et Industrielles*, 1036.) By Michel Huber. Paris: Hermann et Cie, Editeurs, 1948. 285 pp. 10″.

This volume forms the fifth and concluding volume of the late M. Huber's *Statistique appliquée aux affaires*, completed shortly before his death in 1947. Its equivalent title in English, "Establishment Statistics", gives little idea of its scope. Aggregate statistics of production, consumption, pay-rolls, employment, etc., which are compiled from "statistics of establishments," are excluded from this volume as they have been, to a large extent, covered by the previous volumes in the series. This volume is confined primarily to the statistics of *an* establishment, and covers the application of statistics "au contrôle de la gestion," in other words, the statistics necessary for adequately controlling the running of an enterprise. After describing the different rôles of accountancy and of statistics in a business enterprise, the author expounds in detail the application of statistics to the different functions of business undertakings:—the commercial function (purchases, sales, stocks); the productive function (equipment, labour, cost of production); the financial function (capital, issues, investments); the accountancy function (balance-sheets, inventories); the administrative function (staff and organization), and budgetary control (comparison of "plans" and results). A final chapter deals with the standardization of balance-sheets, and cost accountancy. An appendix briefly describes the problem of sampling, the method of estimating the characteristics of the whole from a sample, and the use of the various tests ($\chi^2$, t. Z) of Pearson, Student, and Fisher.

The application of statistics to the "control" of the management of a business enterprise does not appear to have formed the subject of many books on statistics in the United Kingdom, if the lengthy bibliography at the end of this book is to be taken as a guide. The subject is, however, worthy of attention, especially in these days of planning, controls, "targets," etc., and this volume is an original and valuable contribution to the subject. J. W. N.

2.—*Les causes de décès en Suisse, étudiées a la lumière de la démographie actuelle et de la démographie potentielle.* By Gérald Mentha. Genève: Georg et Cie, S.A., 1948. 240 pp. $9\frac{1}{4}'' \times 6\frac{1}{4}''$.

Mortality statistics can be studied by many different techniques, but the data are always obtained in the same general form, that of a series of death-rates by age, sex, cause of death and so on. The most effective way of comparing the mortality due to any set of causes or the totality of causes will probably always be a matter of opinion. Even the rates at given ages at a given time depend not only on the conditions of the population at that time, but also on the past conditions of hygiene; so that it would appear that we shall never be able to discuss the mortality of different times or peoples by any simple and rigid system of indices or rates. It seems that the actual observed rates in groups of the same age, sex, occupation, etc., are themselves the best means of comparison, but they are regarded by many as too cumbersome, and so weighted means have been devised as a sort of summary.

The author has rejected the use of the standardized rates because of the fictitious nature of the standard populations, and because the standard populations cannot be independent of the previous mortality experience. He states that the only satisfactory weighting can be the life

CC-0. In Public Domain. Gurukul Kangri Collection, Haridwar

Digitized by Arya Samaj Foundation Chennai and eGangotri



table population and the related notion of the potential life. In Chapter II he sets out the computational procedures and justifies certain short cuts. Chapter III will be of some interest to foreign students, as it gives a summary of the practice of registration and the compilation of mortality statistics in Switzerland from 1876 to the present day. The rest of the book discusses the results of computations for total mortality and for deaths by specified causes. Chapter IV gives the tables of potential life lost due to different causes at different ages and for various epochs in Switzerland. In Chapter V the author gives tables of the mean and median of the age at death and the "centre mortuaire" and then discusses the toll taken by various diseases.

It is difficult to understand the reference, on page 19, to Lotka, "whose works cannot be applied to our problem." The transatlantic enthusiasm for the arithmetic of the mortality rates was the subject for comment as early as 1922, and, in fact, the Metropolitan Life Insurance Company has calculated the "money value of a man," i.e. the potential life expressed in monetary terms. The author, on the other hand, traces all his inspiration back to L. Hersch and his writings, chiefly since 1940. We cannot believe that the "centre mortuaire" can ever play a serious part in the discussion of the mortality statistics, or that the use of the concept of the potential life really simplifies the problem. We surely cannot regard the death of an infant with congenital abnormalities as the loss of 70 years of potential life; nor that of an old man dying of senility as the loss of any potential life. From the viewpoint of the community it is doubtful, too, if the loss of a child can be given more weight than that of a person in early adult life. There appears to be a grave logical difficulty in the assumption, underlying the method, that every person is capable of living at least to the length of time measured by his expectation of life, for this involves the possibility of a life table with still greater expectation of life and so on. Further to compare two populations we should have to standardize them on the same life table, and still cannot avoid the arbitrary choice which the author deplores in his introduction. We may conclude that the potential life technique can never be more than a picturesque way of showing the load borne by any community, and little advantage is derived from discussing mortality statistics in this form. If we consider the life table populations in the more civilized and hygienic communities we see that they will shortly have an approximately rectangular form up to the age of sixty-five years, and so all life table populations will tend to approach that of the equivalent average death rates together with a group of survivors sixty-five years and over. H. O. L.

3.—*The Institute of Actuaries* 1848–1948. By R. C. Simmonds. London: Institute of Actuaries, 1948. xii + 318 pp. 8½″.

As part of its centenary celebrations the Council of the Institute of Actuaries ordered that an account of the Institute during its first 100 years should be published. Mr. Simmonds, to whom fell this responsible task, has combined a thoroughness in research, a dignity of treatment, and his own characteristic vein of humour, to produce a volume not only worthy of the occasion but extremely pleasant to read.

The author explains that the book is intended to be a record of the Institute and that he "could not roam into kindred subjects such as the history of actuarial science or the history of life assurance," but as the growth of the Institute is traced through the years the reader catches revealing glimpses of the changing environment in which the Institute has developed; one sees beyond a growing Institute to a growing science and an increasing social usefulness of actuarial methods.

The history falls into natural epochs—formation, establishment, development up to 1884, when the Royal Charter was granted, further development up to World War I, and the subsequent history to 1948. The author has yielded to the "specially compelling interest of the earlier times" and has devoted disproportionate space to a frank account of the interplay of factions and personalities as a result of which "the Institute had had not only an ante-natal but also an anti-natal history." The main division was between a small, compact and powerful group desiring only an association of managers of life assurance offices and the remainder, larger, looser and individually less weighty, wishing to establish a professional body of actuaries as such. The larger body proceeded with its intentions, committee succeeding committee in the early part of 1848, and the form of the proposed association remaining the subject of controversy until in July the Institute was formed with the following objects:

> "The development and improvement of the mathematical theory upon which the practice of life assurance is based, and the collection and arrangement of data connected with the subjects of duration of life, health and finance. The improvement and diffusion of knowledge and the establishment of correct principles relating to subjects involving monetary considerations and the doctrine of probability. The nearer approximation to uniformity of practice, official and professional . . . the free interchange of opinion and counsel in matters of difficulty whether theoretical, official or professional."

CC-0. In Public Domain. Gurukul Kangri Collection, Haridwar

Digitized by Arya Samaj Foundation Chennai and eGangotri



The original resolution speaks of preserving the quality of membership by the grant of certificates of competency after examination in "mathematic theory, vital statistics, computation and construction of tables and bookkeeping and office routine." Meanwhile, the minority cut themselves off from the Institute by forming the Actuaries' Club. Thus was the profession in London riven in twain until 1884 by a state of continuing and embittered aloofness.

The period of establishment takes us from 1848 to 1855. It began with a determined attempt, which met with little success, to bring in the surprisingly numerous actuaries who had not been enrolled, and ended with the secession of a large body of Scottish members to form the Faculty of Actuaries in Scotland. The cleavage occurred on matters of principle, dissatisfaction with the failure to overcome the geographical difficulties of serving Scotland from a London office, and with what was considered to be a weak attitude taken toward the professional conduct of some members of the Institute.

"The period 1856 to 1884 was one of solid work and steady progress that led to the twin achievements of incorporation under Royal Charter and of union of the broken body of English Actuaries." In 1862 steps were taken to replace the government of the Institute on a more formal basis and to terminate the special arrangements (government by a limited Council) adopted after the Scottish secession, but the door was left open rather more widely for election of Fellows without examination. Such admissions as time passed were to cause "increasing and natural dissatisfaction which was presently expressed in plain speaking." From the time of the grant of the Royal Charter admission without examination has been a rare honour.

In 1874 the Institute moved, with the Statistical Society, from St. James's Square to the Principal's House in King's College. In describing the endeavours to secure improved accommodation Mr. Simmonds has drawn freely from the account given in the Annals of the Royal Statistical Society of the way in which all the learned societies were at this time seeking more adequate premises. In 1884 both the Statistical Society and the Institute moved to Adelphi Terrace. It was from Adelphi Terrace that the Institute finally moved to Staple Inn in 1884. The gradual enrichment of these offices and the growing tradition associated with them makes pleasant reading until one comes to the tragic record of their destruction by a flying bomb in 1944.

It is clear that in the period immediately preceding 1884 the Institute was gradually gaining in respect, both with regard to the high standard of professional accomplishment and to the accumulative effect of its educational system. It is difficult to summarize in a sentence or two the events of these years. Mr. Simmonds himself is limited to a collection of brief and sometimes very indirect references in old documents. It is indeed remarkable that the author has been able to knit these references together in such a way as to give the impression of a continuous narrative.

And so in 1884 we come to the Royal Charter, vigorously but unsuccessfully resisted by the Actuaries' Club—a last stand before reconciliation. T. B. Sprague is quoted as stating that "by the grant of a charter a fundamental change has been made in the character and constitution of the Institute. It is no longer a private scientific society composed of gentlemen associated together for the purpose of promoting the study of the theory of life insurance; but it is now a professional body publicly recognized as representing and entitled to speak in the name of the Actuaries of the United Kingdom." By the end of the century the Institute had achieved such a degree of influence that it had become the custom of the Government to seek its opinion on actuarial matters. In more recent times, too, there has been an increasing recognition that the rigorous training of the actuary, inculcating as it does the high degree of analytical ability and a broad outlook, fits the actuary especially for responsibility in organization beyond the life assurance sphere, and so the scope of the profession has considerably widened.

Mr. Simmonds devotes much space to an account of the development of the examination system. The gradual changes that have been made in the syllabus for the examinations and the growth in the additional equipment of the Institute, are evidence of the increasing usefulness of actuaries and of the need for preserving a high professional standard. In view of the contemporary extension of statistical activity the change in syllabus which was agreed in 1946 and is just taking place is of special interest. The crux of this change lies in a more systematic treatment in all parts of the examinations of the subject of statistics, the introduction of a more formal economic background to the study of finance, and increased attention to demography. Each stage of the examinations is now divided into three main groups: mathematical, statistical and financial, and there is a progressive approach to the more complicated aspects of the subject. The candidate who has passed the first three parts of the examination will now be granted his Associateship and will at that stage be eminently suitable for employment in responsible statistical finance and administrative work.

Mr. Simmonds's diligent search has revealed many interesting references; to the use of the arithmometer in 1870; to improvements to notation in 1872; to distinguished honorary members,

CC-0. In Public Domain. Gurukul Kangri Collection, Haridwar

Digitized by Arya Samaj Foundation Chennai and eGangotri



among them, Dr. William Farr; to contributions towards the Galton Laboratory and Pearson's Tables for Statisticians; to the admission of women for the first time in 1918; and even to contributions to humorous verse.

Mr. Simmonds writes as "an Institute man" with a loyalty and an affection for the profession which is unmistakable. As a factual record the book is an invaluable historical contribution. As a confession of faith it is both sustaining and challenging. B. B.

4.—*Enterprise First.* By William Wallace, M.Com.(Lond.). London: Longmans, 1946. 112 pp. $8\frac{1}{2}'' \times 5\frac{1}{2}''$. 8*s.* 6*d.*

Mr. William Wallace occupied some of his leisure moments while he was a Director at the Ministry of Food, in recording his views on the relations of the State to Industry. Where the author draws on his personal experience of the wartime relation of the State to the chocolate and confectionery trade, his book constitutes a useful and interesting case-study. Unfortunately, such glimpses of reality are all too brief, and, for the most part, *Enterprise First* sets out to indicate a somewhat indecisive middle way between nationalization and *laissez-faire*. Having accepted nationalization in those cases "where the particular circumstances seem to point to this as best solution," we are invited to grapple with the problems of attaining the "highest interests of the community as a whole" in a situation where "the spirit of adventure in private enterprise" is as likely to be applied to perfecting restrictive practices as to ensuring efficient production. The author has a good deal to say about the administrative structure necessary to make the best of the two worlds of State guidance and private initiative. The State should establish a Ministry of Industry and recruit a staff of industrial civil servants. Thus equipped, it would lay down principles, oversee industry, formulate and enforce minimum conditions and license restrictions of competition. Some of these numerous objectives have been attained since the book was completed in 1945; it would be interesting to know what Mr. Wallace, in the role of business man rather than temporary civil servant, would now think of the results and of the effort required to attain them.

The author succeeded in picking out many of the problems which were to vex economists and administrators in the immediate post-war years. Some of the machinery he proposed has been established and many of the criteria he sets out are now accepted. We have learnt, however, that administrative machinery and high aims are not enough. We are to-day little nearer knowing what prices our price-fixers should fix or precisely what practices our Monopoly Commission should outlaw, and on such vital details Mr. Wallace does not provide very firm guidance.

P. A. D.

5.—*The Theory of Excess Profits Taxation.* By M. H. Gopal. Mysore: Bureau of Economic Research, 1947. xiv + 391 pp. Rs. 12.

At a time when the heavy post-war taxation of industry is much in men's minds this treatise is of considerable interest. The book is divided into two parts, the first part dealing with theory and the latter part with a description of the excess profits tax in India. It was intended to include two further chapters in the first part—the concept of profits and the problems of administration—and three in the second part dealing with the operation of the tax in the United Kingdom, the United States and other countries, but difficulties of publication prevented this. They are, however, to be published subsequently. As the author states in the preface, the book is offered as "one type of solution bridging the gulf between the decaying nineteenth century capitalism and the spreading twentieth socialism, with the case of India always kept in view." Owing to numerous quotations, mainly from Stamp, T. S. Adams and Seligman, and frequent printing errors, the book is not always easy to read. It is far from worthy of the great theme with which it deals.

The author recommends a progressive excess profits tax in peacetime. Dr. Gopal should have been on guard when he studied the reasons for the abolition of the tax, not only in his own country, India, but in the United States and in the United Kingdom. The Federal Reserve Act of 1945 repealed the excess profits tax in the United States from January 1st, 1946, for four reasons: (1) the tax was a major obstacle to reconversion and to the expansion of business; (2) a major purpose of the tax was to prevent war profiteering and with the end of the war the continuance of the tax could never be justified on this basis; (3) the longer the excess profits continued, the less the base period was a measure of excessive profits; and (4) the tax falls more lightly on old-established business because many of these companies have invested capital which, although used in the determination of excess profits, long ago ceased to contribute to profits. These reasons similarly apply to the discontinuance of the tax in the United Kingdom. When proposing the abolition of the tax the Chancellor of the Exchequer emphasized that, although a very suitable war-time tax, it worked against incentive and efficiency in peacetime. These arguments, even

CC-0. In Public Domain. Gurukul Kangri Collection, Haridwar

Digitized by Arya Samaj Foundation Chennai and eGangotri



with all the limitations proposed by the author for a peacetime excess profits tax, are unchallengeable.

It is doubtful whether the distinction between an excess profits tax and a tax on profits, and the effects of each tax are appreciated. The excess profits tax applies to the excess over certain standards of profit and much of the excess is the result of the very exceptional conditions of war. In the United Kingdom from April 1st, 1939, to March 31st, 1940, the tax was 60 per cent.; from April 1st, 1940, to December 31st, 1945, 100 per cent., including a postwar refund of 20 per cent., and from January 1st to its abolition on December 31st, 1946, it was 60 per cent. The profits tax differs from this heavy windfall taxation in that it applies to the entire profit and is paid in the United Kingdom along with income tax. No tax is payable where the profits do not exceed £2,000, and an abatement is allowable equal to one-fifth of the amount of profits between £2,000 and £12,000 by which the profits fall short of £12,000. A tax of 25 per cent. on distributed profits and 10 per cent. on undistributed profits is a heavy burden when added to the income tax where companies are liable at the standard rate. The proceeds of the tax, of course, are deducted from the liability under income tax. The tax even on undistributed profits when added to income tax amounts to no less than 50·5 per cent. of the profits. The effect on the ploughing back of profits is obvious. To do away with the profits tax entirely would mean, perhaps, the sacrifice of too large a sum, which may be of the order of £125,000,000. Before the war the greater part of savings was done by companies. In wartime the situation was very different. On the one hand, the excess profits tax prevented companies from increasing their savings to any extent, while on the other hand, the growth of money incomes combined with rationing and the impossibility of obtaining many goods, made for a great increase in private savings. In 1938, for example, out of £326 million of savings, £170 million was by companies and institutions and £140 million by individuals. £16 million was the amount set aside for increased tax liabilities. In 1943 company savings were only £210 million as against personal savings of £1,400 million. Taxation to-day is so heavy on industry that the *net* capital formation in industry is probably a negative amount. Mr. S. P. Chambers, formerly a member of the Board of Inland Revenue, and now finance director of Imperial Chemical Industries Ltd., has come to the same conclusion after an examination of the official data in the White Paper on the National Income and Expenditure in the United Kingdom in 1947 and other data. "Now we know," adds Mr. Chambers, "that there has been considerable capital expenditure in one or two branches of industry, so that we are forced to the conclusion that, outside the one or two specially favoured branches, the amount spent on capital formation in industry is almost certainly less than what is necessary to replace worn out equipment at to-day's prices." That means that the physical volume of capital, as distinct from its value expressed in inflated money prices, is probably diminished. The accounts of many, if not most, industrial concerns, also give a false picture because they, too, make their provision upon what the assets cost originally, and not what it will cost to replace them. The Federation of British Industries in pre-Budget memoranda to the Chancellor of the Exchequer has also stressed the effects of the shortage of industrial capital and the levying of taxes on 'unreal' profits arising from inadequate depreciation allowances and from appreciation of inventories.

Enough has been said to show that the author has not made out a case for excess profits taxation in peacetime. He has not examined with analytical thoroughness the effect of the heavy taxation of industry on the internal economy of business firms. Taxable profits must not be confused with true profits measured in real terms. Taxable profits may be arrived at on inadequate depreciation allowances (say on initial costs) when compared with replacement costs as well as by unduly high rates of tax. The steady rise in the money value of inventories also adds to the difficulties of finance. In these circumstances firms may be unable to finance any longer out of their own resources their fixed assets and stocks. In other words, the dangers of excessive taxation of profits and not merely excess profits may be very real. The tax gatherer cannot overlook this aspect of taxing profits without in the long run killing the goose that lays the golden eggs.

G. F. S.

6.—*The New Capital Issue Market in India.* By M. A. Mulky. Bombay: The Popular Book Depot, 1947. 99 pp. Rs. 5.

This is a short but very readable essay by an economist who has made a special study of the capital issue market in India. It is based on the examination of nearly 600 balance sheets of companies, together with prospectuses of new company flotations. Mr. Mulky has had the advantage of seeing the events which he describes both from an official and from a non-official angle. When the book was written he was Under-Secretary to the Government of India in the Commerce Department. He was previously in the Investment Corporation of India under the management of the great firm of Tata.

CC-0. In Public Domain. Gurukul Kangri Collection, Haridwar

Digitized by Arya Samaj Foundation Chennai and eGangotri


The merit of the book is the large amount of statistical facts which have been presented in such a way that he who runs may read and reading understand. He describes the various institutions of the new capital issue market, methods of flotation, types of security, the price of new industrial capital and the control of capital issues. He covers in the space of half-a-dozen chapters ground which is of much interest to the British industrialist and the British investor.' India is very short of capital. Unfortunately, data of capital formation and the amount of capital investment in the national income are sadly wanting and we have only the most hazy estimates of net and gross capital formation in India to-day. Mr. Mulky is a convinced believer in the planning of investment, "for, it is only by the proper regulation of investment that the industrial development of this country can be assured on sound lines." The contribution of the managing agency system to the industrial development of India is recognized to a degree unusual by an Indian writer. The present industrial development of the country has been, in his view, in no small measure due to the initiative and enterprise of the managing agents who have been responsible for the work of promotion and pioneering of industrial concerns. What the German banking system did for Germany, the managing agents have done for India. He is a little critical of the Indian managing agency firms, especially in Bombay, in contrast to the British managing agency firms in Calcutta which have been less conservative and less imitative, with the notable, very notable, exception of Tata Sons Ltd. The house of Tata has, as everyone knows, been the promoters of the Tata Iron and Steel Co., the Tata Hydro-Electric Power Supply Co., the Andhra Valley Power Supply Co., and large firms connected with civil aviation, chemicals, radio, machine tools, etc. Their methods have been examined and the importance of the Government of India in assisting by advice and tariffs the Tata Iron and Steel Co. has not been overlooked as, for example, on page 46, where he quotes from a letter in 1926 to the firm that in the opinion of the Government "the arrangement of capital whereby 74 per cent. of the share capital consists of cumulative preference shares whereby more than 90 per cent. of these cumulative preference shares bear the high rates of 7½ per cent. cannot be regarded as satisfactory." Since then many changes for strengthening the finances of these and other firms have taken place. The objectives and working of the capital issues control order have been clearly stated. The author's conclusion is that the new issue market in India cannot compare with the organized new issue markets in England and the United States with their well-developed institutions, such as issue and investment houses, investment banks, trusts, etc., specializing in the work of promoting new companies and the underwriting and marketing of their securities. He notes, however, the progress in recent years and hopes to see a considerable development of the new issue market which he believes to be the pivot of investment of any country.

This volume is of special interest at the present time when concern in India is widespread over the inactivity of Indian investment markets. Civil disorders have naturally given rise to insecurity and lack of confidence on the part of investors. Credit is a delicate piece of furniture which cannot be dusted with a Turk's head mop. This phase is over, or nearly so, and this factor hindering investment should cease to operate. There are, however, other factors which foreign investors cannot fail to consider such as the increased cost of production and the high level of taxation. Recently the Government of India's Finance Minister has stated that "Our present prices, as compared with pre-war prices, are not by any means so high or much higher than the level at which they are likely to settle when normal conditions have been established." A downward readjustment, in his view, may not be far off. On the thorny problem of nationalization he showed that Government policy contemplated a combination of private and public enterprise and so far as could be envisaged there would be a large field for private enterprise. British enterprise would continue to develop in India, giving Indians opportunities for employment and training. For some time to come India herself could not obtain without outside help all the capital goods and all the experience and technical skill required for her development.

Mr. Mulky's book is worth buying and keeping. It is to be hoped that we shall not have long to wait for a treatise by the same author on the Indian capital market similar to those of Lavington and others on the capital market in this country. G. F. S.

7.—*Commercial Goodwill: Its History, Value and Treatment in Accounts.* By P. D. Leake. London: Gee and Company, 1948. 4th ed. xiii + 201 pp. 8¾″ × 5¾″. Price 17*s.* 6*d.*

8.—*Depreciation and Wasting Assets and their Treatment in Computing Annual Profit and Loss.* By P. D. Leake. London: Gee & Company. 5th ed. 1948. xxviii + 250 pp. 8¾″ × 5¾″. Price 20*s.*

It is convenient to consider these two books together since both deal with the subject of wasting assets. The term "wasting assets" is usually applied to mineral deposits, growing timber and other raw materials in their natural state which become exhausted or consumed through being



CC-0. In Public Domain. Gurukul Kangri Collection, Haridwar

Digitized by Arya Samaj Foundation Chennai and eGangotri


worked. It can also be applied to all fixed assets which are gradually destroyed in the carrying on of an undertaking. Mr. Leake uses the term in the latter sense which, being much broader than the former, excludes few fixed assets apart from the site value of land, and certain investments such as stock exchange securities. In particular it includes commercial goodwill, which covers trade marks, patents and designs, copyrights and goodwill generally.

The author's views on the treatment of wasting assets are clearly stated. Wasting assets are not acquired for the purpose of re-sale, but are deliberately dedicated to be destroyed in the carrying on of an undertaking. For accounting records, therefore, the subsequent market values of any wasting assets held by an undertaking have no significance, and only their costs are relevant. Moreover these costs are in the nature of payments in advance on revenue account which should ultimately be recovered, and this leads to the subject of depreciation. Depreciation is defined as expired capital outlay, that is, it represents that portion of the original costs of wasting assets, from which no further benefit can be expected. Thus depreciation is also unaffected by the course of the market prices of any wasting assets held by an undertaking, its object being to refund the original costs of the assets at the end of their useful lives. It is held that depreciation should be calculated by the "straight line" method, since equal annual depreciation allowances on any asset will, as a general rule, match closely the annual benefit from holding it.

Commercial goodwill is defined as the right which grows out of all kinds of past effort in seeking profit, increase of value or other advantage. Its worth is the discounted value of all expected future profits above the normal level. It has an essentially temporary character owing to competition, changing conditions, and an inherent tendency to waste with the lapse of time unless maintained by constant effort. For accounting purposes it should be treated as a cost rather than an asset, since capital should be represented by tangible assets and not by anticipated future profits. Accordingly it should only appear in the books of a firm while some cost actually incurred under this heading is being written off. To retain goodwill in the accounts otherwise is improperly to forestall the future. Nevertheless it may be misleading to ignore goodwill altogether. Some firms with an obviously valuable goodwill draw attention to the fact by showing it in their accounts and balance-sheets at small token values. The author suggests that it might be recorded in balance-sheets as a contingent asset, that is, one which would become tangible under certain circumstances, such as the sale of the business. This is in line with the treatment of certain liabilities which, only arising in a contingency, have no place in the accounts themselves until they do arise.

Thus from these ideas the two golden rules of accountancy emerge. Firstly, a wasting asset should always be valued at cost less depreciation, the depreciation being calculated so as to extinguish the cost (apart from residual scrap value) at the end of the asset's useful life. Secondly, no credit should be taken for any profit until that profit is actually earned. Both of these rules were undoubtedly appropriate to the terminating business ventures of earlier days, in which they probably originated, but in these days when business transactions are carried on by firms as a continuous process, and when the value of money is subject to considerable fluctuations, they certainly warrant a re-examination.

Much discussion has been taking place on the problem of maintaining business capital intact. The discussion has been prompted by the high level of current taxation, but it is the problem due to changing price levels rather than the one due to changing tax levels with which we are concerned here. The question is whether depreciation and taxation allowances should be computed on the old system so as to maintain the financial capital of an undertaking or on a new system designed to maintain its real capital. Since the war rising prices have made it very difficult to replace real capital without issuing new shares or borrowing additional funds, but the difficulties have been exaggerated. For one thing, established undertakings do not have to replace all their industrial assets at the present enhanced prices, which gives them some advantage over new entrants into industry. Furthermore many expired assets are not replaced with identical assets owing to technological changes, so that when the old asset is replaced by the new, the undertaking gets an advantage over others which are held back by the limitations of the old equipment they are operating. Such advantages clearly justify the raising of some additional funds should this be necessary. It should also be emphasized that prices are not always rising, so that increased depreciation and taxation allowances in times of rising prices would logically have to be offset by lower depreciation and taxation allowances in times of falling prices. It is obvious that a proper system of capital reserves could be used to equalize the impact on revenue account of price changes in the market in which assets are renewed. From the practical point of view, a system of accounting departing in any way from the traditional cost basis would certainly raise some difficult problems.

While the author does not enter very deeply into this discussion in these two books, the points he does make together with those given above incline one to think that for accounting purposes,

CC-0. In Public Domain. Gurukul Kangri Collection, Haridwar

Digitized by Arya Samaj Foundation Chennai and eGangotri



at any rate, the orthodox principles he propounds stand up quite well to criticism. No matter how many shortcomings one may discover in them, it is exceedingly difficult to find a workable alternative system free from still more serious objections. The rules of conservative finance advocated are quite simple to operate, and give a margin of safety which tends to ensure the survival of the undertaking and to protect the rights of owner, partner, shareholder and creditor alike. The author seems to be chiefly concerned with these features, and his object in giving a clear restatement of the accounting principles involved is to encourage their more widespread adoption and more uniform practice in the business world.

There is one point which is of some interest outside the field of accountancy. Mr. Leake advocates the introduction of a compulsory register of plant, which would show annually for each class of wasting asset the amount of cost incurred and the amount of depreciation charged. Under the new Companies' Act, it seems that some kind of record of these items will have to be kept, and if it were kept universally in the form suggested by Mr. Leake, a statistician, armed with suitable price indices, might make some headway in the problem of assessing the comparative amounts of capital involved in various industries, and an entirely new approach might be given to productivity studies. The universal adoption of such a register would certainly open up a rich field for statistical research.

T. M. R.

CC-0. In Public Domain. Gurukul Kangri Collection, Haridwar

Digitized by Arya Samaj Foundation Chennai and eGangotri



## STATISTICAL NOTES

### BRITISH OFFICIAL STATISTICS

In the following table the summary figures of movements in the oversea trade of the United Kingdom are given for the third and fourth quarters of 1948, with comparable figures for earlier periods:

£ *million*

| | 1938 | 1947 | 1948 *First half* | 1948 *Third Quarter* | 1948 *Fourth Quarter* |
|---|---|---|---|---|---|
| | *Quarterly Averages* | | | | |
| *Retained Imports*, c.i.f. | | | | | |
| Food, drink and tobacco | 104·5 | 199·5 | 210·9 | 218·4 | 237·7 |
| Raw materials and articles mainly unmanufactured | 54·5 | 129·4 | 160·9 | 157·8 | 159·9 |
| Articles wholly or mainly manufactured | 53·8 | 97·7 | 118·8 | 127·6 | 109·1 |
| Other articles | 1·7 | 5·5 | 6·7 | 5·0 | 5·0 |
| Total | 214·5 | 432·1 | 497·3 | 508·8 | 511·7 |
| *United Kingdom Exports*, f.o.b. | | | | | |
| Food, drink and tobacco | 9·0 | 16·2 | 23·8 | 21·6 | 24·9 |
| Raw materials and articles mainly unmanufactured | 14·2 | 8·6 | 14·7 | 18·4 | 19·7 |
| Articles wholly or mainly manufactured: | | | | | |
| Metal goods | 43·9 | 137·5 | 179·9 | 194·4 | 208·1 |
| Textiles | 25·3 | 56·2 | 73·4 | 87·4 | 90·8 |
| Other manufactures | 22·1 | 56·0 | 69·2 | 75·2 | 77·0 |
| Other articles | 3·2 | 9·8 | 10·8 | 9·6 | 12·7 |
| Total | 117·7 | 284·3 | 371·8 | 406·6 | 433·2 |
| *Exports of Imported Merchandise*, f.o.b. | 15·4 | 14·8 | 15·7 | 15·8 | 17·4 |

The expansion in United Kingdom exports continued in the second half of the year, and for 1948 as a whole exports totalled £1,583·3 million—£445 million above the 1947 figure. Retained imports showed only a small increase compared with the first half year, and the year's total (£2,015·0 million) exceeded that for 1947 by £280 million. The excess of imports (at *c.i.f.* valuation) over total exports thus fell from £596 million in 1947 to £432 million in 1948.

Total imports in the year, valued at £2,079·5 million, were one-sixth higher than in 1947, but with a further increase in average values (to 189 per cent. above 1938) the volume was no more than 78 per cent. of that in 1938 (compared with 76 per cent. in 1947). Re-exports amounted to £64·5 million for the year, and are estimated at 42 per cent. of the 1938 volume.

Among the three main classes of retained imports, raw materials showed the biggest increase (£116 million) compared with 1947; in volume terms they rose from 83 to 88 per cent. of the 1938 level. Most of the individual groups shared in the volume increase, the only important exceptions being timber (which fell to only two-thirds of the 1938 volume) and hides and skins.

For food, drink and tobacco the increase of £82 million over 1947 led to no increase in volume, the index for both years being 74. The most important group changes were the increases for grain and flour (to 83 per cent. of the 1938 volume) and for feeding stuffs (50 per cent. of 1938), and the reductions for meat (to 64 per cent. of 1938) and dairy produce (60 per cent.).

The value of retained imports of manufactures (which now consist almost entirely of supplies and equipment for industry) was £83·9 million higher than in 1947 and the volume index rose

CC-0. In Public Domain. Gurukul Kangri Collection, Haridwar

Digitized by Arya Samaj Foundation Chennai and eGangotri



from 72 to 80. The two largest groups—manufactured oils (mainly petroleum) and non-ferrous metals—were 18 per cent. and 11 per cent. above the 1938 volume; machinery imports showed a substantial increase to £43·9 million (estimated at 86 per cent. of the 1938 volume).

While for imports the volume index was practically stable throughout 1948, for exports the quarterly index numbers (1938 = 100) were 126, 134, 138 and 147; for the year as a whole the volume was nearly a quarter higher than in 1947.

Exports of food, drink and tobacco (£94·0 million) increased to 4 per cent. above the 1938 volume. The increase in coal exports (to 10·5 million tons, valued at £38·9 million) accounted for the whole of the increase in raw materials which, in total, reached 38 per cent. of the 1938 volume.

For manufactured goods the volume increased to 155 per cent. of 1938, compared with 124 per cent. in 1947; the increase over 1947 was shared by each of the three main divisions of manufactured goods. The volume of metal goods exported was double that in 1938; exports of machinery (£254 million) and of vehicles (£244 million), which together formed nearly a third of the total value of exports, were at 193 per cent. and 266 per cent. respectively of the 1938 volumes, but for iron and steel (£106 million) the pre-war volume was exceeded by less than one-fifth.

For textiles exports the pre-war volume was reached in the third quarter and maintained in the fourth. The most striking feature was the recovery in cotton yarns and manufactures, which in the last quarter reached 70 per cent. of the pre-war volume compared with only 46 per cent. at the end of 1947. For wool the volume for the year was 26 per cent. above 1938, and for silk and rayon the pre-war figure was more than doubled.

Exports of other manufactured goods increased to 135 per cent. of the volume in 1938, the biggest increase over 1947 being for pottery, glassware, etc.—more than double the 1938 level. Chemicals exports increased by about a tenth to 156 per cent. of the 1938 volume.

---

The interim index of retail prices compiled by the Ministry of Labour and National Service which, except in June, had remained unchanged at 108 since April, rose to 109 in November. The rise, however, was in fact only fractional, but it was sufficient to raise the index quoted to the nearest whole number. The clothing figure continued to show a slight upward tendency between October and January, while the higher winter charge for electricity was reflected in the fuel and light figure for December. The figures for other groups of items showed little change in the period. The detailed figures for October to January were as follows:

(*Prices at June 17th, 1947 = 100*)

| *Date* | *Food* | *Rent and Rates* | *Clothing* | *Fuel and Light* | *Household Durable Goods* | *Miscellaneous Goods* | *Services* | *Drink and Tobacco* | *Total* |
|---|---|---|---|---|---|---|---|---|---|
| Weights . . . | 348 | 88 | 97 | 65 | 71 | 35 | 79 | 217 | 1,000 |
| Oct. 12th, 1948 . | 107·6 | 99·5 | 114·1 | 112·0 | 108·5 | 109·3 | 105·1 | 110·8 | 108 |
| Nov. 16th, 1948 . | 108·1 | 99·5 | 114·8 | 112·0 | 108·6 | 109·3 | 105·1 | 110·8 | 109 |
| Dec. 14th, 1948 . | 107·9 | 99·5 | 115·3 | 113·7 | 108·7 | 109·3 | 105·1 | 110·8 | 109 |
| Jan. 18th, 1949 . | 108·2 | 99·6 | 116·1 | 113·8 | 108·8 | 109·3 | 105·1 | 110·8 | 109 |

In publishing the figures the Ministry of Labour states that they are in the form in which they are used in the procedure adopted for calculating the index for all the groups combined, i.e. to the nearest first place of decimals. The decimals are shown only in order that, if desired, calculations can be made of the effect of combining particular groups and excluding others. The information available as to price changes, however, is such that no precise significance can be attributed to the decimals, and for any other purposes, therefore, the figures should be used to the nearest whole number.

---

The Ministry of Labour index of weekly wage rates, which rose from 106 to 107 in October, rose again to 108 in January. The latter rise, however, was only fractional, though it was sufficient to raise the figure quoted to the nearest whole number. The following is a summary of the figures since June, 1947, when the present series was instituted.

CC-0. In Public Domain. Gurukul Kangri Collection, Haridwar

Digitized by Arya Samaj Foundation Chennai and eGangotri



(*Wages Rates at End of June*, 1947 = 100)

| *Date (end of month)* | *Men* | *Women* | *Juveniles* | *All Workers* |
|---|---|---|---|---|
| June, 1947 | 100 | 100 | 100 | 100 |
| Sept., ,, | 101 | 101 | 102 | 101 |
| Dec., ,, | 103 | 103 | 106 | 103 |
| Mar., 1948 | 105 | 107 | 107 | 105 |
| June, ,, | 105 | 107 | 108 | 106 |
| Sept., ,, | 106 | 108 | 109 | 106 |
| Dec., ,, | 107 | 109 | 110 | 107 |
| Jan., 1949 | 107 | 109 | 110 | 108 |

---

The slight upward trend in the total working population continued in October and November, but there was a decline of 43,000 in December. The number of workers in civil employment also continued to rise in October and November, but fell by 63,000 in December. It was still, however, 265,000 higher than at the end of 1947. The following Table shows the figures for October to December:

(*Thousands*)

| | *Total Working Population (excluding indoor private domestic service)* | | | *Numbers in Civil Employment** | | |
|---|---|---|---|---|---|---|
| | *Men* | *Women* | *Total* | *Men* | *Women* | *Total* |
| Oct., 1948 | 14,575 | 5,786 | 20,361 | 13,543 | 5,666 | 19,209 |
| Nov., ,, | 14,562 | 5,809 | 20,371 | 13,528 | 5,688 | 19,216 |
| Dec., ,, | 14,562 | 5,766 | 20,328 | 13,512 | 5,641 | 19,153 |

* Including N.F.S., Police and Civil Defence.

The level of unemployment rose by 13,500 in November and by 48,500 in January. The following are the figures for October to January:

*Number of Unemployed Persons on the Registers of the Employment Exchanges of the Ministry of Labour and National Service*

| *Date* | *Men and Boys* | *Women and Girls* | *Total* |
|---|---|---|---|
| Oct. 11th, 1948 | 234,403 | 80,055 | 314,458 |
| Nov. 15th, ,, | 242,963 | 84,980 | 327,943 |
| Dec. 6th, ,, | 244,015 | 83,198 | 327,213 |
| Jan. 10th, 1949 | 279,524 | 96,189 | 375,713 |

The total for January, 1949, includes 43,557 married women and 7,158 ex-Service personnel who had had no employment since leaving the Forces. The totals do not include registered disabled persons who were classified as suitable only for employment under sheltered conditions.

---

CC-0. In Public Domain. Gurukul Kangri Collection, Haridwar

Digitized by Arya Samaj Foundation Chennai and eGangotri



## CURRENT NOTES

In 1947 the Minister of Health appointed a special committee to study the proposed Sixth Revision of the International List of Causes of Death and to recommend amendments or additions. This revision, expanded at long last to cover sickness statistics as well as those of death, has now been accepted by the World Health Organization and printed in English, French and Spanish for general international use. To keep this list under continual review and also to advise him more widely on statistical matters the Registrar-General has appointed a more permanent committee "to consider from the medical point of view and to advise upon questions affecting the International Statistical Classification of Diseases, Injuries and Causes of Death and any other matters concerning medical nomenclature or statistics which may from time to time by referred to the Committee." The membership of the Committee covers the wide fields of medicine—public health, medicine, surgery, paediatrics, psychiatry, general practice, obstetrics and gynaecology, and so on. Amongst its members are three Fellows of the Society, Professor Bradford Hill, Dr. P. L. McKinlay and Dr. Percy Stocks.

---

The 15th volume of the International Review of Statistics, *Metron*, is shortly to be published, edited by Professor Corrado Gini. Founded in 1920 by Professor Gini, the review was published for about twenty years under the direction of a scientific committee which included some of the best known names in international statistics. This committee, disbanded in 1940 because of the war, will be reformed as soon as communications with eastern Europe and Asia become easier.

As in the past, *Metron* will publish original articles on statistic methodology with applications and examples showing the scope of the methods, and each article will contain some contribution to the various fields of interest in statistics, without favouring any one school of thought. The articles will appear in the author's native language, if it is one of the following: Italian, French, English, Spanish or German. The 15th volume will consist of 500–600 pages, and will be out by May, 1949. The subscription for vol. 15 is 6 dollars, and the equivalent in other monies.

---

The Society was glad to receive a copy of the first number of a new journal entitled *Accounting Research*, published by the Cambridge University Press for the Incorporated Accountants' Research Committee. Two parts are expected to be published each year at 7*s.* 6*d.*, plus postage for each copy. Four parts go to the volume, the subscription to which, payable in advance, is 25*s.* post free.

The first number includes six articles dealing generally with certain aspects of accountancy. Some of these, however, will be of interest to economic statisticians, particularly, perhaps, "The Presentation of the Central Government Accounts," by F. Sewell Bray and Richard Stone. The book reviews would seem to appeal to the accountant rather than to the statistician or the economist.

It is clear that *Accounting Research* is intended to cover a field to which little attention has so far been given. The statistician in business whose work brings him into close touch with the financial records of his concern should find this new venture both interesting and useful.

---

CC-0. In Public Domain. Gurukul Kangri Collection, Haridwar

Digitized by Arya Samaj Foundation Chennai and eGangotri



## OBITUARY


| | PAGE |
|---|---|
| Clara Elizabeth Collet . . . . . | 252 |
| Wesley Clair Mitchell . . . . . | 254 |


### Clara Elizabeth Collet

Clara Collet was born on September 10, 1860, and had thus nearly completed her eighty-eighth year when she died on August 3, 1948. She was the first woman Fellow of University College, London, and her working life of forty-five years was one of strenuous endeavour for the improvement of women's status. She was elected to Fellowship of the Society in 1894 and served on the Council, with a few intervals, from 1919 to 1935. In March, 1898, she read a paper before the Society on "The Collection and Utilization of Official Statistics bearing on the Extent and Effects of the Industrial Employment of Women"—an elaborate study of the facts supplied by the official returns, of which in her position she had intimate knowledge, and of facts deducible from them or discoverable elsewhere. It may be noted that the general sense of her criticisms and suggestions largely corresponds with the findings of the Society's Official Statistics Committee in their report, published about forty-five years later. The paper of 1898 was Miss Collet's only full length contribution to the Society's Proceedings, but she wrote various short *Journal* papers and notes: "Statistics of Employment of Women and Girls" (1895); "The Social Status of Women Occupiers" (1898); "Cost of Food for an Adult Woman" (1906); the last of all, contributed as lately as 1945, on the death of Sir Hubert Llewellyn Smith, was "Charles Booth, the Denison Club, and H. Llewellyn Smith." This little paper, incidentally, gives some of Miss Collet's own history: how she began to study political economy as a compulsory subject for the London M.A. in Philosophy, which she designed to take as equipment for the teaching career she had begun seven years before, at Wyggeston Girls' School, Leicester, but in 1886 became one of Charles Booth's assistants on the London Survey.* After six years of work with him she remained for the rest of her life an ardent social investigator in the cause of women's welfare. In 1893 she went to the Board of Trade as Chief Investigator for Women's Industries, and the next year there appeared a "Report by Miss Collet on The Status of Employment of Women and Girls," and, in 1899, another on "The Money Wages of Indoor Domestic Servants." She also wrote the "Report" part of the second volume of the Wages Census (officially the Earnings and Hours Enquiry) of 1906. No one who consults these reports will have any doubt of Miss Collet's capacity for hard work, thorough investigation, clear thinking, and concise, lucid expression.

These various enquiries revealed the very low level of women's wages in general and led to the Trade Boards Act of 1906: and from that time Miss Collet's work mainly consisted in examining the statistics collected and preparing memoranda in connection with the application of the Act to different industries. The selection of appropriate industries was, in fact, largely based on her memoranda in the period before the 1914 war. It may be remarked in parenthesis that Miss Collet's own salary at that time afforded an example of the then general estimate of the worth of women's work. Some years after her appointment she was receiving £250 a year, and one of the senior officers of the Department pressed for an increase, contrasting her salary with that of a man doing similar work. The Treasury officials were really shocked at such a request and one asked what a woman could *possibly do* with more than £250 a year.

When the Labour Department of the Board was separated off in 1917 to become the Ministry of Labour ("I was there," said Miss Collet, "when Lloyd George created it, by telephone, one evening"), she continued her investigations and, after her retirement in 1920, was able to carry on her labours for women by serving on Trade Boards for the next eleven years. The last large task she undertook was for the *New Survey of London Life and Labour* (1930–35), under the direction of her former official chief, Sir Hubert Llewellyn Smith; to this she contributed the section on Domestic Service (Vol. II, ch. vii). With all this accomplishment and the exacting labour it entailed, Miss Collet found time for plenty of other activities. Her name appears with, among others, those of Henry Fawcett, Alfred Marshall, F. Y. Edgeworth, James Bonar, and Bernard Shaw on the list of those present at the inaugural meeting, in 1890, of the British Economic Association, later the Royal Economic Society; and she was a member of its Council from 1918 to 1940. She was also, with Edgeworth, Charles Booth, and Henry Higgs, one of the founders and,

* *Life and Labour of the People in London*, 1889–1891.

CC-0. In Public Domain. Gurukul Kangri Collection, Haridwar

Digitized by Arya Samaj Foundation Chennai and eGangotri



indeed, the initiator of the Economic Club, in whose lively discussions such non-members as Marshall and Keynes were fond of joining. Her daily work and her diversions brought Miss Collet into touch with all manner of people. In conversation, some chance remark would call out a string of reminiscences of well-known persons, including Karl Marx—whose daughter was a friend of hers—seen in his home. These recollections included many amusing, and sometimes surprising, anecdotes, racily told; notwithstanding her devotion to work and her immersion in the "dismal science," Miss Collet was of a lively disposition. A diary, kept in her Leicester days, is a gay document, recounting little excitements over new doctrines and dance partners, preachers and picnics, rambles—she was always fond of walking, and later took part in some of Professor Edgeworth's famous tramping parties. All she did was done with zest, to the end of her life. A paper, "Henry Higgs," written in her eightieth year for the *Economic Journal* is a good example of her quality and of her accurate memory.

One of her occupations in the last years was the sorting and arranging of a mass of family papers, and the pursuit of researches into the history of the Collet family. This begins with Rouen traders of that name, some of whom came to England soon after the Conquest, and then continued down the centuries, mostly as merchants, Dean Colet being the most conspicuous exception. In 1933 she edited "The Private Letter Books of Joseph Collet," a great-great-great uncle, who was an official of the East India Company and was appointed Governor of Madras in 1717.* Her MS. records included a great many letters written by her relatives and their friends in the late 18th and early 19th centuries, and she was engaged in selecting for publication those which threw light on the social conditions of the day and especially on the mental and moral qualities of the women correspondents. Possibly these letters suggested the idea she had at one time for a statistical study of social changes based on data to be extracted from novels. Biblical studies and ancient Jewish history in general were also among her interests. But Miss Collet's reading was wide and varied. She revelled in great poetry and all good literature, not English only she could read several other languages (including Hindustani; she had a number of Indian friends, among them Professor P. C. Mahalanobis, whom she brought into touch with the Society), and her talk was enlivened by apt quotation. One would say that her outstanding qualities were vigour and alertness of mind and body, sincerity and directness, practical common-sense, independence of judgement, and the courage of her opinions. These latter traits were probably not entirely ingratiating to her immediate official superiors, but her colleagues and subordinates found her "very pleasant to work with" and she was noted among her friends for her readiness to listen and to give weight to the opinions of others. She was indeed kindly; but she refused to be fettered by convention, custom, or anything that stood in the way of what she thought should be done—a characteristic gesture was her arrival at the Ministry, during the General Strike, in a hearse, which had offered the simplest way of getting there. She was, in fact, thoroughly practical and applied economic principles in her daily life—by which parsimony is by no means to be understood. On the contrary: Miss Collet was exceedingly generous, and, moreover, at a meeting of the Society's Council firmly denied that you should cut your coat according to your cloth. But she had no time to spend on trimmings which would have got in the way of things that really mattered. The garden of the little house she had for a time at Highgate was a riot of anything that liked to grow there—mostly St. John's wort, as it happened—and the result seemed to her just as it should be. Her practical sense also insisted on the removal, in 1936, of herself, her bachelor brother and two sisters (at ages averaging not far short of 80) from a tall house in London to a bungalow on top of the cliff at Sidmouth; and a judicious economy of time and trouble was shown in all her domestic arrangements. These, like everyone's, became more difficult as time went on. In 1947, Miss Collet, the last survivor of the family, was left alone and with very little domestic help; but nothing discouraged her; in January, 1948, she wrote "this year of complete solitude has done me no harm; and it has . . . made me aware of how easily I can look after my merely personal wants." Nor did her interest diminish in all that was happening. Her library list covered many subjects, from theology to novels; she read *The Times* thoroughly every day and solved the crossword, with particular relish for its more subtle ingenuities. Except for a liability to acute neuralgia, which kept her almost entirely indoors the last two years or so, she remained active in body, moving about the house with light quick steps, until a few months before her death. Even a couple of months before the end, her mind was busy with arrangements for her publications and she remained full of interest in the doings of her young relations, of whom she was very fond and proud. Few of her own contemporaries survive, but she remains alive in the minds of all who knew her.

C. T.

* The family has since produced another colonial governor, in her eldest brother, Sir Wilfrid Collet, who was Governor of British Guiana and of British Honduras successively.

CC-0. In Public Domain. Gurukul Kangri Collection, Haridwar

Digitized by Arya Samaj Foundation Chennai and eGangotri



The following note comes from Professor P. C. Mahalanobis:

I first met Miss Clara Collet in 1913 when I was a student in England. She was much interested in India, and had many Indian friends. One of her great-uncles had served in India under the East India Company. Her aunt, Sophia Dobson Collet, used to publish a Year-Book of the Brahmo-Samaj, giving a chronicle of the liberal theistic movement in India, and she wrote a biography of its founder, Ram Mohan Roy. There was close contact between the leaders of the Brahmo-Samaj and the Collet family; I myself belong to the Brahmo-Samaj, and was introduced to Miss Collet by a friend.

In 1913 she was still working in the Civil Service. She had gathered round her a circle of friends with broad intellectual interests, who used to meet in the evening in a small flat in Holborn, where she was then living. I and other Indian students would sometimes join this group. Miss Collet would pour out coffee and would constantly make penetrating observations and witty remarks with a twinkle in her eyes.

She was keenly interested in statistics. Through her I came to realize, for the first time, the importance of statistics, with which I had no direct concern at that time, as I was studying mathematics and physics. She had an extremely critical mind. Speaking of a recently published book on human heredity, she remarked, with a dry smile, that the author had taken great pains to collect a large mass of evidence in favour of his own theory. She had a keen sense of humour, and made many witty remarks on the controversy about the relative importance of nature and nurture in which Karl Pearson was engaged at that time. I did not meet Karl Pearson in my student days, but learned a good deal of his work indirectly through Miss Collet.

After my return to India in 1915, I occasionally wrote to her. In 1926 when I went to England with my wife, Miss Collet had retired from Government service, and was living in a new colony at Highgate, where we went to see her. We were both deeply touched by the kind way in which she received us. By this time, I had started working seriously in statistics, which pleased her immensely. She took me round to the Royal Statistical Society to attend a monthly meeting. This was my first visit, which, aided by Miss Collet's persuasion, led me to become a Fellow of the Society.

She had a brilliant mind, and a charming personality; and always looked on the brighter side of things. I consider myself fortunate in having come into close contact with her when I was young, and I recognize her formative influence on my life in many ways. It is my great regret that, although I was in England several times during the last two years, I was unable to meet her once more before her death.

P. C. M.

## Wesley Clair Mitchell, 1874–1948

With the death of Wesley Clair Mitchell at the age of seventy-four American economics has lost one of its most distinguished figures and, perhaps, the most representative one. Apart from his important contributions to particular problems, he probably contributed more than any other economist of his generation to shape the general approach to the subject which during the last thirty years has been distinctive of much of the work done in the United States.

Trained originally in Chicago in the orthodox classical tradition, represented by J. L. Laughlin, Mitchell came soon under the decisive influences of Thorstein Veblen and John Dewey. Although he made himself thoroughly familiar with contemporary economic theory, and through a great part of his career as a teacher devoted his main course of lectures to a discussion of its development, he regarded its usefulness as somewhat limited, and devoted his efforts to the development of a different approach which seemed to him more in the spirit of empirical science, and for which he drew largely on the inspiration of Veblen, Dewey, and the German Historical School. It was from these efforts of his more than from those of any other man that sprung that "institutionalist" school of economics which in the 1920's found its most active protagonists at Columbia University, where Mitchell taught since 1914, and in the 1930's exercised great influence on the economic policies of President Roosevelt.

Mitchell's research work was devoted almost entirely to problems on the borderline of economics and statistics. After two studies on the monetary problems of the "Greenback" period, published in 1903 and 1908, he turned to the investigation of the problem of industrial fluctuations, and in 1913 brought out his monumental work on *Business Cycles*, which rapidly became a classic, and which has probably influenced development in this field during the following twenty years more than any other work. The subject remained Mitchell's central interest, to which most of his technical work was devoted for the remainder of his life. His further contributions to it consist as much in the work of a devoted group of collaborators and pupils, whom he inspired and assisted, and in the research organization he created as in his own later publications.

CC-0. In Public Domain. Gurukul Kangri Collection, Haridwar

Digitized by Arya Samaj Foundation Chennai and eGangotri



The National Bureau of Economic Research in New York, which he founded after the first great war, is probably much the most successful institution of its kind anywhere. In addition to directing all its activities for twenty-five years, Mitchell took special charge of the series of special studies which aimed at superseding his early single-handed effort by a more comprehensive survey of the whole problem of cyclical fluctuations. A first volume of the new great work he had planned appeared in the series of publications of the Bureau in 1927, under the title *Business Cycles, the Problem and its Setting*. A second volume, *Measuring Business Cycles*, produced jointly with Dr. A. F. Burns, later his successor as Director of the Bureau, appeared only in 1946. A further volume which was to sum up the main conclusion of a quarter century's work in this field was said to be practically completed some time before Mitchell's death.

Mitchell's interests and activities were, however, far more extensive than this sketch of his persistent main aim would suggest. For many years public duties claimed much of his time. And although he will probably be mainly remembered for his path-breaking work in a special field, his interests and general outlook were almost as much that of a philosopher as of a specialist. The character and significance of the social sciences and their function in society were at least as persistent a problem to him as those of the special field in which he himself experimented with new techniques. A collection of his essays published in 1937 under the title *The Backward Art of Spending Money* gives perhaps the best impression of the range of his interests, and of the character of his methodological views. Equally, a volume of essays by his pupils and admirers published in his honour two years earlier under the title *On the Changing Structure of Economic Life* gives some indication of the influence of his ideas. Even to one who knew Mitchell only slightly it is not difficult to see how this influence must have been magnified by the power of his personality, and by the example of single-minded devotion to a scientific ideal.

F. A. Hayek.

CC-0. In Public Domain. Gurukul Kangri Collection, Haridwar

Digitized by Arya Samaj Foundation Chennai and eGangotri



## STATISTICAL AND ECONOMIC ARTICLES IN RECENT PERIODICALS

UNITED KINGDOM—

*The Banker*—

*August* 1948—The German currency reforms: *S. Schattman.* Monetary systems of the Colonies: II—West Africa: *A Special Correspondent.*

*October* 1948—The twilight of disinflation: unstable France: *P. Uri.* New Zealand's exchange revaluation: *A Banking Correspondent in Melbourne.* Banking in the Soviet Zone: *S. Schattman.* Monetary systems of the Colonies: IV—Hong Kong: *A Special Correspondent.* Experiments in central banking: *N. A. D. Macrae.*

*The British Journal of Social Medicine*—

*July* 1948—American medical services: *T. McKeown.* The significance of nuptiality with respect to interpretation of sex differences: *M. M. Johnstone* and *M. E. Hosker.*

*Economica*—

*August* 1948—The valuation of the social income—a comment on Professor Kuznets' reflections: *J. R. Hicks.* On the theory of the centrally administered economy: an analysis of the German experiment. Part II: *W. Eucken.* Wire broadcasting in Great Britain: *R. H. Coase.*

*Economic Journal*—

*September* 1948—Private enterprise and socialism: *Lord Brand.* Demand and supply of money: *G. F. Thirlby.* Britain's U.S. dollar problems 1939–45: *D. F. McCurrach.* Real economies and the balance of industry: *A. M. de Neuman.*

*Eugenics Review*—

*October* 1948—Migration and the British Commonwealth: *Brinley Thomas.* The age-structure of our population: *Sir C. Arden-Close.* Mental health survey in a rural area: *W. Mayer-Gross.*

*Faculty of Actuaries, Transactions*—

Vol. XVIII, Part VI—Vital statistics: their collection and analysis: *P. L. McKinlay.* Some recent actuarial developments in the United States of America: *J. B. Maclean.* Continuous mortality investigation: annuitants' experience.

*Heredity*—

*September* 1948—The estimation of gene frequencies from family records. I. Factors without dominance: *D. J. Finney.* A twelfth linkage group of the house mouse: *R. A. Fisher* and *G. D. Snell.*

*Institute of Actuaries, Journal*—

*June* 1948.—The effects on mortality of recent advances in treatment: *Sir J. Conybeare.* A comment on interpolation in two variables: *A. W. Joseph.* The analysis of heterogeneous mortality data: *L. Solomon.* Rural districts male mortality, 1920–22, combined with Manchester unity sickness experience, 1893–97, Occupation Group A.H.J. Continuous mortality investigation: annuitants' experience.

*Manchester School of Economic and Social Studies*—

*September* 1948—Planning and spontaneous order: *M. Polyani.* Municipal transport costs and revenue: 1938–9 and 1945–6: *J. F. Sleeman.*

*Oxford University Institute of Statistics Bulletin*—

*July and August* 1948—Discrimination: *T. Balogh.* The fall in consumption—a rejoinder: *R. F. Harrod.* An economic survey for Sweden: *G. Cederwall.* The increase in the middle-class cost of living: *D. Seers.*

*September* 1948—Intra-European clearing: *T. Balogh.* The fall in consumption: *G. D. N. Worswick, E. F. Jackson* and *R. F. Harrod.*

*October* 1948—The national product before and after the war: *D. Seers.* The abolition of food subsidies: *T. Balogh.*

CC-0. In Public Domain. Gurukul Kangri Collection, Haridwar

Digitized by Arya Samaj Foundation Chennai and eGangotri



*Population Studies*—
*September* 1948—Recent developments in Swedish population policy. Part 2: *H. Gille.* Some observations on the population of British Guiana: *G. W. Roberts.* Family allowances in France: *J. Doublet.* An analysis of the sources and magnitudes of inconsistencies between male and female net reproduction rates in actual populations: *P. H. Karmel.*

*Quarterly Journal of Mathematics*—
*September* 1948—A class of complex Markoff chains: *P. A. P. Moran.*

*Review of Economic Studies*—
Vol. XV (2), No. 38—The Belgian monetary reform: *V. A. de Ridder.* Central planning in the Netherlands: *J. Tinbergen.* Saving and investment in a socialist state: *F. J. Atkinson.* A constant-utility index of the cost of living: *L. R. Klein* and *H. Rubin.*

*Royal Society of Edinburgh, Proceedings*—
Vol. LXII, Part III—On a problem in correlated errors: *A. C. Aitken.*

AUSTRALIA—
*Economic Record*—
*June* 1948—Australian tariffs and imperial control: *J. A. La Nauze.* Wartime changes in the New Zealand economy: *C. G. F. Simkin.* Sterling as an international currency: *B. Tew.* Fluctuations in the sheep population of New South Wales, 1860–1940: *R. S. G. Rutherford.* The Australian housing cost index: *R. Mendelsohn* and *J. M. Hamilton.*

INDIA—
*Calcutta Statistical Association, Bulletin*—
*March* 1948—Standardisation of quality control. Sampling for health survey: *K. K. Mathen.* Crop estimation and agricultural meteorology; *P. K. Bose.* Indian Science Congress: Statistical Conference, Singapore.
*August* 1948—Choosing a random sample: *H. K. Nandi.* Practical problems in constructing cost of living index: *K. K. Kar.* Setting tolerance limits: *P. K. Banerjee.* Quality control in Indian industry.

*Indian Journal of Economics*—
*April* 1948—Marketing and production control in the Indian jute textile industry (1884–1943): *S. R. Sen.* Forest policy for Bengal: *R. C. Ghosh.* Prospects of cotton mill industry in Bengal: *N. K. Das.*

*Sankhyā*—
*October* 1948—Ancillary statistics and fiducial distributions: *A. R. G. Owen.* Notes on testing of composite hypotheses—II: *S. N. Roy.* A test for field uniformity based on the space correlation method: *M. N. Ghosh.* Crop-cutting experiment on sugarcane in a farm cultivation: *J. M. Sen Gupta.* Walter A. Shewhart and statistical quality control in India: *P. C. Mahalanobis.*

UNITED STATES—
*American Academy of Political and Social Science, Annals*—
*July* 1948—Looking toward one world. (Whole number.)
*September* 1948—Parties and politics: 1948. (Whole number.)

*American Economic Review*—
*September* 1948—The European recovery program: *G. Haberler.* Hungary's monetary crisis: *B. Nogaro.* Price flexibility and full employment: *D. Patinkin.* Central banks and the State to-day: *M. A. Kriz.* Collective bargaining, Keynesian model: *O. W. Phelps.* Inflation and deflation in Italy: *A. O. Hirschman.*

*American Statistical Association, Journal*—
*June* 1948—The War Production Board's statistical reporting experience: *G. A. Steiner* and *D. Novick.* On pooling data: *F. Mosteller.* On estimating precision of measuring instruments and product variability: *F. E. Grubbs.* Statistics in insurance (3 articles): *F. J. McDiarmid, E. A. Lew* and *M. D. Miller.*

CC-0. In Public Domain. Gurukul Kangri Collection, Haridwar

Digitized by Arya Samaj Foundation Chennai and eGangotri



*September* 1948—Significance of inventories in the current economic situation: *L. J. Paradiso.* Measuring physical inventories: *W. M. Brown.* On the determination of sample sizes in designing experiments: *M. Harris, D. G. Horvitz* and *A. M. Mood.* Application of the theory of extreme values in fracture problems: *B. Epstein.* Statistics in insurance. IV. Problems with sampling procedures for reserve values: *G. C. Campbell.* Statistics in insurance. V. Recent developments in graduation and interpolation: *T. N. E. Greville.* Statistics in insurance. VI. Sampling errors in mortality and other statistics in life insurance: *D. D. Cody.* The edge-marking method of analyzing data: *L. L. Thurlstone.* The War Production Board's statistical reporting experience, Parts II and III: *D. Novick* and *G. A. Steiner.*

*Annals of Mathematical Statistics*—

*September* 1948—A class of statistics with asymptotically normal distribution: *W. Hoeffding.* Optimum character of the sequential probability ratio test: *A. Wald* and *J. Wolfowitz.* Limiting distribution of a root of a determinantal equation: *D. N. Nanda.* On a source of downward bias in the analysis of variance and covariance: *W. G. Madow.* Mixture of distributions: *H. Robbins.* Some applications of the Mellin transform in statistics: *B. Epstein.* The estimation of linear trends: *G. W. Housner* and *J. F. Brennan.* On the effect of decimal corrections on errors of observation: *P. Hartman* and *A. Wintner.* Weighing designs and balanced incomplete blocks: *K. S. Banerjee.* Bounds for some functions used in sequentially testing the mean of a Poisson distribution: *L. H. Herbach.* The distribution of student's $t$ when the population means are unequal: *H. Robbins.* A distribution-free confidence interval for the mean: *L. Guttman.* On the compound and generalized Poisson distributions: *E. C. Maceda.* On confidence limits for quantiles: *G. E. Noether.* A lower bound for the expected travel among $m$ random points: *E. S. Marks.* A matrix arising in correlation theory: *H. M. Bacon.* Table of normal probabilities for intervals of various lengths and locations: *W. J. Dixon.* Correction to "On the Charlier type B series": *S. Kullback.* Correction to "A note on the fundamental identity of sequential analysis": *G. E. Albert.*

*Biometrics*—

*June* 1948—The statistical organization of nervous activity: *W. S. McCulloch* and *W. Pitts.* Experimental design in comparison of allergens on cattle: *F. M. Wadley.* The general theory of prime-power lattice designs. II. Designs for $p^n$ varieties in blocks of $p^s$ plots, and in squares: *O. Kempthorne* and *W. T. Federer.* Assays of insulin with one blood sample per rabbit per day: *D. M. Young* and *R. G. Romans.*

*September* 1948—The analysis of covariance: *D. B. Delury.* An experimental design used to estimate the optimum planting date of cotton: *R. L. Anderson* and *H. L. Manning.* On the use of parallel or nonparallel systems of transformed curves in bio-assay: illustration in the quantitative complement-fixation test: *W. R. Thompson.*

*Econometrica*—

*July* 1948—Irving Fisher's econometrics: *J. A. Schumpeter.* Sur la possibilité de construction de certains macromodèles: *A. Nataf.* The decisions of a committee using a special majority: *D. Black.* The elasticity of committee decisions with an altering size of majority: *D. Black.*

*October* 1948—Homogeneous systems in mathematical economics: *G. Tintner.* The pure theory of production applied to the French gas industry: *M. J. J. Verhulst.* Some conditions of macroeconomic stability: *D. Hawkins.* A note on the statistical estimation of supply and demand relations from time series: *M. S. Bartlett.* Remarques et suggestions relatives aux nombres-indices: *A. Nataf* and *R. Roy.* A theoretical and statistical dilemma —the contribition of Burns, Mitchell, and Frickey to business-cycle theory: *E. Ames.*

*Harvard Business Review*—

*September* 1948—Problems in reporting corporation income: *G. D. Bailey.* The reality of inventory profits: *C. A. Bliss.* Industrial relations with professional workers: *H. R. Northrup.* Indirect approach to market reactions: *L. Cheskin* and *L. B. Ward.* Western Europe's attack on inflation: *F. H. Klopstock.*

*Journal of Political Economy*—

*August* 1948—The utility analysis of choices involving risk: *M. Frieman* and *L. J. Savage.*

*October* 1948.—Postwar political economy: the President's reports: *M. Bronfenbrenner.*

CC-0. In Public Domain. Gurukul Kangri Collection, Haridwar

Digitized by Arya Samaj Foundation Chennai and eGangotri



Keynes and the economic system: *C. B. Hoover.* European multilateral clearing: *R. W. Bean.* The role of dissaving in economic analysis: *G. Garvy.* Price inflexibility—war and postwar: *J. Backman.* Soviet postwar industrial production: *H. Schwartz.*

*Mathematical Tables and Other Aids to Computation—*
*July* 1948—The IBM pluggable sequence relay calculator.

*Milbank Memorial Fund Quarterly—*
*July* 1948—Summary of the demographic background of problems of undeveloped areas: *F. W. Notestein.* The first step in the international approach to the problems of underdeveloped areas: *H. Laugier.* International approaches to economic development of undeveloped areas: *D. Weintraub.* Financial aspects of international approaches to problems of undeveloped areas: *L. B. Rist.* Social aspects of rural industrialization: *S. H. Thompson.* Health aspects of international approaches to problems of undeveloped areas: *W. P. Forrest.* Underdeveloped areas in social evolutionary perspective: *Sir R. Cilento.* Puerto Rico's population problem: research and policy: *K. Davis.* Problems of reconstruction in Puerto Rico: *R. G. Tugwell.*

*Quarterly Journal of Economics—*
*August* 1948—The impact of alternative tax structures on personal consumption and saving: *R. A. Musgrave* and *Mary S. Painter.* Regional multilateral payments arrangements: *R. F. Mikesell.* The structure of the market in undeveloped economies: *M. Solomon.* The inflation in China: *A. C. Huang.* Key German cartels under the Nazi regime: *P. C. Newman.*

*Review of Economics and Statistics—*
*August* 1948—Discussion of the new department of commerce income series. National income: a new version: *S. Kuznets.* Objectives of national income measurement: a reply to Professors Kuznets: *M. Gilbert, G. Jaszi, E. Denison* and *C. Schwartz.* Further comments on the Department of Commerce Series: *M. Kalecki.* The pattern of food expenditure: *Dorothy S. Brady* and *Helen Barber.* The comparability of national income statistics of English-speaking countries: *W. I. Abraham.* Shifts in the concentration of income: *Mary W. Smelker.* The interest-rate structure: *E. Marcus.*

BELGIUM—
*Bulletin de l'Institut de Recherches Économiques et Sociales—*
*August* 1948—Les finances publiques belges: *A. E. Janssen.* Les finances privées: *C. Roger.* Le mouvement social en 1947: *A. Woronoff.* La situation inquiétant de l'industrie houillère belge: *C. D. de Lespaul.* La métallurgie en 1947: *R. de Strycker.* La construction: *A. Vasanne.* L'évolution de l'agriculture belge en 1947: *K. Pinxten.* La situation du commerce extérieur en 1947 et au début de 1948: *J. Jussiant.* Prix, consommation, balance et revenus : *F. Baudhuin.* La situation économique du Congo belge: *M. Masoin.*
*October* 1948—Le problème des finances publiques en Belgique et la politique économique: *J. Jussiant, C. Roger* and *P. van der Rest.* Esquisse d'une analyse du phénomène de substitution: *R. Lamy.* Les conceptions dirigistes aux Pays Bas: *J. van der Mensbrugghe.*

FRANCE—
*Journal de la Société de Statistique de Paris—*
*July–August* 1948—Un nouvel instrument de travail statistique: le fichier des établissements industriels et commerciaux ?: *G. Chevry.* L'économie dirigée: ses rapports avec la statistique: *L. de Riedmatten.* Essai sur les courbes de distribution statistique: *R. Risser.*

*September–October* 1948—La méthode Harvard pour la prévision des crises et les perspectives actuelles aux États-Unis: *le Baron Mourre.* Intérêt et productivité sociale: *M. Allais.* Note relative aux surfaces de probabilité: *R. Risser.* Ajustement d'une ligne polygonale: *M. Wolkowitsch.*
*Population—*
*July–September* 1948—Aspects historiques et contemporains de l'immigration australienne: *W. D. Borrie.* Conséquences et intérêt démographiques de la peste noire de 1348: *Y. Renouard.* La situation demographique de l'Italie: *G. Tagliacarne.* Répercussions des calamités de guerre sur la première enfance: *H. Bergues.* Les conditions d'existence des familles. Les dépenses d'habillement: *A. Girard.*

CC-0. In Public Domain. Gurukul Kangri Collection, Haridwar

Digitized by Arya Samaj Foundation Chennai and eGangotri


*Revue d'Économie Politique*—
*May–June* 1948—Du concept d'équilibre en économie politique: *L-H. Dupriez.* Le problème de l'Union économique douanière: *R. Courtin.* La Banque d'exportation et d'importation de Washington: *R. Servoise.*

HOLLAND—
*Statistica*—
Vol. 2, No. 4—Toevalsfrequenties, een hulpiddel bij de constructie van kunstmatige steekproeven van grote omvang: *H. C. Hamaker.* Mogelijkheden en moeilijkheden bij het toepassen van de sequentie-test: *J. H. Enters.* Statistisch onderzoek van contrôle-analyse cijfers (De verdeling van het droge-stofgehalte van het brood tijdens de tweede wereldoorlog): *Th. Hekker* and *J. Straub.*

*Statistische en Econometrische Onderzoekingen*—
*September* 1948—Enige beschouwingen over steekproven.

ITALY—
*Giornale degli Economisti e Annali di Economia*—
*March–April* 1948—Il concetto di "residuo" in Pareto: *F. Burzio.* Schema di un metodo statistico per lo studio dei problemi della nutrizione: *L. Bruni.*

*Statistica*—
*January–March* 1948—Osservazioni su alcune medie continue: *V. Castellano.* Teorie statistische della significatività e conformità dei risultati sperimentali agli schemi teorici: *G. Pompilj.* Aspetti economici e finanziari della vita di una grande università italiana: *G. Ferrari.* Un indice bilaterale di correlazione: *O. Capoccia.* Applicazioni della media esponenziale in matematica finanziaria e demografia: *W. de Floriani.* Su un nuovo metodo di calcolo dello scostamento semplice medio: *A. Sofia.* Sulla "procreazione pianificata" negli Stati Uniti d'America: *A. de Polzer.*
*April–June* 1948—Interpolazione di serie cicliche: *U. Teatini.* Il rendimento scolastico differenziale degli alunni e delle alunne secondo l'età: *T. Salvemini.* Analisi dell distribuzione fondiaria in Italia: *A. de Polzer.*

SWITZERLAND—
*Mitteilungen der Vereinigung Schweizerischer Versicherungsmathematiker*—
*October* 1948—Bemerkungen zu den Sterbetafeln von J. H. Lambert: *M. E. Eisenring.* Erwägungen über abhängige und unabhängige Wahrscheinlichkeiten: *H. Wyss.* Introduction to a mathematical theory of the graded stationary population: *S. Vajda.*

*Schweizerische Zeitschrift für Volkswirtschaft und Statistik*—
*June* 1948—Die Konventionen von Bretton Woods und die schweizerische Währungspolitik: *T. Keller.* Die Welthandels-Charta von Havanna: *W. Stucki.* De la Conférence des Seize à l'Organisation de Coopération économique: *G. Bauer.*
*August* 1948—Die Einkommensteuer in Bunddesstaaten: *W. Bickel.* Réforme des finances fédérales et marché financier: *C. Lasserre.* Sparen und Investieren: *H. G. Bieri.* The investment gap: *L. A. Hahn.*

INTERNATIONAL—
*International Labour Review*—
*June* 1948—From social insurance to social security: *P. Laroque.* Sixth International Conference of Labour Statisticians.
*August* 1948—Social security in Czechoslovakia. Rehabilitation of displaced persons in India.
*September* 1948—International comparisons of productivity: *L. Rostas.* Social insurance in post-war Germany: *M. Bloch.* International co-operation and the recovery of the European iron and steel industries: Some aspects of the international migration problem: *A. Sauvy.*

*Revue de l'Institut International de Statistique*—
Vol. 15, No. 1/4—The Twenty-fifth Session, Washington, D.C., September 6–18, 1947: *S. A. Rice.* Quelques estimations de l'influence des contingentements 1933–1938 sur l'emploi aux Pays-Bas: *J. Tinbergen.* Statistical relations and their inversions: *C. Gini.*

CC-0. In Public Domain. Gurukul Kangri Collection, Haridwar

Digitized by Arya Samaj Foundation Chennai and eGangotri




# Journal of the Royal Statistical Society

SERIES A (GENERAL)

PART IV, 1948.


## CONSUMER EXPENDITURE IN INDIA, 1931–2 TO 1940–1

By R. C. DESAI

(King's College, Cambridge)

[Read before the ROYAL STATISTICAL SOCIETY, 18th May, 1948, The PRESIDENT, DR. DAVID HERON, in the Chair]

Sections:


| | PAGE |
|---|---|
| 1. Introduction | 261 |
| 2. Geographical Coverage | 262 |
| 3. Statistical Background | 263 |
| 4. Current Values | 264 |
| 5. Imputed Values | 268 |
| 6. Reliability | 271 |
| 7. Group Distribution of Total Expenditure | 273 |
| 8. Distribution of Food Expenditure | 277 |
| 9. Growth of Consumption in "Real" Terms | 278 |


Appendices:


| | |
|---|---|
| A. Official Estimates of the Production of Crops | 283 |
| B. Estimation of the Consumer Purchase of Crops | 288 |
| C. Prices and Valuation of Cereals and Pulses | 289 |
| D. Notes on Individual Items in Table 1 | 293 |
| E. Comparison with the Estimate of National Income | 297 |


### 1. *Introduction**

1.1. THIS essay presents the results of an investigation into the consumer expenditure in India for the ten years 1931–2 to 1940–1.

1.2. The term "consumer expenditure" is used throughout to cover all expenditure by families and individuals on current goods and services. Production and consumption being a continuous process, at any moment of time commodities and services are at various stages in their progress to the final consumers. A valuation of consumer expenditure involves ascertaining the paid or imputed values of commodities and services at a fixed point—"when they are in the form and at the place that render them immediately available for use" by the final consumers. All expenditure chargeable to business account is, therefore, excluded except "where the object purchased is resold to persons as part of a composite product or service" which could not be independently estimated except as a total of individual expenditures on constituent items. Since expenditure from private incomes alone is considered we exclude all government expenditure. We exclude

* For nearly three-quarters of a century attempts have been made to give a quantitative precision to the generally accepted fact of the poverty of the Indian population. The quest for this elusive figure of the national income has excited some emotion, and its absolute level has been influenced by the political prejudice of the author. If he was a critic of the British Administration the figure of the national income per head of the population was low, and high if he was instead an apologist. One of these earlier attempts was a similar paper read before the Society (in the absence of the author) by Fred Atkinson in 1902 ("A Statistical Review of the Income and Wealth of British India," *J. R. Statist. Soc.*, 65, Part II, pp.209–272). But for reasons of space I should have yielded to the temptation to review the work done since. A short summary, however, may be found in *An Essay on India's National Income, 1925–1929* (1939) by Dr. V. K. R. V. Rao (pp. 9–45). If we add Dr. Rao's own attempts for 1925–1929 (*ibid.*) and 1931–2 *National Income of British India, 1931–2* (1940)), this sums up about all the work that has been put into this field. This present work is the only attempt to examine the question on the expenditure side.



CC-0. In Public Domain. Gurukul Kangri Collection, Haridwar

Digitized by Arya Samaj Foundation Chennai and eGangotri



all direct taxes as direct deductions from incomes, also fees, fines, etc., items of expenditure in lieu of which no specific service is provided and also savings from personal incomes. While the amount spent on the purchase of any commodity or service is generally accepted as a measure of the current use made of it, the acquisition of residential property is excluded. Instead, rents paid in respect of all dwellings, whether new or old, are assumed to measure their current services. The value of services rendered to the consumers by the current accounts of banks and post offices and by life insurance companies is measured by the current expenditure of such enterprises on the provision of these services.

1.3. In all practical attempts to build up quantitative estimates of this sort one cannot stress too much the limitations of such work. Most of our current estimates will have to be discarded if measurement of welfare is to be our objective. To be "better off" is a state of mind we have yet to learn how to measure. Consumer expenditure in a monetary economy can only include a total of exchange values and, except for a few conventional items, tends to exclude all the services not rendered for monetary rewards. Both consumer purchase and national income will be reduced if a man marries his nurse. International and intertemporal comparisons are also severely restricted. Greater earnings on rents to-day than in the past, or in towns than in the country, are indicative of congestion and shortage rather than abundance. Greater expenditure on clothing in the United Kingdom may only mean a more severe climate than, say, in India, and if one believes happiness to lie in decreasing wants, a relative fall in consumer purchase may not be inconsistent with an increase in welfare.

1.4. The object of this paper is to construct the first step in the building up of an estimate of gross and net national expenditure similar to the estimates available for the western countries. In this sense it attempts to be a measure of the sum total of "utilities" in this instance, utilities involving expenditure from personal incomes. In India, a larger sector of the population than in the West satisfies some of its wants outside the money economy, and the need to make the estimates comparable with those for such economies has created problems of imputing values, which are more or less arbitrary. The three significant items in imputed values are:

(*a*) Producers' retention of farm products and wages paid in kind to agricultural labourers and village artisans;

(*b*) services of housewives on farms and for cleaning and grinding of grains; and

(*c*) rental value of owner-occupied houses.

Imputation of the first is not unknown in the West, but in India its significance is much greater. In the second, grains are not supposed to be finished commodities till they are readily available for cooking, hence the services of housewives in grinding and cleaning are included. Cooking and other domestic services of housewives are excluded on conventional rather than logical grounds. Owner-occupied houses, mostly huts, cover practically all rural housing. In some cases assessment of values is simply not possible, and is therefore not attempted. For instance, the hospitality of one's relatives reduces the need for services rendered by hotels in a different social set-up. These intangible assets, or liabilities, of social institutions such as the joint family system or of factors such as climate could not possibly be included.

## 2. *Geographical coverage*

2.1. The term "India" refers for the purposes of this essay to the present dominions of India and Pakistan and the princely states included in or associated with them. In human terms the estimates presented here relate to 338 million heads in 1931 at the beginning of the period of the inquiry and 389 millions in 1941 at its end. The term "British India" refers to the former Governors' and Chief Commissioners' Provinces now included in India and Pakistan, and thus excludes Burma and Aden, which were part of British India in 1931. The term "Government" or "Government of India" is ordinarily used to refer to the pre-Transfer British Administration at New Delhi known as the Central Government, which, together with the Provincial Governments, was responsible (each within its specified fields) for the direct administration of the Provinces, and which exercised a varying degree of control over and co-ordination of the administration of the States. The collection of primary statistics was the concern of the Provincial Governments, but it was the Central Government which was responsible for their co-ordination and, in most cases, their publication.

CC-0. In Public Domain. Gurukul Kangri Collection, Haridwar

Digitized by Arya Samaj Foundation Chennai and eGangotri



2.2. The basic unit of British India administration, however, has been the "district," into a number of which each province is divided, the number varying with size and population. Thus a small province like Orissa has only 6 districts, while the United Provinces of Agra and Oudh has 48. The most important statistical information in official publications is available in separate provincial issues giving information for each of the districts. It is not possible to secure a break-up beyond the district. The present frontiers of Pakistan and India have involved cutting up districts as well, and it is not possible therefore to form separate estimates for the two Dominions accurately from the data at present available. Much information is not published for units smaller than the province, and even a broad break-up of these would involve considerable inaccuracy. In some cases we do not get even a provincial break-up. In the present estimates where separate information was available for each of the provinces and some of the major states or state blocs, this has been prepared in detailed tables. For lack of space these are not included in this paper, which contains only all-India figures.

2.3. The inclusion of the native states was unavoidable. It is easier to estimate income or production for British India alone, but consumption crosses the administrative frontiers, and there being no customs walls, it is not possible to isolate the consumption of British India from that of the native states. I have gone through practically all the official and unofficial data available in respect of the states, particularly administration reports, which vary a great deal in respect of quality. The mosaic, however, defies all definition, and in the notes to the estimates in this essay (Appendices A to D) the description refers mainly to British India publications. Generally speaking, the information in respect of the states follows the lines of major British India publications, and suffers from the same limitations. There is a total blackout on a great many relevant aspects, and the patches of light here and there are of a very poor quality indeed.*

## 3. *Statistical background*

3.1. In order to supplement what was available in the published official statistics at the India House Library, I went to India, and under the kind sponsoring of the Economic Adviser to the Government of India was able to go through the various files in the departments and record offices at Delhi, Calcutta and Simla. The work was not easy. The war had just ended, and practically every officer was engaged on post-war readjustment work. The most upsetting factor was political uncertainty. Great changes were planned one day and thrown over the next in view of the political weather forecast. In that situation work of this sort could not secure adequate attention and support. Thus while some Central Government Departments were persuaded to undertake or sponsor some of my inquiries with the Provinces, they could see no reason, in view of the Cabinet Mission's plan, for bothering about economic affairs with which the Centre was to be no longer concerned.

3.2. I also persuaded some of the officials to address private firms, and gained some useful information which otherwise I could never have obtained. The answers to requests of this type, though invited by the Government, could only be voluntary, and many firms did not wish to add to the number of forms they were already filling up under compulsion. In some cases where I failed to get the desired sponsoring I personally called on a number of firms and control officers, and presented my references from the Economic Adviser and from Manufacturers' Associations and Merchants' Chambers. I have come to the conclusion, however, that not much can be gained by this type of statistical "private enterprise." In a varied inquiry of this sort it would be tedious to recount the hundreds of letters sent and the information asked for, the number of replies received and the percentage of refusals. While there is a chance that specific information may be gained, this adventure should not be undertaken if one is aiming at securing a sample. The replies have hardly any scientific value.

* The mass of material that is available for British India, however, has been an agreeable surprise. A government ruling a foreign people from a distance of thousands of miles had to insist that every one of its officials wrote down and dispatched a detailed account of the people he handled, and this has proved a blessing for a statistical antiquarian. Thus from the monumental *Gazetteers* and Sir George Watt's famous *Dictionary of the Economic Products of India* down to the pettiest administration report, all with a high literary quality, have been pressed into service at some point or the other.

CC-0. In Public Domain. Gurukul Kangri Collection, Haridwar

Digitized by Arya Samaj Foundation Chennai and eGangotri



3.3. The real advantage of the journey was an opportunity for first hand contact with the raw material from which official statistics are prepared, and often quite as important, with the men responsible for their collection, compilation and publication. Practically every department of the Government, except the Department of Agriculture, seems to share the impression that statistics can be obtained by the good old method of "inquiries." The various Commissions and Committees of Inquiry have gone the same way. Whenever information is needed the Government of India sends a circular letter to the provincial Governments asking for their "estimates,"* and on the basis of some of the round figures so obtained a table is prepared, and in many cases finds publication in that form. Most of the official information is thus a product of such inquiries, which may have some administrative use. But a statistician must disabuse his mind with regard to the sampling value of this medley of subjective opinions. What the country has been accepting in the case of the recent estimates of crop yields has come to permeate all aspects of statistical estimation. In India we can never expect a census of production or sales which will cover the economic activity of the largest section—the entire rural population. Only scientific sampling can provide a good basis on the many problems of rural life in India, on which accurate knowledge is so meagre and yet so vital. It is not within the scope of this essay to outline a scheme for a sample survey. The actual mathematical expression can only be given after a few pilot surveys have been carried out. It is time that the scheme for an economic census suggested by Bowley and Robertson was adopted, but modified in the light of experience gained in connection with crop surveys.

3.4. In the absence of any scientifically accurate information, I have had to use the data at present available. I have, however, tried to divest myself of the hallucinations of accuracy induced by the neatly printed columns and totals published under the authority of the Government of India. I have also come to feel that, in present circumstances, modesty about the reliability of one's estimates is not quite out of place.

## 4. *Current values*

4.1. Table 1 gives the estimates of consumer expenditure at current values, which include imputed values of non-market transactions. Notes to the Table (Appendix D) indicate specific sources, which could not be adequately discussed within the scope of a single paper.

4.2. The classification of items in each group mainly conforms to the analysis of wartime consumer expenditure available for the United Kingdom, the United States and Canada in *The Impact of the War on Civilian Consumption*, published by H.M. Stationery Office in 1945. Some changes were necessitated, however, by (*a*) inadequacy of data, (*b*) inclusion of items absent from the consumer expenditure in the West, and (*c*) what I believe to be more logical arrangements. (*a*) Consumers in India purchase cloth in the form in which it is obtained from mills or handloom weavers, and not as made-up garments as in the West. Dhotis, sarees, etc., do not need to be tailored, while the consumers arrange for the making up of the rest. Price data, thus relate to clothing material, and not to garments. I have, therefore, put the value of dress material into a separate group, and the estimated earnings of tailors are included in the Services group. On the other hand, on practical rather than logical grounds, paid or imputed value of the consumer "purchase" of services of the millers or housewives in processing the grains is included in the food group and not in the Services group. It is not possible to isolate expenditure on furnishing textiles from that on dress materials.† The values recorded under the dress materials and furnishing textiles group have a classification on the basis of the material used, instead of on the use of the products obtained. The group includes all textile products available for clothing, furnishings, household linen and floor coverings. Non-textile products (e.g. bamboo, thatch, etc.) used for these purposes and textile products (like coir ropes) not used for these purposes are included in the household goods group. The arrangement is admittedly unsatisfactory but was unavoidable. (*b*) Narcotic drugs provide an instance of items excluded from the shopping list of the consumers in the West. Expenditure on these keep company with expenditure on intoxicating liquors. Unlike the West, the services of "prostitutes and procurers" (census group

* The official term for guesses.

† We do not get any breakdown of handloom products or of "coloured dyed or printed" piece-goods produced in textile mills. Even for grey and bleached goods we do not get separate figures for items lumped together as "Trouser Cloth, Domestics and Sheetings."

CC-0. In Public Domain. Gurukul Kangri Collection, Haridwar

Digitized by Arya Samaj Foundation Chennai and eGangotri



TABLE 1 (cont.).—*Consumer Expenditure 1931–2 to 1940–1. Current Values (Rs. Million)*

| | 1931-2 | 1932-3 | 1933-4 | 1934-5 | 1935-6 | 1936-7 | 1937-8 | 1938-9 | 1939-40 | 1940-1 |
|---|---|---|---|---|---|---|---|---|---|---|
| 1. Food— | | | | | | | | | | |
| *a.* Cereals and pulses: | | | | | | | | | | |
| (1) Rice | 3,310 | 2,819 | 2,679 | 3,065 | 2,837 | 3,309 | 3,201 | 2,940 | 3,817 | 3,581 |
| (2) Wheat | 644 | 663 | 821 | 702 | 745 | 739 | 891 | 849 | 828 | 1,006 |
| (3) Jowar and bajra | 603 | 669 | 608 | 684 | 657 | 765 | 732 | 711 | 833 | 860 |
| (4) Gram and pulse | 568 | 535 | 517 | 560 | 515 | 611 | 579 | 585 | 650 | 678 |
| (5) Other | 640 | 678 | 625 | 647 | 684 | 671 | 665 | 619 | 754 | 792 |
| Total *a.* | 5,765 | 5,364 | 5,250 | 5,658 | 5,438 | 6,095 | 6,068 | 5,704 | 6,882 | 6,917 |
| *b.* Meat: | | | | | | | | | | |
| (6) Beef | 199 | 174 | 166 | 177 | 173 | 178 | 176 | 179 | 189 | 197 |
| (7) Mutton | 265 | 257 | 245 | 234 | 225 | 232 | 230 | 240 | 246 | 262 |
| (8) Poultry | 40 | 35 | 36 | 36 | 35 | 37 | 39 | 40 | 44 | 51 |
| (9) Other | 52 | 48 | 46 | 46 | 45 | 46 | 46 | 48 | 50 | 52 |
| Total *b.* | 556 | 514 | 493 | 493 | 478 | 493 | 491 | 507 | 529 | 562 |
| *c.* (10) Fish | 333 | 430 | 344 | 360 | 355 | 349 | 390 | 383 | 363 | 383 |
| *d.* Oils and fats: | | | | | | | | | | |
| (11) Butter | 32 | 34 | 29 | 30 | 30 | 29 | 30 | 31 | 32 | 30 |
| (12) Ghee | 1,401 | 1,216 | 973 | 1,021 | 1,021 | 943 | 982 | 972 | 1,001 | 1,109 |
| (13) Vegetable oils, etc. | 579 | 477 | 469 | 514 | 460 | 539 | 530 | 505 | 454 | 563 |
| Total *d.* | 2,012 | 1,727 | 1,471 | 1,565 | 1,511 | 1,511 | 1,542 | 1,508 | 1,487 | 1,702 |
| *e.* (14) Sugar | 721 | 781 | 796 | 888 | 834 | 713 | 950 | 1,267 | 821 | 751 |
| *f.* Dairy products: | | | | | | | | | | |
| (15) Milk and milk products ex. Butter and Ghee | 2,539 | 2,312 | 2,148 | 2,032 | 1,964 | 1,916 | 1,977 | 1,957 | 2,028 | 2,144 |
| (16) Eggs | 37 | 33 | 34 | 34 | 33 | 35 | 37 | 37 | 42 | 49 |
| Total *f.* | 2,576 | 2,345 | 2,182 | 2,066 | 1,997 | 1,951 | 2,014 | 1,994 | 2,070 | 2,193 |
| *g.* (17) Fruits and vegetables | 4,836 | 3,799 | 3,592 | 2,948 | 2,507 | 2,984 | 2,916 | 2,784 | 2,649 | 2,839 |
| *h.* Spices: | | | | | | | | | | |
| (18) Betelnuts | 120 | 122 | 111 | 108 | 102 | 120 | 124 | 143 | 139 | 143 |
| (19) Other | 1,647 | 1,411 | 1,384 | 1,100 | 1,346 | 1,315 | 1,177 | 1,056 | 1,072 | 1,215 |
| Total *h.* | 1,767 | 1,533 | 1,495 | 1,208 | 1,448 | 1,435 | 1,301 | 1,199 | 1,211 | 1,358 |
| *i.* (20) Salt | 151 | 140 | 152 | 142 | 150 | 157 | 155 | 150 | 169 | 170 |
| *j.* Non-alcoholic beverages: | | | | | | | | | | |
| (21) Tea | 53 | 47 | 45 | 52 | 54 | 52 | 58 | 61 | 51 | 59 |
| (22) Coffee, etc. | 29 | 24 | 20 | 21 | 20 | 24 | 21 | 15 | 22 | 24 |
| Total *j.* | 82 | 71 | 65 | 73 | 74 | 76 | 79 | 76 | 73 | 83 |
| *k.* Miscellaneous: | | | | | | | | | | |
| (23) Other provisions | 20 | 20 | 18 | 18 | 19 | 18 | 20 | 20 | 20 | 22 |
| (24) Ice and soft drinks | 17 | 17 | 16 | 18 | 20 | 22 | 24 | 24 | 25 | 26 |
| Total *k.* | 37 | 37 | 34 | 36 | 39 | 40 | 44 | 44 | 45 | 48 |
| Total food | 18,836 | 16,741 | 15,874 | 15,437 | 14,831 | 15,804 | 15,950 | 15,516 | 16,299 | 17,006 |

CC-0. In Public Domain. Gurukul Kangri Collection, Haridwar

Digitized by Arya Samaj Foundation Chennai and eGangotri



TABLE 1 (cont.).—*Consumer Expenditure*, 1931–2 *to* 1940–1. *Current Values*
(*Rs. Million*)

| | 1931-2 | 1932-3 | 1933-4 | 1934-5 | 1935-6 | 1936-7 | 1937-8 | 1938-9 | 1939-40 | 1940-1 |
|---|---|---|---|---|---|---|---|---|---|---|
| 2. Alcoholic drinks and narcotic drugs— | | | | | | | | | | |
| *a.* Alcoholic drinks: | | | | | | | | | | |
| (25) Country spirits and fermented liquors | 161 | 162 | 162 | 165 | 176 | 173 | 193 | 170 | 150 | 154 |
| (26) "Foreign" liquors | 71 | 62 | 60 | 60 | 63 | 65 | 64 | 65 | 62 | 69 |
| Total *a.* | 232 | 224 | 222 | 225 | 239 | 238 | 257 | 235 | 212 | 223 |
| *b.* Narcotic drugs: | | | | | | | | | | |
| (27) Opium | 30 | 28 | 26 | 26 | 25 | 26 | 24 | 24 | 23 | 25 |
| (28) Hemp drugs, etc. | 27 | 27 | 27 | 26 | 26 | 28 | 29 | 27 | 24 | 25 |
| Total *b.* | 57 | 55 | 53 | 52 | 51 | 54 | 53 | 51 | 47 | 50 |
| Total Alcoholic drinks and Narcotic drugs | 289 | 279 | 275 | 277 | 290 | 292 | 310 | 286 | 259 | 273 |
| 3. Tobacco— | | | | | | | | | | |
| (29) Cigarettes | 70 | 72 | 72 | 69 | 72 | 77 | 82 | 88 | 104 | 123 |
| (30) Cigars and cheroots | 246 | 235 | 217 | 188 | 179 | 188 | 198 | 188 | 207 | 271 |
| (31) Bidis | 141 | 141 | 141 | 141 | 141 | 141 | 141 | 141 | 164 | 188 |
| (32) Other products | 670 | 609 | 603 | 509 | 670 | 593 | 553 | 786 | 703 | 688 |
| Total Tobacco | 1,127 | 1,057 | 1,033 | 907 | 1,062 | 999 | 974 | 1,203 | 1,178 | 1,270 |
| 4. Dress materials and furnishing textiles— | | | | | | | | | | |
| (33) Cotton | 1,595 | 1,686 | 1,554 | 1,678 | 1,654 | 1,696 | 1,812 | 1,904 | 2,056 | 2,023 |
| (34) Silk | 135 | 132 | 127 | 113 | 103 | 133 | 96 | 138 | 86 | 162 |
| (35) Rayon | 127 | 142 | 124 | 105 | 139 | 134 | 182 | 231 | 142 | 299 |
| (36) Woollen | 111 | 130 | 124 | 101 | 96 | 93 | 120 | 120 | 114 | 89 |
| (37) "Mixtures" | 42 | 21 | 16 | 36 | 38 | 46 | 88 | 64 | 77 | 127 |
| (38) Coir, hair, etc. | 26 | 24 | 16 | 19 | 16 | 19 | 25 | 19 | 6 | 29 |
| Total Textiles | 2,036 | 2,135 | 1,961 | 2,052 | 2,046 | 2,121 | 2,323 | 2,476 | 2,481 | 2,729 |
| 5. (39) Footwear | 203 | 202 | 173 | 132 | 125 | 135 | 162 | 168 | 213 | 334 |
| 6. Housing— | | | | | | | | | | |
| (40) Rent | 1,281 | 1,265 | 1,306 | 1,335 | 1,315 | 1,312 | 1,327 | 1,355 | 1,392 | 1,422 |
| (41) Rates | 192 | 192 | 197 | 204 | 199 | 200 | 203 | 206 | 209 | 214 |
| Total Housing | 1,473 | 1,457 | 1,503 | 1,539 | 1,514 | 1,512 | 1,530 | 1,561 | 1,601 | 1,636 |
| 7. Fuel, light and power— | | | | | | | | | | |
| (42) Dungcakes | 90 | 90 | 90 | 90 | 90 | 90 | 90 | 90 | 90 | 90 |
| (43) Firewood and charcoal | 196 | 185 | 186 | 190 | 191 | 184 | 201 | 194 | 185 | 208 |
| (44) Kerosene | 197 | 163 | 149 | 166 | 150 | 157 | 188 | 178 | 187 | 211 |
| (45) Electricity | 37 | 38 | 38 | 37 | 38 | 41 | 45 | 48 | 52 | 56 |
| (46) Oils, gas, etc. | 31 | 32 | 36 | 35 | 34 | 37 | 44 | 38 | 42 | 37 |
| Total Fuel, light and power | 551 | 508 | 499 | 518 | 503 | 509 | 568 | 548 | 556 | 602 |
| 8. Household goods— | | | | | | | | | | |
| *a.* Furniture: | | | | | | | | | | |
| (47) Furniture | 101 | 108 | 104 | 110 | 118 | 113 | 131 | 133 | 139 | 152 |
| (48) Musical instruments | 23 | 21 | 23 | 27 | 29 | 30 | 32 | 30 | 31 | 34 |
| (49) Art works | 5 | 5 | 5 | 5 | 5 | 5 | 5 | 5 | 5 | 5 |
| Total *a.* | 129 | 134 | 132 | 142 | 152 | 148 | 168 | 168 | 175 | 191 |

CC-0. In Public Domain. Gurukul Kangri Collection, Haridwar

Digitized by Arya Samaj Foundation Chennai and eGangotri



TABLE 1 (cont.).—*Consumer Expenditure, 1931–2 to 1940–1. Current Values*
(*Rs. Million*)

| | 1931-2 | 1932-3 | 1933-4 | 1934-5 | 1935-6 | 1936-7 | 1937-8 | 1938-9 | 1939-40 | 1940-1 |
|---|---|---|---|---|---|---|---|---|---|---|
| *b.* Hardware: | | | | | | | | | | |
| (50) Crockery, earthenware and glassware | 92 | 96 | 96 | 98 | 100 | 102 | 107 | 107 | 109 | 111 |
| (51) Utensils, cutlery and hardware | 131 | 110 | 143 | 124 | 157 | 157 | 125 | 128 | 136 | 151 |
| (52) Electric bulbs, lanterns and lamps | 12 | 15 | 14 | 17 | 18 | 16 | 20 | 17 | 17 | 17 |
| (53) Electrical goods | 4 | 4 | 5 | 6 | 7 | 8 | 8 | 7 | 8 | 7 |
| (54) Sewing machines | 9 | 8 | 8 | 14 | 12 | 9 | 14 | 10 | 13 | 8 |
| Total *b.* | 248 | 233 | 266 | 259 | 294 | 292 | 266 | 269 | 283 | 294 |
| *c.* Other household goods: | | | | | | | | | | |
| (55) Matches | 18 | 18 | 18 | 42 | 52 | 53 | 56 | 55 | 57 | 70 |
| (56) Soap and washing soda | 41 | 42 | 41 | 43 | 42 | 43 | 57 | 72 | 68 | 90 |
| (57) Bamboo products | 104 | 110 | 97 | 104 | 94 | 90 | 104 | 97 | 100 | 105 |
| (58) Other | 13 | 13 | 13 | 13 | 14 | 15 | 18 | 16 | 18 | 15 |
| Total *c.* | 176 | 183 | 169 | 202 | 202 | 201 | 235 | 240 | 243 | 280 |
| Total Household goods | 553 | 550 | 567 | 603 | 648 | 641 | 669 | 677 | 701 | 765 |
| 9. (59) Personal effects | 197 | 208 | 210 | 202 | 222 | 224 | 246 | 241 | 248 | 244 |
| 10. (60) Amusements | 53 | 53 | 58 | 58 | 69 | 73 | 80 | 81 | 97 | 101 |
| 11. (61) Reading matter | 101 | 98 | 105 | 120 | 125 | 122 | 125 | 150 | 156 | 168 |
| 12. (62) Private transport | 130 | 130 | 143 | 166 | 172 | 181 | 182 | 164 | 182 | 185 |
| 13. Public transport— | | | | | | | | | | |
| (63) Long distance | 301 | 302 | 291 | 293 | 295 | 292 | 310 | 307 | 305 | 327 |
| (64) Local and suburban | 89 | 88 | 93 | 97 | 98 | 98 | 103 | 102 | 99 | 109 |
| Total Public transport | 390 | 390 | 384 | 390 | 393 | 390 | 413 | 409 | 404 | 436 |
| 14. Communications— | | | | | | | | | | |
| (65) Letters and parcels | 40 | 41 | 41 | 42 | 44 | 44 | 47 | 47 | 47 | 48 |
| (66) Telegrams | 16 | 15 | 16 | 16 | 16 | 16 | 16 | 15 | 18 | 20 |
| (67) Telephones | 2 | 3 | 3 | 3 | 3 | 3 | 4 | 4 | 4 | 5 |
| Total Communications | 58 | 59 | 60 | 61 | 63 | 63 | 67 | 66 | 69 | 73 |
| 15. Services— | | | | | | | | | | |
| *a.* (68) Medicine | 177 | 179 | 179 | 190 | 200 | 208 | 210 | 218 | 216 | 228 |
| *b.* (69) Education | 226 | 223 | 221 | 230 | 240 | 247 | 271 | 275 | 297 | 317 |
| *c.* (70) Food | 76 | 78 | 79 | 81 | 82 | 84 | 85 | 87 | 88 | 90 |
| *d.* Dress and toilet: | | | | | | | | | | |
| (71) Tailoring | 110 | 124 | 116 | 125 | 131 | 138 | 147 | 156 | 163 | 165 |
| (72) Laundry | 141 | 160 | 150 | 161 | 168 | 178 | 189 | 201 | 209 | 212 |
| (73) Barbers | 158 | 157 | 160 | 161 | 168 | 176 | 180 | 180 | 187 | 201 |
| (74) Jewellers | 276 | 271 | 262 | 249 | 262 | 276 | 290 | 276 | 304 | 331 |
| Total *d.* | 685 | 712 | 688 | 696 | 729 | 768 | 806 | 813 | 863 | 909 |

CC-0. In Public Domain. Gurukul Kangri Collection, Haridwar

Digitized by Arya Samaj Foundation Chennai and eGangotri



TABLE I (cont.).—*Consumer Expenditure 1931–2 to 1940–1. Current Values*
(*Rs. Million*)

| | 1931-2 | 1932-3 | 1933-4 | 1934-5 | 1935-6 | 1936-7 | 1937-8 | 1938-9 | 1939-40 | 1940-1 |
|---|---|---|---|---|---|---|---|---|---|---|
| *e.* (75) Religion . . | 268 | 254 | 239 | 218 | 222 | 221 | 213 | 209 | 224 | 233 |
| *f.* (76) Domestic . . | 553 | 525 | 486 | 442 | 475 | 448 | 437 | 464 | 481 | 525 |
| *g.* (77) Manual labour. | 20 | 19 | 18 | 16 | 17 | 16 | 15 | 15 | 16 | 17 |
| *h.* (78) Prostitutes . | 32 | 33 | 34 | 35 | 36 | 37 | 38 | 39 | 42 | 45 |
| *i.* (79) Miscellaneous . | 54 | 57 | 60 | 64 | 71 | 76 | 82 | 86 | 90 | 98 |
| Total Services . | 2,091 | 2,080 | 2,004 | 1,972 | 2,072 | 2,105 | 2,157 | 2,206 | 2,317 | 2,462 |
| Grand Total . | 28,088 | 25,947 | 24,849 | 24,434 | 24,135 | 25,171 | 25,756 | 25,852 | 26,761 | 28,284 |
| (80) Population (000,000) | 340·5 | 345·3 | 350·2 | 355·1 | 360·2 | 365·3 | 370·4 | 375·7 | 381·0 | 386·3 |
| Expenditure per capita (Rs.) . . . | 82·5 | 75·1 | 71·0 | 68·8 | 67·0 | 68·9 | 69·5 | 68·8 | 70·2 | 73·2 |

194) are included in the estimates, on the ground that prostitution is not illegal in India.* (*c*) In the estimates of consumer expenditure in the United Kingdom and the United States available in the publication mentioned above, clocks and watches appear in the personal effects group. I have chosen to include clocks in Item 47 in the household goods group. Watches, of course, are left in the personal effects group. I also consider it more logical to include money order and postal order receipts of the post offices in Item 79 in the services group together with legal expenses on transfer of property on consumer account, and not in the communications group. Except for these minor changes I have attempted to preserve as much of comparative value as possible.†

### 5. *Imputed values*

5.1. Imputed values, as set out in Table 2, besides including the value of (*a*) village retention of commodities, (*b*) services of housewives in the cleaning and processing of grains, and (*c*) the rental value of owner-occupied residential property, also include an addition of Rs. 100 millions to take into account all other non-market values which could not be separately ascertained. Of these Rs. 50 millions are allocated to the food group. Since in all these cases money transactions did not take place we cannot have any basis for valuation, and the imputed values are all arbitrary. The table is given in order to suggest an approximate magnitude of the non-market sector in the total consumer expenditure. This works out at 16 per cent. of the total in 1938–9.‡

TABLE 2.—*Consumer Expenditure, 1938–9. Imputed Values*
(*Rs. Million*)

| 1. Food— | *Village Retention* | *Housewives' Services* | *Owner-occupied Houses* | *Unspecified* | *Total* |
|---|---|---|---|---|---|
| *a.* Cereals and pulses: | | | | | |
| Rice . . . . . | 1,282 | — | — | — | 1,282 |
| Wheat . . . . . | 270 | 26 | — | — | 296 |
| Jowar and bajra . . . . | 461 | 65 | — | — | 526 |
| Gram and pulse . . . . | 166 | 4 | — | — | 170 |
| Other . . . . . | 351 | 47 | — | — | 398 |
| Total *a.* . . . . . | 2,530 | 142 | — | — | 2,672 |

* The Census classifies the occupation as "unproductive." I share a view that in practical works of this type we may better confine our judgments on social morality only to those embodied in the legal system.

† In the recent (revised) estimates for the United States available in the National Income supplement to *Survey of Current Business* (July, 1947) consumer expenditure is given a detailed reclassification, which among many desirable changes rectifies the errors mentioned above. Since the estimates for the United Kingdom are not available in corresponding detail, I have adhered to the classification given in *The Impact of the War on Civilian Consumption*.

‡ In "commodity" terms it would be higher as the imputed money value of retention excludes mark ups on account of distributive costs.

CC-0. In Public Domain. Gurukul Kangri Collection, Haridwar

Digitized by Arya Samaj Foundation Chennai and eGangotri



TABLE 2.—(cont.). *Consumer Expenditure*, 1938–9. *Imputed Values*
(*Rs. Million*)

| | *Village Retention* | *House-wives Services* | *Owner-occupied Houses* | *Unspecified* | *Total* |
|---|---|---|---|---|---|
| *b.* Meat: | | | | | |
| Poultry | 13 | — | — | — | 13 |
| Other | 5 | — | — | — | 5 |
| Total *b.* | 18 | — | — | — | 18 |
| *c.* Fish | 12 | — | — | — | 12 |
| *d.* Oils and fats: | | | | | |
| Butter and ghee | 100 | — | — | — | 100 |
| Oils, etc. | 9 | — | — | — | 9 |
| Total | 109 | — | — | — | 109 |
| *e.* Sugar | 96 | — | — | — | 96 |
| *f.* Dairy products: | | | | | |
| Milk and milk products ex. butter and ghee | 315 | — | — | — | 315 |
| Eggs | 6 | — | — | — | 6 |
| Total *f.* | 321 | — | — | — | 321 |
| *g.* Fruits and vegetables | 278 | — | — | — | 278 |
| *h.* Spices: | | | | | |
| Betelnuts | 6 | — | — | — | 6 |
| Other | 40 | — | — | — | 40 |
| Total *h.* | 46 | — | — | — | 46 |
| *i.* Other items | — | — | — | 50 | 50 |
| Total food | 3,410 | 142 | — | 50 | 3,602 |
| 2. Tobacco | 27 | — | — | — | 27 |
| 3. Rent | — | — | 396 | — | 396 |
| 4 Fuel—dungcakes | 90 | — | — | — | 90 |
| 5. Other groups. | — | — | — | 50 | 50 |
| Grand total | 3,527 | 142 | 396 | 100 | 4,165 |

5.2. "Village retention" consists of (*a*) retention of commodities by the producers for their own consumption, and (*b*) payments in kind made to field labourers and village craftsmen such as carpenters and blacksmiths for their agricultural services, and to teachers, barbers, preachers and others for their professional services.* In the case of (*a*) we value the quantities at the "net" realized prices for the supplies actually sold, as that is the only concrete basis on which statistical data can be obtained. This involves two assumptions : (i) that retention was a choice, i.e. the producers would have bought the quantities if they had not retained them; hence they

* Not necessarily confined to villages only. The concept is generally used with reference to crops, and hence the term "village retention." For the purposes of this essay, however, the term is used to denote all non-market transactions in commodities (excluding houses).

CC-0. In Public Domain. Gurukul Kangri Collection, Haridwar

Digitized by Arya Samaj Foundation Chennai and eGangotri



should be treated as the purchase by the producers in their capacity as consumers of their own produce, and (ii) that this purchase is effected at the ruling prices (net of selling costs) in the market, implying thereby that these are the prices they would have realized per unit if they had chosen to sell the out-turn instead. We are here assuming an optimum distribution of supplies, with the ruling prices "net" of selling costs equating "utilities" at the margin.*

5.3. Occasionally peculiar situations arise, e.g. in the case of sugar cane. Whatever quantities the sugar factories require are sold to them at a price controlled by the Government. Of the rest a part is directly consumed by the producers, and a part converted to gur,† again by the producers themselves. The only available price data relate to sugar cane purchased by factories. We find, however, that the price of gur is lower than the value of equivalent quantities of sugar cane if these have been purchased by sugar factories. Even if we knew the price at which sugar cane could be sold for gur production (and we do not), what is the value of producers' own consumption? Is it between or below the price paid by factories and the price paid by gur manufacturers? It may be below both, if we assume these quantities could neither be sold to factories nor to gur producers. It may be in between if we assume that the producers consumed all they could, and sold the rest at "scrap" prices to gur producers, or produced gur themselves. The same happens with perishable commodities. Thus fluid milk fetches a higher price per pound than a pound devoted to the production of ghee‡ and other by-products. Where are we to place the personal consumption of the milk producer? These are logical issues for which we have no satisfactory answers. Personal acquaintance with, and judgment on, an individual instance may be responsible for whatever adjustments are made to the available data on the prices of actual sales. To this extent these should be considered arbitrary and involving a bias.

5.4. As regards payments in kind, the choice was to value these quantities at their "cost" to the producer or the "income" to the recipient, the latter measured in terms of what the recipient would have had to pay if he bought the supply on the market instead of receiving it as a wage. The difference between the two is the distributive spread between the prices at the two ends, the prices at which the producer sells (or it is assumed that he can sell) his produce, and the prices at which the retailer is presumed to sell it in the same village. I have chosen to value it at the (supposed) cost to the producer, primarily because wage payments in kind are predominant in surplus-producing villages, where there is practically no retail market.

5.5. Apart from the problems of valuation, the estimation of quantities retained is also unsatisfactory. While there is no dearth of publications giving the annual out-turn of a crop, we know next to nothing of what happens once the crop is harvested. The only source of information is the series of Marketing Reports, which at their best give only percentages (of production) to account for retention and subsequent utilization of the supplies retained or marketed. These percentages are based on traditional "inquiries" of little scientific value.

5.6. One could have expected a better performance from the Department of Food which came into being to meet the wartime problems of food administration. The Department was called upon to procure all the supplies that were offered for sale on the market. It could have evolved a scientific technique of estimating quantities on which it could lay hands. But the procedure of the Department's work, so far as could be gathered, has been random guesswork. I persistently tackled anyone who could be persuaded to talk about any methods the Department had evolved to ascertain the quantities of supplies they could procure, and the allowances for seed, personal consumption, etc., they made. But it appears (and I hope I may be officially corrected) that all the Department has done is to rest content with a standard figure of 60 per cent., which for the purposes of a food budget is assumed as not available for purchase on the market. I was surprised at the number of officials, in other Departments as well, and in the Provinces, who

* As we assume an optimum distribution of supplies, we deduct imputed values of market charges borne by the producer, and the transport charges to the town market, since these are "saved" in the case of supplies retained by him. I am, however, not sure of the "saving" of costs in the latter instance. The bullocks have to be fed anyway, the cart would otherwise be idle, and the man himself would be suffering inevitable unemployment. On non-economic considerations it would be better for him to be on the road than in his dingy hut in the village. All evidence seems to show that when a cultivator owns a cart and a pair of bullocks, he almost invariably takes his produce to the town market.

† Cane juice boiled to semi-liquid or solid consistency, which may be roughly described as unrefined brown sugar.

‡ Clarified butter.

CC-0. In Public Domain. Gurukul Kangri Collection, Haridwar

Digitized by Arya Samaj Foundation Chennai and eGangotri



hit upon 60 as the percentage accounted for by village retention. Questioned on the reasons for the adoption of this figure, none had any scientific basis to offer.*

5.7. For what it was worth, such information as was available in the Marketing Reports was used for the purpose. A problem (not confined to questions of retention) that has haunted the entire work and for which a solution has hardly been discovered is how best to use this type of general percentage information (undated or dated for one particular year) for constructing a proper time series. In this instance there could be three possibilities : (i) that retention remained the same in quantity for all the ten years, (ii) that it remained the same as a proportion of production, and (iii) that it neither remained the same in quantity nor proportion. The last, obviously, is the most probable situation. But there was no information by which a relationship could be established between prices and retention, or between any of the various factors relevant to the problem in hand. It is not even possible on purely *à priori* grounds to postulate that the normal laws of supply apply to agricultural output. A fall in output or a fall in prices may so impoverish the farmers that they are "induced" (to borrow a Marshallian phrase) to part with more grains in order to obtain necessities like clothes, sugar, salt, matches, kerosene, etc. Or a rise in prices or output may make them content with their sales, and may increase their own demand for food. Thus, apart from working out quantitative results, we do not even know the direction in which to find answers to our problems. Having no wheel to steer by, I have chosen the middle course, that with the increase in out-turn, part of the quantity so increased would be available for sale on the market. This is satisfied by our assumption (ii) that the proportion of the produce retained remained the same. Since this observation has no independent significance, imputed values in the Table are given only for one year.

## 6. *Reliability*

6.1. Right from the inception of the work I have persevered with the idea of following Bowley's precept of keeping a running account of error. This reliability assessment has meant two operations : (*a*) ascertaining the error in each factor, and (*b*) evaluating the incidence of these errors in one or more of the factors on their total function.

6.2. In respect of (*a*) two sorts of errors were involved : (i) errors which could be calculated by what may be described as purely technical operations such as calculations of standard errors, etc. These were available only for a few items, agricultural prices for instance, where averages from sufficiently large samples were obtained. (ii) Most of the errors one comes across in national income estimates, however, are indefinite, and are generally the products of subjective assumptions indicative of the nature of the data rather than any precise knowledge of their error magnitude. Thus we may consider that the data at our disposal are not sufficiently exhaustive, or that they contain a bias. Alternatively, we feel that while our data may not warrant an unconditional acceptance of their reliability, we are not able to detect a bias. In all these instances where estimates of errors tend to be subjective, it may be considered unwise to give any quantitative precision to such errors. The purpose of giving these errors, that of indicating the inaccuracies in the data, would be well served by following a broad classification as adopted, for instance, in the Irish White Paper on National Income and Expenditure, 1938–1944 (pp. 21–5). Here four indices of the nature of the data are adopted:

A. . . . Firm figures,
B. . . . Good estimates,
C. . . . Rough estimates,
D. . . . Conjectures.

For data which require adjustment for bias or coverage the available information may be assigned to one of the three categories A to C, and the arbitrary adjustments to D. Thus, incomes

* The Government have now realized the importance of scientific methods for estimating the out-turn of crops. Equally important is an integral investigation into all other aspects of the economic life of the village, and particularly into "village retention" and the factors affecting it. This is specially so when the Government are called upon to have a positive food policy to avoid famine, and a positive monetary policy to avert a depression. In India the impact of a depression is transmitted to the system through a fall in agricultural incomes. And the two significant factors affecting the money incomes of the agriculturists are the quantities of and the prices at which they part with their crops.

CC-0. In Public Domain. Gurukul Kangri Collection, Haridwar

Digitized by Arya Samaj Foundation Chennai and eGangotri



assessed to income-tax may be put into Category A, while the correction for the underestimation may be relegated to Category D. Where there is no suspicion of bias the nature of the data may be roughly assessed and any of the categories thought fit may be adopted. In the present estimates there are no "firm figures." Most of the values are products of quantities and average prices, and these cannot have an accuracy comparable to censal data. I have adopted the same symbols, but these stand for

A. . . . Good estimates,
B. . . . Fair estimates,
C. . . . Rough estimates,
D. . . . . Conjectures.

6.3. So far we may trust the statistician of national income to be objective. But there is still the problem (*b*), that of the propagation of errors. Each item in our consumer expenditure is a function of its constituent factors, and the total in turn is a summation of the values of various items. The following formulation of the general equations of the propagation of errors is fairly simple.*

If $F$ is a function of $x$, $y$, $z$ with standard errors $\sigma_x$, $\sigma_y$, $\sigma_z$ respectively and if we introduce $r_{xy}$ as a correlation coefficient between $\sigma_x$ and $\sigma_y$, etc., neglecting the higher terms we get

$$\sigma_F^2 = (F_x\sigma_x)^2 + (F_y\sigma_y)^2 + (F_z\sigma_z)^2 + 2(F_xF_y\sigma_x\sigma_y r_{xy} + F_yF_z\sigma_y\sigma_z r_{yz} + F_xF_z\sigma_x\sigma_z r_{xz}), \text{ where } F_x = \frac{\partial F}{\partial x} \text{ etc.} \quad . \quad . \quad . \quad . \quad (1)$$

$$\text{If } F = x + y + z, \qquad F_x = F_y = F_z = 1 \quad . \quad . \quad . \quad . \quad (2)$$

It follows

$$\sigma_F^2 = \sigma_x^2 + \sigma_y^2 + \sigma_z^2 + 2(r_{xy}\sigma_x\sigma_y + r_{yz}\sigma_y\sigma_z + r_{xz}\sigma_x\sigma_z). \quad . \quad . \quad . \quad (3)$$

The terms in the parenthesis are zero if the errors in the variables $x$ and $y$, etc., are independent. Thus,

$$\text{If } r_{xy}, \text{ etc., } = 0, \qquad \sigma_F^2 = \sigma_x^2 + \sigma_y^2 + \sigma_z^2. \quad . \quad . \quad . \quad (4)$$

Alternatively let the errors in the variables be perfectly positively or negatively correlated.

$$\text{If } r_{xy} \text{ etc. } = 1, \qquad \sigma_F = \sigma_x + \sigma_y + \sigma_z \quad . \quad . \quad . \quad . \quad (5)$$

$$\text{If } r_{xy} = -1 \text{ and } r_{xz} = -1, \qquad r_{yz} = 1 \quad . \quad . \quad . \quad . \quad (6)$$

It then follows

$$\sigma_F = \sigma_x - \sigma_y - \sigma_z \quad . \quad . \quad . \quad . \quad . \quad . \quad (7)$$

$$\text{If } F = xyz,\ F_x = yz,\ F_y = xz,\ F_z = xy \quad . \quad . \quad . \quad . \quad (8)$$

The mean square error corresponding to equation (1) would be

$$\sigma_F^2 = (yz\sigma_x)^2 + (xz\sigma_y)^2 + (xy\sigma_z)^2 + 2(r_{xy}z^2xy\sigma_x\sigma_y + r_{yz}x^2yz\sigma_y\sigma_z + r_{xz}y^2xz\sigma_x\sigma_z) \quad . \quad . \quad . \quad . \quad . \quad . \quad (9)$$

Equation (9) holds good for any value of $r_{xy}$, etc.

$$\text{If } r_{xy}, \text{ etc., } = 0, \ \sigma_F^2 = (yz\sigma_x)^2 + (xz\sigma_y)^2 + (xy\sigma_z)^2 \quad . \quad . \quad . \quad (10)$$

Simplifying equation (10) we get

$$(\sigma_F/F)^2 = (\sigma_x/x)^2 + (\sigma_y/y)^2 + (\sigma_z/z)^2 \quad . \quad . \quad . \quad . \quad (11)$$

Thus, on the assumption of independence of errors in the variables, the squares of the percentage or relative mean square errors are additive. If the percentage errors are perfectly correlated these would be simply additive, i.e.,

$$\sigma_F/F = \sigma_x/x + \sigma_y/y + \sigma_z/z \quad . \quad . \quad . \quad . \quad . \quad (12)$$

6.4. The above equations of error are applicable on the assumptions: (*a*) that the variables $x$, $y$, $z$, etc., are stochastic, and (*b*) that we know the precise values of the coefficients of correlation

* See W. Edwards Deming : *Statistical Adjustment of Data*, particularly Chapter Three.

CC-0. In Public Domain. Gurukul Kangri Collection, Haridwar

Digitized by Arya Samaj Foundation Chennai and eGangotri



$r_{xy}$, etc., between the errors. In practical work of this kind neither of these conditions is satisfied by the data, and we therefore require to make two corresponding arbitrary assumptions before we can bring the algebra into operation. (*a*) In Table 3 I have classified estimates of all the items for the year 1938–9 into the four reliability categories and have imputed to these the following values of mean error per cent:*

| | |
|---|---|
| A. . . . . | 3 |
| B. . . . . | 10 |
| C. . . . . | 20 |
| D. . . . . | 50 |

These arbitrary mean values are applied uniformly to each individual item and its constituent factors. So far as any particular item is concerned, the error assignment has little quantitative significance beyond the classification into reliability categories.† (*b*) Not only the imputation of errors to the variables, but their ensemble also involves the operation of the subjective element to a significant degree. The only mitigating factor in the case of consumer expenditure estimates is that they are prepared from an intensive breakdown of each individual item, and the errors are likely to be more independent than in the case of purely income estimates where values are obtained in large blocs from single sources. If in Table 3 all the errors were perfectly positively correlated, the error of the global total would be 22 per cent. Alternatively, if all errors taken to the smallest sub-group were assumed independent, the error in the total would add up to less than 3 per cent. Neither of these assumptions is justifiable, and the two only set the limits. I have adopted a modified approach. Where there was any reason to believe the correlations in the errors concerned were nearer to 1 than 0 (e.g. when estimates were obtained from the same sources, etc.) these errors were taken to be perfectly correlated. Thus the factor constituents of each item, and also individual items in the sub-groups of the food group, were assumed all to be perfectly correlated, and were simply added up. On the other hand, estimates which were obtained from independent sources were treated as independent, even though they might possibly involve a small correlation. In the table, errors marked with one asterisk are obtained on the assumption of independence of the sub-groups constituting the total. Error in the tobacco group (marked with two asterisks) is obtained on the assumption of a perfect negative correlation between (i) cigars and cheroots, cigarettes and bidis all with a perfect positive correlation and (ii) other tobacco products obtained as a residual. The global total obtains its error, Rs. 1,856 millions or 7·2 per cent. (marked with three asterisks), on an assumption of independence between the Group errors. For a mean error, I feel this is an overestimate, and an error of about 5 per cent. is more probable.

6.5. The data are inadequate for earlier years of the decade and for 1940–1 as some of the publications giving information for the year still await publication. The errors for these years should be reckoned higher.

## 7. *Group distribution of total expenditure*

7.1. Quantitative precision in international comparisons of absolute levels is generally misleading. So far as the broad disparity is concerned it is obvious, for instance, that the average Indian is poorer than the average Englishman, and one need not labour to give national income figures to prove it. A more instructive way, I believe, is to study the distribution of expenditure

* It is possible that our classification into categories is the outcome of our feelings about the "outside" limits of errors. To ascertain the relations of these maxima to the mean errors adopted for the propagation of errors would involve an additional arbitrary assumption about the error curve.

† I am particularly unhappy about imputing any precise error value to conjectures. While a high value of 50 per cent. is given to their mean error, no positive value can be assigned to their maximum error. While it is not possible to get rid of the conjectural element in national income estimates, an assignment of maximum error, at times, may only mislead. Thus, for instance, after ascertaining the per capita consumption of fluid milk in urban areas, Rao, in his estimate of the national income of British India, 1931–2, observes (p. 94) that the per capita urban consumption of milk products would have a milk equivalent of 50 per cent. of the consumption of fluid milk. The data collected at about the same time (1935) from 23 cities by the Marketing Adviser to the Government of India gave it at 240 per cent. of the consumption of fluid milk. (Daily per capita consumption—fluid milk 3·7 oz. and the milk equivalent of milk products 8·9 oz.). The maximum error assigned by Rao is 20 per cent.

CC-0. In Public Domain. Gurukul Kangri Collection, Haridwar

Digitized by Arya Samaj Foundation Chennai and eGangotri



to see what proportions of his small income the average Indian spends on necessities, particularly food, compared with the Englishman or the American. The self-explanatory Table 4 gives the group distribution of consumer expenditure for the last pre-war year in India, and in the United Kingdom and the United States.

TABLE 3.—*Consumer expenditure*, 1938–9. *Reliability*
(*Rs. Million*)

| | *A* | *B* | *C* | *D* | *Total* | *Error* | *Error %* |
|---|---|---|---|---|---|---|---|
| 1. Food— | | | | | | | |
| *a.* Cereals and pulses: | | | | | | | |
| Rice | 2,494 | 143 | 35 | 268 | 2,940 | | |
| Wheat | 698 | 81 | 16 | 54 | 849 | | |
| Jowar and bajra | 613 | 64 | — | 34 | 711 | | |
| Gram and pulse | 235 | 241 | 15 | 94 | 585 | | |
| Other | 105 | 418 | 47 | 49 | 619 | | |
| Total *a.* | 4,145 | 947 | 113 | 499 | 5,704 | 491·15 | |
| *b.* Meat: | | | | | | | |
| Beef | — | — | 179 | — | 179 | | |
| Mutton | — | — | 240 | — | 240 | | |
| Poultry | — | — | 40 | — | 40 | | |
| Other | — | — | — | 48 | 48 | | |
| Total *b.* | — | — | 459 | 48 | 507 | 115·8 | |
| *c.* Fish | 1 | — | — | 382 | 383 | 191·03 | |
| *d.* Milk products | 7 | 1,010 | 1,943 | — | 2,960 | 489·81 | |
| *e.* Vegetable oils | — | 290 | 201 | 14 | 505 | 76·2 | |
| *f.* Eggs | — | — | 37 | — | 37 | 7·4 | |
| *g.* Sugar | 462 | 790 | — | 15 | 1,267 | 100·36 | |
| *h.* Fruits and vegetables | — | 114 | 182 | 2,488 | 2,784 | 1,291·8 | |
| *i.* Spices: | | | | | | | |
| Betelnuts | 39 | — | — | 104 | 143 | 53·17 | |
| Other | 3 | — | — | 1,053 | 1,056 | 526·59 | |
| Total *i.* | 42 | — | — | 1,157 | 1,199 | | |
| *j.* Salt, etc. | 149 | 1 | — | — | 150 | 4·57 | |
| *k.* Non-alcoholic beverages: | | | | | | | |
| Tea | 61 | — | — | — | 61 | 1·83 | |
| Coffee | — | 15 | — | — | 15 | 1·5 | |
| Total *k.* | 61 | 15 | — | — | 76 | | |
| *l.* Miscellaneous: | | | | | | | |
| Other provisions | 10 | — | — | 10 | 20 | 5·3 | |
| Ice and aerated waters | — | — | — | 24 | 24 | 12·0 | |
| Total *l.* | 10 | — | — | 34 | 44 | | |
| Total Food | 4,877 | 3,167 | 2,935 | 4,637 | 15,616 | 1,574·44* | 10.03 |
| 2. Alcoholic drinks and Narcotic drugs— | | | | | | | |
| *a.* Alcoholic drinks: | | | | | | | |
| country spirits and fermented liquors | 83 | — | 46 | 41 | 170 | | |
| "Foreign" liquors | 47 | 4 | — | 14 | 65 | | |
| Total *a.* | 130 | 4 | 46 | 55 | 235 | 41·0 | |

CC-0. In Public Domain. Gurukul Kangri Collection, Haridwar

Digitized by Arya Samaj Foundation Chennai and eGangotri



TABLE 3 (cont:).—*Consumer expenditure, 1938–9. Reliability*
(*Rs. Million*)

| | *A* | *B* | *C* | *D* | *Total* | *Error* | *Error %* |
|---|---|---|---|---|---|---|---|
| *b.* Narcotic drugs: | | | | | | | |
| Opium | 24 | — | — | — | 24 | | |
| Hemp drugs, etc. | — | — | 27 | — | 27 | | |
| Total *b.* | 24 | — | 27 | — | 51 | 6·12 | |
| Total Alcoholic drinks and Narcotic drugs | 154 | 4 | 73 | 55 | 286 | 41·45* | 14·49 |
| 3. Tobacco— | | | | | | | |
| Cigarettes | 12 | — | 76 | — | 88 | | |
| Cigars and cheroots | 1 | — | 187 | — | 188 | | |
| Bidis | — | — | 141 | — | 141 | | |
| Other products | 3 | — | 783 | — | 786 | | |
| Total Tobacco | 16 | — | 1,187 | — | 1,203 | 75·5** | 6·28 |
| 4. Dress materials and furnishing textiles— | | | | | | | |
| Cotton | 675 | 1,137 | 69 | 23 | 1,904 | 159·25 | |
| Silk | 12 | 121 | — | 5 | 138 | 14·96 | |
| Rayon | 13 | 218 | — | — | 231 | 22·19 | |
| Wool | 15 | — | 105 | — | 120 | 21·45 | |
| "Mixtures" | — | 64 | — | — | 64 | 6·4 | |
| Coir, hair, etc. | — | 15 | — | 4 | 19 | 3·5 | |
| Total Dress materials and furnishing textiles | 715 | 1,555 | 174 | 32 | 2,476 | 163·06* | 6·59 |
| 5. Footwear | — | 9 | 159 | — | 168 | 32·7 | 19·46 |
| 6. Housing— | | | | | | | |
| Rent | 895 | — | — | 460 | 1,355 | | |
| Rates | 192 | — | — | 14 | 206 | | |
| Total Housing | 1,087 | — | — | 474 | 1,561 | 269·61 | 17·27 |
| 7. Fuel, light and power— | | | | | | | |
| Dungcakes | — | — | — | 90 | 90 | 45·0 | |
| Firewood | — | — | 194 | — | 194 | 38·8 | |
| Kerosene | 178 | — | — | — | 178 | 5·34 | |
| Electricity | 48 | — | — | — | 48 | 1·44 | |
| Oils, etc. | — | — | 38 | — | 38 | 7·6 | |
| Total Fuel, light and power | 226 | — | 232 | 90 | 548 | 60·16* | 10·97 |
| 8. Household goods— | | | | | | | |
| *a.* Furniture: | | | | | | | |
| Furniture | — | — | — | 133 | 133 | 66·5 | |
| Musical instruments | 12 | — | — | 18 | 30 | 9·36 | |
| Art works | — | — | — | 5 | 5 | 2·5 | |
| Total *a.* | 12 | — | — | 156 | 168 | | |
| *b.* Hardware: | | | | | | | |
| Crockery, etc. | — | — | — | 107 | 107 | 53·5 | |
| Utensils, cutlery, etc. | 16 | 76 | 20 | 16 | 128 | 20·08 | |
| Lanterns, lamps, etc. | 5 | 1 | — | 11 | 17 | 5·75 | |
| Electrical goods | 7 | — | — | — | 7 | ·21 | |
| Sewing machines | 10 | — | — | — | 10 | ·5 | |
| Total *b.* | 38 | 77 | 20 | 134 | 269 | | |

CC-0. In Public Domain. Gurukul Kangri Collection, Haridwar

Digitized by Arya Samaj Foundation Chennai and eGangotri



TABLE 3 (cont.).—*Consumer expenditure, 1938–9. Reliability*
(*Rs. Million*)

| | *A* | *B* | *C* | *D* | *Total* | *Error* | *Error %* |
|---|---|---|---|---|---|---|---|
| *c.* Other Household goods: | | | | | | | |
| Matches | 55 | — | — | — | 55 | 1·65 | |
| Soap | 9 | — | 63 | — | 72 | 12·87 | |
| Bamboo products | — | — | — | 97 | 97 | 48·5 | |
| Other | 10 | — | — | 6 | 16 | 3·3 | |
| Total *c.* | 74 | — | 63 | 103 | 240 | | |
| Total Household goods | 124 | 77 | 83 | 393 | 677 | 101·72* | 15·02 |
| 9. Personal effects | 62 | 47 | 44 | 88 | 241 | 59·36 | 24·63 |
| 10. Amusements | 35 | — | — | 46 | 81 | 24·05 | 29·69 |
| 11. Reading matter | 8 | — | 142 | — | 150 | 28·64 | 19·10 |
| 12. Private transport | 31 | 128 | — | 5 | 164 | 16·23 | 9·90 |
| 13. Public transport— | | | | | | | |
| Long distance | 307 | — | — | — | 307 | 9·21 | |
| Local and suburban | — | — | 102 | — | 102 | 20·4 | |
| Total Public transport | 307 | — | 102 | — | 409 | 22·38* | 5·47 |
| 14. Communications— | | | | | | | |
| Letters and parcels | 47 | — | — | — | 47 | | |
| Telegrams | 15 | — | — | — | 15 | | |
| Telephones | 4 | — | — | — | 4 | | |
| Total Communications | 66 | — | — | — | 66 | 1·98 | 3·0 |
| 15. Services— | | | | | | | |
| Education | 114 | 106 | — | 55 | 275 | 41·52 | |
| Medicine | 15 | — | — | 203 | 218 | | |
| Food | — | — | — | 87 | 87 | | |
| Dress and toilet | — | — | — | 813 | 813 | | |
| Religion | — | — | — | 209 | 209 | 915·45 | |
| Domestic | — | — | — | 464 | 464 | | |
| Manual Labour | — | — | — | 15 | 15 | | |
| Prostitutes | — | — | — | 39 | 39 | | |
| Miscellaneous | 73 | — | — | 13 | 86 | 8·69 | |
| Total Services | 202 | 106 | — | 1,898 | 2,206 | 916·43* | 41·54 |
| Grand total | 7,910 | 5,093 | 5,131 | 7,718 | 25,852 | 1,856·37*** | 7·18 |

*Note.*—Errors in items have no individual significance beyond the classification into reliability categories.

7.2. Owing to differences in classification various adjustments were made to the Indian figures to give comparability. These were:

| *Item* | *Amount Million Rupees* | *Shifted from Group* | *Shifted to Group* |
|---|---|---|---|
| 1. Furnishing textiles | 100* | Clothing | Household goods |
| 2. Services of tailors | 156 | Services | Clothing |
| 3. Sewing machines | 8 | Household goods | ,, |
| 4. Clocks | 1 | ,, | Personal effects |
| 5. Jewellers' services | 276 | Services | ,, ,, |
| 6. Money order receipts | 11 | ,, | Communications |
| 7. Services of prostitutes | 39 | ,, | Omitted |
| 8. Drugs and medicines | 17 | ,, | Personal effects |

* A guess.

CC-0. In Public Domain. Gurukul Kangri Collection, Haridwar

Digitized by Arya Samaj Foundation Chennai and eGangotri



TABLE 4.—*Group distribution of consumer expenditure*
*(Per cent. of the total)*

| | *India* 1938–9 | *United Kingdom* 1938 | *United States* 1938 |
|---|---|---|---|
| Food | 60·5 | 30·1 | 21·8 |
| Alcoholic drinks and drugs | 1·1 | 6·6 | 5·1 |
| Tobacco | 4·7 | 4·1 | 2·7 |
| Clothing | 9·8 | 8·8 | 8·4 |
| Footwear | ·7 | 1·7 | 2·0 |
| Housing | 6·0 | 11·5 | 14·1 |
| Fuel | 2·1 | 4·6 | 4·1 |
| Household goods | 3·0 | 6·7 | 6·5 |
| Personal effects | 2·1 | 4·1 | 3·7 |
| Amusements | ·3 | 1·5 | 1·8 |
| Reading matter | ·6 | 1·5 | 1·1 |
| Private transport | ·6 | 3·0 | 6·7 |
| Public transport | 1·6 | 3·8 | 1·9 |
| Communications | ·3 | ·7 | 1·0 |
| Services | 6·6 | 11·3 | 19·1 |

Sources:

*India:* Table 1, Adjustments 7.2.

U.K.: *National Income and Expenditure of the United Kingdom, 1947.* Cmd. 7371. H.M.S.O. April, 1948.

U.S.: "National Income." Supplement to *Survey of Current Business.* United States Department of Commerce, July, 1947.

## 8. *Distribution of food expenditure*

8.1. We may next obtain a breakdown of expenditure on food into major groups (Table 5). It is unfortunate that similar data for the United States could not be obtained anywhere. The United Kingdom indices relate only to household expenditure on food as details of "Other personal expenditure" on food, i.e. the cost to the establishments of the food consumed in restaurants and hotels are not available. The Indian figures include this item, but its significance is negligible.

8.2. Mainly owing to poverty (and to a small extent to vegetarianism) the proportion of expenditure on cereals is higher than on protein foods like meat and fish. Even if pulses are included with meat and fish, the expenditure on protein foods will be less than 10 per cent of the total, compared with 32 per cent in the United Kingdom. Fruit values are probably an overestimate and the figure is not very trustworthy. Equally unreliable is the figure for spices, but it is more than probable that Indians stand up to their reputation as consumers of spices.

TABLE 5.—*Distribution of food expenditure*
*(Per cent. of the total)*

| | *India* 1938–9 | *United Kingdom* 1938 |
|---|---|---|
| Cereals and pulses | 36·5 | 13·7 |
| Meat and fish | 5·7 | 31·9 |
| Oils and fats | 9·7 | 6·6 |
| Sugar | 8·1 | 9·4 |
| Dairy products | 12·8 | 13·9 |
| Fruits and vegetables | 17·8 | 15·6 |
| Non-alcoholic beverages | ·6 | 5·7 |
| Spices | 7·7 | 3·2 |
| Miscellaneous | 1·1 | |

Sources:

*India:* Table 1. Non-alcoholic beverages include soft drinks and ice, which are excluded from the Miscellaneous group.

U.K.: *National Income and Expenditure of the United Kingdom, 1947.* Cmd. 7371.



CC-0. In Public Domain. Gurukul Kangri Collection, Haridwar

Digitized by Arya Samaj Foundation Chennai and eGangotri



### 9. *Growth of consumption in "real" terms*

9.1. In this last Section an answer may be sought to the question whether consumption is rising or falling and how the various groups show up in this respect. Table 6 gives consumer expenditure in "real" terms. I have revalued physical quantities of purchases at 1938–9 prices. There are obvious limitations to revaluation, the most significant of these being that quality changes, which are not reflected in the price indices used for revaluation, cannot be taken into account. In order to give as accurate a picture as possible, I have divided the figures of purchases into as many sub-categories as could be obtained.

TABLE 6.—*Consumer expenditure* 1931–2 *to* 1940–1. *Revalued at* 1938–9 *prices* (*Rs. million*)

| 1. Food— | 1931–2 | 1932–3 | 1933–4 | 1934–5 | 1935–6 | 1936–7 | 1937–8 | 1938–9 | 1939–40 | 1940–1 |
|---|---|---|---|---|---|---|---|---|---|---|
| *a.* Cereals and pulses: | | | | | | | | | | |
| Rice | 3,419 | 3,136 | 3,184 | 3,235 | 2,853 | 3,382 | 3,234 | 2,940 | 3,013 | 2,841 |
| Wheat | 725 | 701 | 732 | 725 | 766 | 713 | 714 | 849 | 794 | 842 |
| Jowar and bajra | 708 | 721 | 715 | 696 | 699 | 737 | 713 | 711 | 706 | 807 |
| Gram and pulse | 608 | 655 | 605 | 661 | 608 | 629 | 614 | 585 | 524 | 544 |
| Other | 695 | 698 | 675 | 664 | 681 | 651 | 645 | 619 | 614 | 668 |
| Total *a.* | 6,155 | 5,911 | 5,911 | 5,981 | 5,607 | 6,112 | 5,920 | 5,704 | 5,651 | 5,702 |
| *b.* Meat: | | | | | | | | | | |
| Beef | 162 | 145 | 146 | 158 | 163 | 171 | 176 | 179 | 185 | 193 |
| Mutton | 220 | 237 | 245 | 250 | 250 | 238 | 232 | 240 | 248 | 257 |
| Poultry | 34 | 35 | 36 | 36 | 37 | 38 | 39 | 40 | 40 | 41 |
| Other | 43 | 43 | 44 | 46 | 47 | 47 | 47 | 48 | 49 | 50 |
| Total *b.* | 459 | 460 | 471 | 490 | 497 | 494 | 493 | 507 | 522 | 541 |
| *c.* Fish | 382 | 383 | 383 | 382 | 381 | 381 | 382 | 383 | 383 | 383 |
| *d.* Oils and fats: | | | | | | | | | | |
| Butter | 29 | 30 | 30 | 30 | 30 | 30 | 30 | 31 | 30 | 30 |
| Ghee | 1,070 | 1,021 | 973 | 953 | 953 | 943 | 980 | 972 | 981 | 963 |
| Vegetable oils, etc. | 472 | 395 | 490 | 512 | 393 | 456 | 449 | 505 | 443 | 526 |
| Total *d.* | 1,571 | 1,446 | 1,493 | 1,495 | 1,376 | 1,429 | 1,459 | 1,508 | 1,454 | 1,519 |
| *e.* Sugar | 853 | 937 | 1,055 | 1,126 | 1,175 | 1,235 | 1,413 | 1,267 | 808 | 963 |
| *f.* Dairy products: | | | | | | | | | | |
| Milk and milk products, ex. ghee and butter | 1,840 | 1,819 | 1,820 | 1,839 | 1,859 | 1,917 | 1,996 | 1,957 | 2,017 | 2,053 |
| Eggs | 32 | 33 | 33 | 34 | 35 | 36 | 37 | 37 | 38 | 39 |
| Total *f.* | 1,872 | 1,852 | 1,853 | 1,873 | 1,894 | 1,953 | 2,033 | 1,994 | 2,055 | 2,092 |
| *g.* Fruits and vegetables | 2,724 | 2,745 | 2,659 | 2,796 | 2,795 | 2,825 | 2,767 | 2,784 | 2,834 | 2,816 |
| *h.* Spices: | | | | | | | | | | |
| Betelnuts | 110 | 110 | 103 | 104 | 102 | 113 | 123 | 143 | 132 | 132 |
| Other | 1,015 | 1,115 | 1,112 | 1,048 | 1,278 | 1,245 | 1,099 | 1,056 | 1,139 | 1,187 |
| Total *h.* | 1,125 | 1,225 | 1,215 | 1,152 | 1,380 | 1,358 | 1,222 | 1,199 | 1,271 | 1,319 |
| *i.* Salt, etc. | 153 | 133 | 148 | 140 | 149 | 156 | 156 | 150 | 165 | 160 |
| *j.* Non-alcoholic beverages: | | | | | | | | | | |
| Tea | 39 | 40 | 41 | 48 | 51 | 51 | 58 | 61 | 52 | 46 |
| Coffee | 17 | 14 | 13 | 16 | 17 | 23 | 20 | 15 | 20 | 22 |
| Total *j.* | 56 | 54 | 54 | 64 | 68 | 74 | 78 | 76 | 72 | 68 |

CC-0. In Public Domain. Gurukul Kangri Collection, Haridwar

Digitized by Arya Samaj Foundation Chennai and eGangotri



TABLE 6 (cont.).—*Consumer expenditure 1931–2 to 1940–1. Revalued at 1938–9 prices*
(*Rs. million*)

| | 1931–2 | 1932–3 | 1933–4 | 1934–5 | 1935–6 | 1936–7 | 1937–8 | 1938–9 | 1939–40 | 1940–1 |
|---|---|---|---|---|---|---|---|---|---|---|
| *k.* Miscellaneous: | | | | | | | | | | |
| Other provisions | 19 | 21 | 19 | 18 | 19 | 18 | 20 | 20 | 19 | 17 |
| Ice and soft drinks | 17 | 17 | 16 | 18 | 20 | 22 | 24 | 24 | 25 | 26 |
| Total *k.* | 36 | 38 | 35 | 36 | 39 | 40 | 44 | 44 | 44 | 43 |
| Total Food | 15,386 | 15,184 | 15,277 | 15,535 | 15,361 | 16,057 | 15,948 | 15,616 | 15,259 | 15,606 |
| 2. Alcoholic drinks and Narcotic drugs— | | | | | | | | | | |
| *a.* Alcoholic drinks: | | | | | | | | | | |
| Country spirits and fermented liquors | 140 | 143 | 148 | 157 | 165 | 167 | 186 | 170 | 153 | 159 |
| "Foreign" liquors | 90 | 62 | 61 | 62 | 64 | 66 | 64 | 65 | 62 | 69 |
| Total *a.* | 230 | 205 | 209 | 219 | 229 | 233 | 250 | 235 | 215 | 228 |
| *b.* Narcotic drugs: | | | | | | | | | | |
| Opium | 30 | 28 | 27 | 27 | 25 | 26 | 25 | 24 | 22 | 22 |
| Hemp, drugs, etc. | 27 | 27 | 28 | 29 | 29 | 31 | 30 | 27 | 22 | 22 |
| Total *b.* | 57 | 55 | 55 | 56 | 54 | 57 | 55 | 51 | 44 | 44 |
| Total Alcoholic drinks and Narcotic drugs | 287 | 260 | 264 | 275 | 283 | 290 | 305 | 286 | 259 | 272 |
| 3. Tobacco— | | | | | | | | | | |
| Cigarettes | 70 | 72 | 72 | 69 | 72 | 77 | 83 | 88 | 104 | 123 |
| Cigars and cheroots | 246 | 235 | 217 | 188 | 179 | 188 | 198 | 188 | 207 | 217 |
| Bidis | 141 | 141 | 141 | 141 | 141 | 141 | 141 | 141 | 141 | 141 |
| Other products | 645 | 675 | 708 | 623 | 825 | 737 | 663 | 786 | 741 | 725 |
| Total Tobacco | 1,102 | 1,123 | 1,138 | 1,021 | 1,217 | 1,143 | 1,085 | 1,203 | 1,193 | 1,206 |
| 4. Dress materials and furnishing textiles— | | | | | | | | | | |
| Cotton | 1,682 | 1,725 | 1,673 | 1,746 | 1,766 | 1,831 | 1,812 | 1,904 | 1,983 | 1,977 |
| Silk | 93 | 127 | 160 | 115 | 122 | 157 | 86 | 138 | 98 | 153 |
| Rayon | 173 | 251 | 162 | 122 | 169 | 173 | 181 | 231 | 144 | 252 |
| Woollen | 104 | 132 | 139 | 121 | 120 | 118 | 119 | 120 | 104 | 83 |
| "Mixtures" | 28 | 18 | 17 | 35 | 42 | 54 | 74 | 64 | 80 | 111 |
| Coir, hair, etc. | 25 | 23 | 18 | 23 | 19 | 21 | 24 | 19 | 6 | 34 |
| Total textiles | 2,105 | 2,276 | 2,169 | 2,162 | 2,238 | 2,354 | 2,296 | 2,476 | 2,415 | 2,610 |
| 5. Footwear | 125 | 124 | 126 | 121 | 126 | 139 | 167 | 168 | 193 | 237 |
| 6. Housing— | | | | | | | | | | |
| Rent | 1,281 | 1,265 | 1,306 | 1,335 | 1,315 | 1,312 | 1,327 | 1,355 | 1,392 | 1,422 |
| Rates | 192 | 192 | 197 | 204 | 199 | 200 | 203 | 206 | 209 | 214 |
| Total Housing. | 1,473 | 1,457 | 1,503 | 1,539 | 1,514 | 1,512 | 1,530 | 1,561 | 1,601 | 1,636 |
| 7. Fuel, light and power— | | | | | | | | | | |
| Dungcakes | 90 | 90 | 90 | 90 | 90 | 90 | 90 | 90 | 90 | 90 |
| Firewood and charcoal | 179 | 178 | 181 | 189 | 195 | 190 | 201 | 194 | 190 | 197 |
| Kerosene | 189 | 169 | 154 | 173 | 163 | 175 | 193 | 178 | 178 | 178 |
| Electricity | 28 | 28 | 30 | 32 | 34 | 38 | 44 | 48 | 52 | 56 |
| Oils, gas, etc. | 29 | 31 | 37 | 36 | 32 | 35 | 41 | 38 | 40 | 33 |
| Total fuel, light and power | 515 | 496 | 492 | 520 | 514 | 528 | 569 | 548 | 550 | 554 |
| 8. Household goods— | | | | | | | | | | |
| *a.* Furniture: | | | | | | | | | | |
| Furniture | 100 | 108 | 104 | 110 | 118 | 113 | 132 | 133 | 139 | 151 |
| Musical instruments | 23 | 21 | 23 | 27 | 29 | 30 | 32 | 30 | 33 | 36 |
| Art works | 5 | 5 | 5 | 5 | 5 | 5 | 5 | 5 | 5 | 5 |
| Total *a.* | 128 | 134 | 132 | 142 | 152 | 148 | 169 | 168 | 177 | 192 |

CC-0. In Public Domain. Gurukul Kangri Collection, Haridwar

Digitized by Arya Samaj Foundation Chennai and eGangotri



TABLE 6 (cont).—*Consumer expenditure* 1931–2 *to* 1940–1. *Revalued at* 1938–9 *prices*
(*Rs. million*)

| | 1931–2 | 1932–3 | 1933–4 | 1934–5 | 1935–6 | 1936–7 | 1937–8 | 1938–9 | 1939–40 | 1940–1 |
|---|---|---|---|---|---|---|---|---|---|---|
| *b.* Hardware: | | | | | | | | | | |
| Crockery, earthenware and glassware | 92 | 96 | 96 | 98 | 100 | 102 | 107 | 107 | 109 | 111 |
| Utensils, cutlery and hardware | 130 | 115 | 161 | 145 | 192 | 176 | 126 | 128 | 119 | 120 |
| Electric bulbs, lanterns and lamps | 8 | 10 | 12 | 16 | 18 | 17 | 23 | 17 | 18 | 26 |
| Electrical goods | 3 | 3 | 4 | 5 | 6 | 8 | 8 | 7 | 8 | 8 |
| Sewing machines | 7 | 6 | 8 | 12 | 12 | 9 | 15 | 10 | 12 | 6 |
| Total *b.* | 240 | 230 | 281 | 276 | 328 | 312 | 279 | 269 | 266 | 271 |
| *c.* Other Household goods: | | | | | | | | | | |
| Matches | 36 | 36 | 36 | 42 | 52 | 53 | 56 | 55 | 57 | 62 |
| Soap and washing soda | 55 | 59 | 62 | 59 | 53 | 57 | 59 | 72 | 68 | 81 |
| Bamboo products | 104 | 100 | 97 | 96 | 94 | 90 | 104 | 97 | 100 | 105 |
| Other | 14 | 15 | 15 | 17 | 17 | 17 | 19 | 16 | 16 | 13 |
| Total *c.* | 209 | 210 | 210 | 214 | 216 | 217 | 238 | 240 | 241 | 261 |
| Total Household goods | 577 | 574 | 623 | 632 | 696 | 677 | 686 | 677 | 684 | 724 |
| 9. Personal effects | 160 | 179 | 198 | 187 | 209 | 216 | 235 | 241 | 240 | 219 |
| 10. Amusements | 55 | 60 | 65 | 65 | 72 | 73 | 80 | 81 | 95 | 97 |
| 11. Reading matter | 95 | 95 | 100 | 115 | 117 | 125 | 140 | 150 | 156 | 168 |
| 12. Private transport | 126 | 127 | 144 | 170 | 172 | 182 | 182 | 164 | 167 | 151 |
| 13. Public transport— | | | | | | | | | | |
| Long distance | 304 | 302 | 291 | 293 | 295 | 292 | 310 | 307 | 305 | 315 |
| Local and suburban | 89 | 88 | 93 | 97 | 98 | 98 | 103 | 102 | 99 | 109 |
| Total public transport | 393 | 390 | 384 | 390 | 393 | 390 | 413 | 09 | 404 | 424 |
| 14. Communications— | | | | | | | | | | |
| Letters and parcels | 42 | 41 | 41 | 42 | 44 | 44 | 47 | 47 | 47 | 48 |
| Telegrams | 16 | 15 | 16 | 16 | 16 | 16 | 16 | 15 | 18 | 20 |
| Telephones | 2 | 3 | 3 | 3 | 3 | 3 | 4 | 4 | 4 | 5 |
| Total Communications | 60 | 59 | 60 | 61 | 63 | 63 | 67 | 66 | 69 | 73 |
| 15. Services— | | | | | | | | | | |
| *a.* Medicine | 177 | 179 | 179 | 190 | 200 | 208 | 210 | 218 | 226 | 228 |
| *b.* Education | 226 | 229 | 232 | 242 | 246 | 253 | 264 | 275 | 289 | 302 |
| *c.* Food | 89 | 87 | 84 | 80 | 84 | 89 | 89 | 87 | 93 | 98 |
| *d.* Dress and toilet: | | | | | | | | | | |
| Tailoring | 121 | 139 | 131 | 140 | 144 | 145 | 148 | 156 | 156 | 151 |
| Laundry | 156 | 179 | 168 | 181 | 185 | 187 | 190 | 201 | 201 | 195 |
| Barbers | 163 | 165 | 168 | 170 | 173 | 175 | 178 | 180 | 182 | 187 |
| Jewellers | 276 | 271 | 262 | 249 | 262 | 276 | 290 | 276 | 304 | 331 |
| Total *d.* | 716 | 754 | 729 | 740 | 764 | 783 | 806 | 813 | 843 | 864 |
| *e.* Religion | 268 | 254 | 239 | 218 | 222 | 221 | 213 | 209 | 224 | 233 |
| *f.* Domestic | 422 | 413 | 401 | 380 | 422 | 422 | 443 | 464 | 485 | 527 |

CC-0. In Public Domain. Gurukul Kangri Collection, Haridwar

Digitized by Arya Samaj Foundation Chennai and eGangotri



TABLE 6 (cont.).—*Consumer expenditure 1931–2 to 1940–1. Revalued at 1938–9 prices (Rs. million)*

| | 1931–2 | 1932–3 | 1933–4 | 1934–5 | 1935–6 | 1936–7 | 1937–8 | 1938–9 | 1939–40 | 1940–1 |
|---|---|---|---|---|---|---|---|---|---|---|
| *g.* Manual labour . | 15 | 15 | 15 | 14 | 15 | 15 | 15 | 15 | 16 | 17 |
| *h.* Prostitutes . . | 32 | 33 | 34 | 35 | 36 | 37 | 38 | 39 | 42 | 45 |
| *i.* Miscellaneous: . | 54 | 57 | 60 | 64 | 71 | 76 | 82 | 86 | 90 | 98 |
| Total Services . | 1,999 | 2,021 | 1,973 | 1,963 | 2,060 | 2,104 | 2,160 | 2,206 | 2,308 | 2,412 |
| Grand Total . | 24,458 | 24,425 | 24,516 | 24,756 | 25,035 | 25,853 | 25,863 | 25,852 | 25,593 | 26,389 |
| Expenditure per capita (Rs.) | 71·8 | 70·9 | 70·0 | 69·7 | 69·5 | 70·8 | 69·8 | 68·8 | 67·2 | 68·3 |

9.2. Errors in the differences between successive years are likely to be smaller than the error in the absolute level (as indicated in 6.4), since a considerable part of the error in the estimate for each year will be due to common sources which have a similar effect on each year's estimate. Again, values at constant prices are more reliable than current values, as errors arising from data on variations in prices are removed. Errors due to neglect of quality changes, however, offset this advantage to some extent.

9.3. The figures presented in Table 6 are good enough to give only an approximate idea of the cyclical movement of consumer expenditure. For lack of data I have not been able to consider changes in stocks, or measure and adjust for the time lags in economic relationships. Further, in a few cases I could get data to give only an undated approximation of absolute quantities. Nothing was available to indicate the scope and direction of change during the period, and I was forced to assume constant quantities over the entire period. It is inadvisable to use the figures for econometric studies of the trade cycle, beyond the general impressions given by the global totals.

9.4. It is only after considerable pruning that the figures can be used for broad observations on general trends. In Table 7 I have deleted items for which year-to-year information was either unavailable or inadequate. The Table covers only the following:

Food: Cereals and pulses, vegetable oils, sugar, fruits and vegetables, spices, excluding betelnuts, salt, and non-alcoholic beverages.

Alcoholic drinks and Narcotic drugs.

Tobacco.

Dress materials and furnishing textiles: Cotton, rayon, "mixtures" and imports of woollen and silk goods.

Housing: Urban rents, and rates levied in British India.

Fuel: Kerosene and electricity.

Household goods: Utensils, electrical goods, including lamps, sewing machines, matches, candles and nightlights, polishes, ammonia, camphor and saffron.

Personal effects: All types of stationery, spectacles, cameras, cycles, watches and buttons.

Private transport: Motor cars and motor cycles.

Public transport: Long distance transport only.

Communications.

Services: Education.

9.5. Table 8 gives percentage variations in the nine years 1932–3 to 1940–1 with respect to the initial year 1931–2.

9.6. By deleting unsatisfactory items the picture presented gains in accuracy. The total figures, however, may contain errors arising from excluded items. But I believe the main outlines remain unaffected. From value totals in both Tables 6 and 7 two facts stand out very prominently: (*a*) Total consumer expenditure has been slowly rising in spite of, and even during, the Depression.* But the rise has not been sufficient to offset the rapid growth in population, and the per capita expenditure has, therefore, been falling. I do not know whether net capital forma-

* With the exception of 1932–3, which shows the influence of the relatively poor harvest in 1932, following a good one in 1931.

CC-0. In Public Domain. Gurukul Kangri Collection, Haridwar

Digitized by Arya Samaj Foundation Chennai and eGangotri



TABLE 7.—*Growth of consumer expenditure at 1938–9 prices*
(*Rs. million*)

| | 1931–2 | 1932–3 | 1933–4 | 1934–5 | 1935–6 | 1936–7 | 1937–8 | 1938–9 | 1939–40 | 1940–1 |
|---|---|---|---|---|---|---|---|---|---|---|
| Food | 11,428 | 11,290 | 11,429 | 11,667 | 11,465 | 12,103 | 11,882 | 11,542 | 11,112 | 11,422 |
| Alcoholic drinks and narcotic drugs | 287 | 260 | 264 | 275 | 283 | 290 | 305 | 286 | 259 | 272 |
| Tobacco | 1,102 | 1,123 | 1,138 | 1,021 | 1,217 | 1,143 | 1,085 | 1,203 | 1,193 | 1,206 |
| Dress materials and furnishing textiles | 1,916 | 2,063 | 1,923 | 1,979 | 2,028 | 2,100 | 2,123 | 2,235 | 2,231 | 2,355 |
| Housing | 1,031 | 1,014 | 1,051 | 1,079 | 1,054 | 1,050 | 1,064 | 1,087 | 1,119 | 1,148 |
| Fuel | 217 | 197 | 184 | 205 | 197 | 213 | 237 | 226 | 230 | 234 |
| Household goods | 180 | 165 | 214 | 213 | 271 | 254 | 217 | 207 | 204 | 201 |
| Personal effects | 30 | 34 | 36 | 40 | 43 | 51 | 59 | 52 | 45 | 37 |
| Reading matter | 95 | 95 | 100 | 115 | 117 | 125 | 140 | 150 | 156 | 168 |
| Private motoring | 121 | 122 | 139 | 165 | 167 | 177 | 177 | 159 | 162 | 146 |
| Public transport: Long distance | 304 | 302 | 291 | 293 | 295 | 292 | 310 | 307 | 305 | 315 |
| Communications | 60 | 59 | 60 | 61 | 63 | 63 | 67 | 66 | 69 | 73 |
| Education | 226 | 229 | 232 | 242 | 246 | 253 | 264 | 275 | 289 | 302 |
| Total | 16,997 | 16,953 | 17,061 | 17,355 | 17,446 | 18,114 | 17,930 | 17,795 | 17,374 | 17,879 |
| Per capita | 49·9 | 49·1 | 48·7 | 48·9 | 48·4 | 49·6 | 48·4 | 47·4 | 45·6 | 46·3 |

TABLE 8.—*Variation in consumer expenditure, 1932–3 to 1940–1*
(*Per cent. of 1931–2 level*)

| | 1932–3 | 1933–4 | 1934–5 | 1935–6 | 1936–7 | 1937–8 | 1938–9 | 1939–40 | 1940–1 |
|---|---|---|---|---|---|---|---|---|---|
| Food | −1·2 | — | 2·1 | ·3 | 5·9 | 4·0 | 1·0 | −2·8 | − ·1 |
| Alcoholic drinks and drugs | −9·4 | −8·0 | −4·2 | −1·4 | 1·0 | 6·3 | − ·3 | −9·8 | −5·2 |
| Tobacco | 1·9 | 3·3 | −7·4 | 10·4 | 3·7 | −1·5 | 9·2 | 8·3 | 9·4 |
| Dress and furnishing textiles | 7·7 | ·4 | 3·3 | 5·8 | 9·6 | 10·8 | 16·7 | 16·5 | 22·9 |
| Housing | −1·6 | 1·9 | 4·7 | 2·2 | 1·8 | 3·2 | 5·4 | 8·5 | 11·3 |
| Fuel | −9·2 | −15·2 | −5·5 | −9·2 | −1·8 | 9·2 | 4·1 | 6·0 | 7·8 |
| Household goods | −8·3 | 18·9 | 18·3 | 50·6 | 41·1 | 20·6 | 15·0 | 13·3 | 11·7 |
| Personal effects | 13·3 | 20·0 | 33·3 | 43·3 | 70·0 | 96·7 | 73·3 | 50·0 | 23·3 |
| Reading matter | — | 5·3 | 21·1 | 23·2 | 31·6 | 47·4 | 57·9 | 64·2 | 76·8 |
| Private motoring | ·8 | 14·9 | 36·4 | 38·0 | 46·3 | 46·3 | 31·4 | 33·9 | 20·7 |
| Public transport: Long distance | − ·7 | −4·3 | −3·6 | −3·0 | −3·9 | 2·0 | 1·0 | ·3 | 3·6 |
| Communications | −1·7 | — | 1·7 | 5·0 | 5·0 | 11·7 | 10·0 | 15·0 | 21·7 |
| Education | 1·3 | 2·7 | 7·1 | 8·8 | 11·9 | 16·8 | 21·7 | 27·9 | 33·6 |
| Total | − ·3 | ·4 | 2·1 | 2·6 | 6·6 | 5·5 | 4·7 | 2·2 | 5·2 |
| Population | 1·4 | 2·8 | 4·3 | 5·8 | 7·3 | 8·8 | 10·3 | 11·9 | 13·5 |
| Per capita | −1·6 | −2·4 | −2·0 | −3·0 | − ·6 | −3·0 | −5·0 | −8·6 | −7·2 |
| Grand Total* | − ·1 | ·2 | 1·2 | 2·4 | 5·7 | 5·7 | 5·7 | 4·6 | 7·9 |
| Per capita | −1·5 | −2·5 | −2·9 | −3·2 | −1·4 | −2·8 | −4·2 | −6·4 | −4·9 |

* Including omitted values (Table 6).

tion and government expenditure (less indirect taxes) have been together growing fast enough to counteract the fall in per capita expenditure. It is quite probable that national income per capita has not been rising as is generally believed. (*b*) The most serious cause for concern, however, is that the consumption of food, except for the variations caused by freaks of nature, has been steady while the population has been increasing rapidly, giving rise to a situation worse than that contemplated by Malthus. If casual evidence can be trusted, none of the omitted items (except poultry) has shown any compensatory rise. If anything, sources of the supply of milk and fish are deteriorating, and little is known about the yield of mutton and beef.

9.7. There is, however, an optimistic side to the picture. The growth of urbanization, literacy and the increasing contact with western civilization, made easier by the improved means of communication, have led to a rapid growth in many of the so-called "externals" of life. Clothing,*

* And also footwear, but the figures, not being very reliable, are omitted.

CC-0. In Public Domain. Gurukul Kangri Collection, Haridwar

Digitized by Arya Samaj Foundation Chennai and eGangotri



household goods, personal effects, reading matter, private motoring, communications, and private expenditure on education—all are increasing more rapidly than the population. There has been a growth in housing, but it has been relatively slow, which suggests relative congestion. Consumption of electricity has nearly doubled at the expense of kerosene, though the great fall in kerosene consumption in earlier years probably shows the effect of the depression on consumption in rural areas where no electricity is available and kerosene is the only significant source of light. Drinks and drugs show a fall during the Depression, and a subsequent rise was arrested by the prohibitionary zeal of Congress governments. Changes in the yield of tobacco are not adequately recorded, and the failure to consider quality changes under-estimates the increasing expenditure on smoking. Long distance travel (all by railways) shows a fall during the Depression, but there was a slow recovery during the later years.

9.8. Having offered only a few broad observations I shall end my paper with this picture in mind—an increasing number of motor cars, wireless sets, electricity, telephones, cinemas, newspapers, periodicals and books, and clothing in greater quantities and superior qualities, all overshadowed, however, by Malthusian portents looming on the horizon, and waiting for a little twist of nature to swoop down on the teeming millions of human lives.

*Acknowledgments*

I have the greatest pleasure in gratefully acknowledging the help and guidance I received from Professor D. H. Robertson, who supervised the earlier period of my work (begun in 1944), and from Mr. J. R. N. Stone, under whose guidance it took its present shape. I am also grateful to Sir Theodore Gregory, the Economic Adviser to the Government of India, who helped me find my way through the maze of the Imperial Secretariat and its offshoots at New Delhi. It is needless to add that a work of this sort cannot but depend on the interest and willing co-operation of myriads of officials and others whose help was significant and whose numbers were vast. I should also thank Mr. C. F. Carter, who kindly advised me at various stages of the work. The greatest demands, however, were made on the unfailing kindness and courtesy of Miss Thorne, the Librarian of India House, and Mr. Parsons, of Cambridge University Library, and their staff. They alone know the burdens such work imposed on them.

I also wish to acknowledge the kind help I received in the preparation of this paper from Miss A. Chapman, Dr. G. Orcutt, Mr. C. R. Rao, and Mr. F. Winter.

*Appendix A.—Official estimates of the production of crops*

1. Notes in this Appendix concern items 1–5, 13, 14, 17, 19, 21, 22 and 29–32, listed in brackets in Table 1.

2. The basic publications on agricultural statistics in India are the *Season and Crop Reports* issued by the Department of Agriculture or Land Records in each Provincial Administration, giving information in terms of each district. The Director-General of Commercial Intelligence and Statistics (hereafter referred to as D.G.C.I.S.) issues annually two central publications: *Agricultural Statistics of India*, Vol. 1 (British India) and Vol. 2 (Indian States), and *Estimates of Area and Yield of Principal Crops in India*. The latter is issued soon after the harvest, and sets out the figures published in the final forecasts. *Ag. Stats.* is a later publication, gives area estimates only and incorporates revised estimates. The coverages of the two publications do not coincide. Inclusion in *Ag. Stats.* requires information only on crop acreage and not yield, and the coverage tends to be wider. On the other hand, it requires a complete crop classification of all cultivated soil. For *Estimates* the approach is on the basis of individual crops, and thus areas for which complete classification (by crops) is not available but which supply information in respect of particular crops are included in Tables on those crops. A further source of information is *The Food Statistics of India*, issued by the Food Department in 1946, incorporating the information on the area and out-turn of rice, wheat, jowar, bajra, maize and barley received from the hitherto "non-reporting" areas for the years 1936–7 onwards. I am, however, suspicious of these figures. They were all obtained during the war after the creation of the Food Department and the tragedies of the Bengal famine. When a general scarcity is feared and when the Food Department with its power to requisition food supplies calls for information mostly from native states, the figures so obtained are likely to be biased. Every unit, whether deficit or surplus, was interested in

CC-0. In Public Domain. Gurukul Kangri Collection, Haridwar

Digitized by Arya Samaj Foundation Chennai and eGangotri


underestimating its supplies, either in order to secure more supplies, or to part with as little of its own supplies as possible. A source of frequent check on official statistics and in some cases the only source of information is the long series of *Marketing Reports* issued by the Agricultural Marketing Adviser to the Government of India. These *Reports* provide us with good descriptive material and specific instances being the product of "inquiries." The dignified term "survey" (e.g. market survey) often indicates that a member of the marketing staff went to a town market and inquired from one or two "prominent" merchants the volume of produce coming to the market, or from a couple of "typical" shopkeepers the prices obtained for it. In preference to a total black-out such information has often been used, but its statistical value can only be exaggerated.

3. The maximum possible coverage was obtained by "grafting" data into the various publications, and production in the relatively dark portion was guessed with reference to adjoining territories, etc. The proportion accounted for by such guesses hardly exceeds 1 per cent. of the total production.

4. Production in official statistics is estimated by the traditional formula: area under crop × standard yield × seasonal or crop condition factor. Area estimates in respect of permanently settled Provinces (particularly Bengal and Bihar) are very inaccurate, as there is no permanent revenue agency (known as the *Patwari* Agency) as in temporary settlement Provinces. The most serious omission, viz. area under rice in Bengal, was corrected in the light of Prof. Mahalanobis's Area Surveys by Random Sampling Method, results of which were kindly supplied by the Indian Statistical Institute. (See also Prof. Mahalanobis's Report on the Bihar Crop Survey: Rabi Season 1943–4 in *Sankhyā*, Vol. 7, Part 1.) The official figures of standard yield are obtained by selective crop-cutting experiments over a period, usually of five years. In actual practice these standard yields in quite a number of cases have been going on without revision for a series of quinquennial periods. Selectivity introduces subjective bias. (See Hubback, "Sampling of Rice Yields in Bihar," *Sankhya*, Vol. 7, Part 3.) The height of subjectivity is reached in the estimation of the Seasonal factor. Each successive officer (from the *Patwari*—the man on the spot—upwards) makes his subjective estimate of the current year's crop per cent. (or annas in a rupee) of the normal. It has been generally believed that this tends to underestimate the yield. Various reasons are given for this, the most general being the *Patwari's* pessimism. (Sir D. Meek's Evidence before the Royal Commission of Agriculture, *Evidence*, Vol. 1, Part II, p. 358.) The only confirmation lay in a scientific system of crop-cutting experiments which could get rid of all subjective elements in crop-estimation. Through the courtesy of the Statistical Adviser of the Imperial (now Indian) Council of Agricultural Research and the Indian Statistical Institute I have been able to get the results of crop-cutting experiments by the random sampling methods undertaken by Sukhatme (U.P., Punjab, C.P., Sind, N.W.F.P., Bihar, Orissa, Bombay and Madras) and Mahalanobis (Bengal) (see Table 9). The results do not show a unilateral bias all over the country. Whatever the *Patwari's* mood the official statistics overestimate the yield of crop in U.P. The same appears to be true for the *Chowkidar* (the village policeman who is the primary agency in permanent settlement Provinces) in Bengal.* A greater fault, I believe, lies not with the *Patwaris* or *Chowkidars* but with the Directors of Agriculture, who in their offices maintain unscientific (and in many cases out-of-date) schedules of "normal" area and "normal" yields. Calculation roughly based on these corrected figures gives an all-India underestimation of 1·4 per cent. in case of wheat and 8·8 per cent. in case of rice. It certainly is not so large as one inferred from the indirect evidence available so far. The results, however, are not conclusive. The official statistics for the year 1945–6 are rather biased. In February, 1946 (when I had just reached India), the Food Department came out with a statement on the threat of an impending famine involving possibly even a breakdown of the rationing system. Thus every provincial unit was interested in stating as low an estimate of its out-turn as possible. How far that has affected official statistics of yield for the year 1945–6 will perhaps never be known. But from the above figures a tendency to that effect is noticeable, especially in respect of wheat, for which an acute shortage was feared. U.P. hastened to correct its usual over-estimation and ran close with the I.C.A.R. estimate. Under-estimation in the case of the Punjab (the only

* Sukhatme contends that Mahalanobis's experiments considerably overestimate the actual yield, as a result of the use of small size plots. If this is true, the overestimation in official statistics could show a still higher percentage.

CC-0. In Public Domain. Gurukul Kangri Collection, Haridwar

TABLE 9.—*Estimates of the yield per acre obtained from Crop-Cutting Experiments by random sampling and corresponding official estimates*

| *Crop* | *Province* | *Year* | *Number of Districts Covered by Experiments* | *Total Number of Experiments* | *Shape of the Sample Cut* | *Size of the Sample Cut* | *Estimated Yield per Acre in lbs.* | *Standard Error of Column 8 %* | *Corresponding Official Estimate in lbs.* | *Column 10 as per cent of Column 8* |
|---|---|---|---|---|---|---|---|---|---|---|
| (1) | (2) | (3) | (4) | (5) | (6) | (7) | (8) | (9) | (10) | (11) |
| Jute | Bengal | 1942 | 9 | 1,127 | Rectangle | 12′ × 12′ | 1,522 | 1·51 | n.a. | — |
| | | 1943 | 15 | 1,832 | ,, | 8′ × 8′ | 1,251 | 2·56 | 1,136 | 90·8 |
| | | 1944 | 25 | 300 | ,, | 10′ × 10′ | 1,267 | 4·03 | 1,465 | 115·6 |
| | | 1945 | 25 | 1,254 | Circle | $r = 5′ 8″$ | 1,234 | 2·20 | 1,251 | 101·4 |
| | | 1946 | 25 | 1,159 | ,, | ,, | 930 | n.a. | 1,210 | 130·1 |
| Wheat | Punjab | 1943–4 | 27 | 2,164 | Rectangle | 66′ × 33′ | 829 | 1·45 | 795 | 95·9 |
| | ,, | 1944–5 | 28 | 1,528 + 71 | ,, | 66′ × 33′ and 33′ × 16½′ | 917 | 1·83 | 867 | 94·5 |
| | | 1945–6 | 28 | 2,267 | ,, | 33′ × 16½′ | 851 | 1·88 | 709 | 83·3 |
| | U.P. | 1943–4 | 45 | 3,444 | ,, | 66′ × 33′ | 569 | 1·41 | 734 | 129·0 |
| | | 1944–5 | 46 | 3,081 | ,, | ,, | 681 | 1·76 | 750 | 110·1 |
| | | 1945–6 | 46 | 3,900 | =ℓ Triangle | 33′ side | 635 | n.a. | 639 | 100·6 |
| | C.P. and Berar | 1944–5 | 19 | 944 | Rectangle | 66′ × 33′ | 388 | 3·87 | 403 | 103·9 |
| | | 1945–6 | 19 | 1,434 | ,, | 33′ × 16½′ | 418 | 2·15 | 365 | 87·3 |
| | Sind | 1944–5 | 8 | 648 | ,, | 66′ × 33′ | 538 | 2·97 | 556 | 103·4 |
| | | 1945–6 | 8 | 1,013 | ,, | 33′ × 33′ | 696 | 2·44 | 675 | 97·0 |
| | N.W.F.P. | 1944–5 | 7 | 527 + 75 | ,, | 66′ × 33′ and 33′ × 16½′ | 619 | 3·39 | 547 | 88·4 |
| | | 1945–6 | 7 | 719 | ,, | 33′ × 16½′ | 586 | 4·44 | 526 | 89·8 |
| Autumn Rice | Bengal | 1944–5 | 25 | 430 | ,, | 10′ × 10′ | 773 | 4·15 | 732 | 94·7 |
| | | 1945–6 | 25 | 2,129 | Circle | $r = 5·8″$ | 617 | n.a. | 691 | 112·0 |
| | | 1946–7 | 25 | 2,584 | ,, | ,, | 576 | n.a. | 658 | 114·2 |
| | Bihar | 1945–6 | 6 | 414 | Rectangle | 33′ × 16½′ | 403 | 3·23 | n.a. | — |
| | | 1946–7 | 11 | 1,103 | ,, | ,, | 450 | 2·44 | n.a. | — |
| | Orissa | 1945–6 | 2 | 595 | ,, | 16½′ × 16½′ | 435 | 1·84 | 403 | 92·6 |
| | | 1946–7 | 3 | 452 | ,, | ,, | 412 | 2·43 | 480 | 116·5 |

CC-0. In Public Domain. Gurukul Kangri Collection, Haridwar
Digitized by Arya Samaj Foundation Chennai and eGangotri

TABLE 9 (cont.)

| *Crop* | *Province* | *Year* | *Number of Districts Covered by Experiments* | *Total Number of Experiments* | *Shape of the Sample Cut* | *Size of the Sample Cut* | *Estimated Yield per Acre in lbs.* | *Standard Error of Column 8 %* | *Corresponding Official Estimate in lbs.* | *Column 10 as per cent. of Column 8* |
|---|---|---|---|---|---|---|---|---|---|---|
| (1) | (2) | (3) | (4) | (5) | (6) | (7) | (8) | (9) | (10) | (11) |
| Winter Rice | Bengal | 1943–4 | 25 | 2,722 | Rectangle | 10′ × 10′ | 732 | 1·24 | 815 | 111·3 |
| | | 1944–5 | 25 | n.a. | Circle | $r = 5′\ 8″$ | 708 | 1·74 | 839 | 118·5 |
| | | 1945–6 | 25 | n.a. | n.a. | n.a. | n.a. | n.a. | 856 | — |
| | U.P. | 1945–6 | 35 | 3,434 | =$t$ Triangle | 33′ side | 530 | 1·51 | (576) | (108·7) |
| | | 1946–7 | 35 | n.a. | ,, | ,, | 487 | — | 513 | 105·3 |
| | Bihar | 1945–6 | 16 | 1,724 | Rectangle | 33′ × 16½′ | 712 | 1·26 | n.a. | — |
| | | 1946–7 | 13 | 1,691 | ,, | ,, | 726 | 1·52 | n.a. | — |
| | Orissa | 1944–5 | 6 | 1,188 | ,, | ,, | 743 | 1·75 | 551 | 74·2 |
| | | 1945–6 | 6 | 762 | ,, | 16½′ × 16½′ | 785 | 1·78 | 571 | 72·7 |
| | | 1946–7 | 6 | 859 | ,, | ,, | 700 | 2·14 | 579 | 82·7 |
| | Bombay | 1944–5 | 1 | 223 | ,, | 66′ × 16½′ | 1,080 | 3·33 | 1,043 | 96·6 |
| | | 1945–6 | 15 | 693 | ,, | 33′ × 33′ | 934 | 1·82 | 938 | 100·4 |
| | | | | +24 | ,, | 33′ × 16½′ | | | | |
| | | 1946–7 | 15 | 1,316 | ,, | 33′ × 16⅓′ | 938 | 1·60 | 835 | 89·0 |
| | C.P. | 1944–5 | 1 | 410 | ,, | 66′ × 33′ | 713 | 2·24 | 650 | 91·2 |
| | | 1945–6 | 10 | 882 | ,, | 33′ × 16½′ | 676 | 2·96 | 615 | 91·0 |
| | | 1946–7 | 10 | 2,051 | ,, | ,, | 638 | 1·72 | 518 | 81·2 |
| | Madras | 1944–5 | 1 | 395 | ,, | 66·× 33′ | 907 | 1·43 | n.a. | — |
| | | 1945–6 | 7 | 1,054 | ,, | 33′ × 13·2′ | 939 | 2·13 | 918 | 97·8 |
| | | 1946–7 | 14 | 2,189 | ,, | ,, | 950 | 1·47 | 1,003 | 105·6 |

*Note.*—1. Results for Bengal supplied by Indian Statistical Institute.
2. Results for all other Provinces supplied by the Statistical Adviser, Indian Council of Agricultural Research.
3. The yield of jute is in terms of dry fibre and of rice in terms of cleaned rice.

CC-0. In Public Domain. Gurukul Kangri Collection, Haridwar
Digitized by Arya Samaj Foundation Chennai and eGangotri

Digitized by Arya Samaj Foundation Chennai and eGangotri



province with a significant exportable surplus) increased from about 5 per cent. to 16 per cent. of its out-turn. Sind and the Central Provinces, which had over-estimated their out-turn the previous year by 3·4 and 3·9 per cent., underestimated this time by 3·0 and 12·7 per cent. respectively. N.W.F.P. continued to under-estimate its out-turn by about 10 per cent. If we therefore take out the results for 1945–6, we are left with the observations for a very short period to justify any definite conclusion on the direction or the magnitude of bias involved in the official statistics prepared by the usual methods before the war. (It also emerged from personal discussions that the comparison of I.C.A.R. estimates with official estimates was impaired by the fact that in many cases the former were available to the Provincial Governments before the issue of the final forecast, and thus the forecasts are not entirely independent of the results of crop-cutting experiments. It is not possible to gauge the influence of this factor, but it rules out consideration of any mark up or down on the pre-war official estimates on the basis of the results of these experiments.) And even as such the discrepancy is rather small. I have not felt justified, therefore, in tampering with the pre-war statistics of yield per acre. This is, of course, no approval of the guesswork that is involved in the preparation of agricultural statistics so far. The fact that not such a large unit as the country as a whole these guesses are not so wrong as was feared does for make them any more scientific. For any particular province they may be and often are very wrong.

5. Another product of irregular information is the estimation of crops sown in a mixed condition with other crops. The problem there is to ascertain the "net" or "effective" area under a particular crop and the yield. No standard methods are available for area estimation, and the figures are largely conjectural. Since most of the oilseeds are sown in a mixed condition, this factor seriously affects their acreage estimates. Thus "the estimates for the mixed crop in the United Provinces are highly conjectural" (footnote to the Table on linseed, rape and mustard and sesamum estimates) and are kept separate. Thus:

*Area under oilseeds*, 1937–8 (000 acres)

| *Crop.* | *United Provinces* | | *Total all India Crop excluding "mixed" crop in United Provinces* |
|---|---|---|---|
| | *"Pure" Crop* | *Mixed Crop* | |
| (1) | (2) | (3) | (4) |
| Linseed . . . | 2,480 | 632 | 3,258 |
| Rape and mustard . | 209 | 2,375 | 3,086 |
| Sesamum . . . | 368 | 955 | 3,495 |

For castor seed even this daring attempt is given up and the figures "exclude estimates for the mixed crop for which there are no reliable data at present." (See also Mahalanobis: *Sankhyā*, Vol. 7, Part 1, p. 66.) As regards yield, the general practice, I believe, is to multiply the total "net" acreage under the crop by the standard yield for the district, and then deflate it for the condition factor for the current year. This rests on an assumption that the output of a crop per unit of soil actually under the crop sown in a mixed condition would be the same as from an equal area in a field "purely" devoted to its cultivation. Mahalanobis in his Bihar inquiry observed that this was not the case, as thinner compositions gave proportionately higher yields, and that this was the probable reason for the popularity of mixed crops in Bihar. Thus the total yield of wheat was 4·32 maunds (1 maund = $82\frac{2}{7}$ lb.) per acre with only 1–2 anna (6·25 to 12·5 per cent.) proportion under wheat, while a field devoted to 15–16 anna (93·75—100 per cent.) to wheat gave an over-all total of 7·4 maunds per acre. Converting the net acreages in the sample into gross acreages for the districts and multiplying by rates of yield appropriate to different compositions, the total out-turn of wheat increased from 1,947 to 3,860 000 maunds for Shahabad and from 1,832 to 4,486 000 maunds for Monghyr districts, an increase of 123·7 and 108·6 per cent (*Sankhyā*, Vol. 7, Part 7, pp. 67–8). Mahalanobis himself does not attach much importance to these surprising results, as they were based on insufficient data. And we need not take this isolated example as conclusive, but it certainly points out the need for further studies on these lines. Work could be undertaken along with other area survey and crop-cutting work to determine (i) the actual effective area by studying the composition patterns of

CC-0. In Public Domain. Gurukul Kangri Collection, Haridwar

Digitized by Arya Samaj Foundation Chennai and eGangotri



mixed crops, and (ii) yield per unit of area for a crop under different compositions. On the basis of that alone accurate forecasting of crops in "mixed" sowings could be made.

*Appendix B.—Estimation of the consumer purchase of crops*

1. Notes in this Appendix examine factors relevant to estimation of consumer purchase (or retention), with particular reference to items 1–5 in Table 1.

2. Difficulties in connection with the estimation of gross village retention were considered in paragraphs 5.5 to 5.7. Net retention is obtained by deducting from gross retention quantities required for seed, for stock feeding, etc. Hardly any accurate information is available on the subject. The Food Department's publication adopts the omnibus figure of 12½ per cent. for each province and each cereal to allow for seed and wastage (*Food Statistics of India*, pp. 118–136). The seed rates, however, have a tendency to vary from place to place, depending on soils and methods of cultivation. And certainly they vary from crop to crop. The adoption of a uniform seed and wastage rate must seriously affect the Food Department's estimates of quantities available for procurement, and the error may be significant in case of an individual Province or State. (Their estimates of cereal consumption per capita in each trade bloc are also erroneous on this account.) *Marketing Reports* (and failing these Watt's *Dictionary*) are the only sources of estimates on seed requirements. The *Marketing Reports* take into consideration the character of soil and methods of cultivation in each region. An error, however, in the expression of the results of their inquiries (as given in some of the Reports) has been to give seed requirements as per cent. of production. The quantity required as seed in a year is not so much a function of the current harvest as of the area sown for the next year's crop. I have therefore taken the area sown in the following crop year, the seed requirements for which have been deducted from the current year's production. A uniform seed rate has been taken for all the ten years. This neglects the effect of changes in the methods of cultivation and in the quality of seeds on the quantity required per acre. On circumstantial evidence it seems that methods of cultivation have undergone very little change, but factors like the progress of irrigation, the provision of improved seed, bringing into cultivation of inferior lands, etc., might have affected the position considerably. Progress in irrigation and provision of improved seed might lead the seed rate to decline; on the other hand, the bringing into cultivation of inferior lands might bolster up the seed rate. On balance, the significance of these opposing forces is assumed to be small, and is accordingly neglected. Neither have I considered land which, being first sown with one crop and that crop having failed, was sown again with another crop and which is entered only under the second crop in official statistics.

3. Not all the quantities required for seed are obtained by retention. In some parts of the country, particularly in Bombay and Hyderabad, part of the seed requirements are met through purchase, and thus the total quantities of seed requirements have been broken down into (*a*) quantities obtained from retention and (*b*) quantities obtained through purchases on the market.

4. Cattle are mostly fed on fodder crops, which we have not taken into account as none enters human consumption. Where non-fodder crops are given to animals, it is mostly by-products and not grains. The only deductions made, therefore, are relatively small quantities of grains and pulses, which are used for stockfeeding in the same form in which they are consumed by human beings. These are barley, jowar, bajra and small millets, maize, ragi, and gram. Quantities (of barley and gram) obtained by retention and by purchase on the market were separately obtained from the *Marketing Reports*.

5. I have, however, refrained from making deductions on account of wastage. (1) We are primarily concerned with values that were paid by consumers (or could be imputed to them) when they purchased (or retained) a commodity with a view to ultimate consumption. Subsequent losses incurred by them, on account of rats in their houses for instance, are not allowed to reduce the value of consumer purchase. All losses from village retention are treated as consumer losses and hence neglected. (2) Losses in marketed supplies may occur in transit and in storage. In many cases, however, valuation has been at marks up above producers' (or import) prices, and since (foreseen) commercial losses are ultimately passed on to the consumers, I have neglected the offsetting operation of deducting quantities and proportionately raising prices in the price-mark up for the remaining quantities. In the case of commodities, however, where retail prices

CC-0. In Public Domain. Gurukul Kangri Collection, Haridwar

Digitized by Arya Samaj Foundation Chennai and eGangotri



were directly used for the valuation of consumer purchase (salt for instance), these losses were taken into account.

6. Since prices vary from province to province, estimation of consumer purchase on the market requires a consideration of both the trade within the country (interregional trade) and the foreign trade. An adequate treatment of the problems in this field requires a discussion of the geographical and commodity coverages of the various trade publications in India, and it would hardly be proper to go into a consideration of such details in the course of a paper of this type. The main problems are in connection with the estimation of (*a*) Land Frontier Trade, (*b*) Coastal Trade of British India Provinces with the Maritime States of Kathiawar and Travancore, (*c*) Foreign Trade with and via the French and Portuguese Possessions on the Indian Sea-board, and (*d*) "Foreign Trade" with Burma before 1937.

7. Quantities purchased or retained on farms for industrial and commercial purposes are treated as "unfinished" commodities, and these are excluded by definition (see Paragraph 1.2). Quantities used for seed and stock feeding may also be considered as "unfinished" items utilized in the production of "finished" soil and livestock products.

8. An important factor affecting the estimation of consumer purchase in a particular year is an increase of, or draft on, stocks. "As regards statistics of stocks, it must be frankly confessed that there are no statistics except for some of the agricultural crops like jute and cotton" (*Food Statistics of India*, p. 8), and sugar. We are told that with the introduction of rationing and monopoly procurement during war years a substantial portion of food grains has passed into the hands of the Government, and statistics for these could be available. A hope is also expressed that "with the return of conditions to normal, steps will be taken to obtain compulsory return of stocks of all food grains in the hands of traders. It would, however, be more difficult to get this done in the case of producers, and it would perhaps be necessary to make some kind of a reasonable estimate of the stocks in their hands." What is important is not so much the knowledge of gross volume of grains held by producers but the changes in it. I fail to see how the Food Department officials with their "reasonable estimates" are going to answer this need. If, for instance, they find that stocks of wheat in the hands of traders are increasing, are they going to assume that the producers also held large stocks or the reverse? In the meanwhile estimates for any particular year in this essay involve an uncertain magnitude of error owing to our failure to allow for changes in the annual carry over.

## *Appendix C.—Prices and valuation of cereals and pulses*

1. The basic set of prices for crops are the "Harvest Prices" in the *Season and Crop Reports*. *Agricultural Statistics*, Vol. 1, reproduces these and gives in an all-British India Table provincial prices which are median averages of the District prices. These "harvest prices" are a veritable chaos. This is obvious from the captions under which these prices appear in the provincial Season and Crop Reports. Punjab describes them simply as "prices," Bengal, Bihar, Orissa, U.P., N.W.F.P. and C.P. describe them as "harvest prices" or "prices at harvest time." C.P. under the general caption gives a sub-classification of wholesale and retail prices for each specific crop. The prices reproduced for C.P. in *Agricultural Statistics* are definitely stated in the *Season and Crop Reports* to be wholesale harvest prices. Assam gives these as "harvest prices in the four *wholesale* markets of Assam." Sind and Bombay describe their quotations as "*retail* prices (prevailing at harvest time) at the headquarters station of each district." Madras in its reference to rice, jowar, bajra and ragi prices describes these as "harvest prices based on the average of the *retail* prices reported by collectors as prevailing in two or three of the principal markets in each district." In all cases these are prices collected in town markets and averaged for the period—usually of 8 to 12 weeks during which the harvested produce is sold. These are thus "prices during the harvesting period" or "harvest prices." They are not prices at the *place* of harvest, but at the *time* of the marketing of harvest.

2. The official publication of median averages as the provincial prices is supported by the *Guide to Current Official Statistics* (third ed., pp. 37–8) on the ground that the medians are not seriously affected by the outlying values, and these outlying values are explained as due to the failure of *taluk* (subdivision of a district) officials entrusted with the work of collecting prices to bestow sufficient attention on the matter. I do not agree with this observation. Outlying

CC-0. In Public Domain. Gurukul Kangri Collection, Haridwar

Digitized by Arya Samaj Foundation Chennai and eGangotri



quotations have very rarely been due to faulty reporting or printing, and this could be easily corrected by comparing these with prices for other years. There are, of course, a few instances where prices from year to year have remained the same (e.g. barley in the District of Monghyr in Bihar sold uniformly at a "harvest price" of Rs. 2/8 per maund over the entire period). But such consistent misreporting does not necessarily occur in the case of outlying values. My experience with district prices of food-grains for these ten years has suggested two reasons for disparity. First, there are differences in quality. Thus surat in Bombay always shows high prices for rice, because a special quality called *Kalama* rice is produced there. Secondly, price differences within a province are the reflection of intra-provincial disparity in the conditions of market supply in the same way as price differences between the provinces. Valuation of total provincial output at median average price involves overestimation, as districts with large production have lower prices, and districts with small production have higher prices. Quality distribution may tend to aggravate or offset the error. The basis of valuation, therefore, has to be the district, and the production of each province has to be valued at the weighted arithmetic means of district prices and not the medians.

3. In order to obtain "a better indication of the prices which the cultivator actually receives for his crop than is obtainable from the records of prices that are now available" a new series of harvest prices was started in the *Indian Trade Journal* from August 6, 1936. These quotations are based on the information collected through non-official agencies (branches of the Imperial Bank and Messrs. Ralli Brothers). These prices are claimed to "represent the nearest approximation that (it) is at present practicable to obtain." But the representativeness suffers a little, as "the choice of centres has been restricted by the difficulty of securing reliable agencies for reporting prices." (Quotations from the Introductory Note to the Series in the *Indian Trade Journal* of August 6, 1936.) The snag about this price series is that it is scattered over the issues of the *Indian Trade Journal* and gives prices in terms of local units, which vary from province to province, from place to place in a province like Madras, and even from year to year for the same centre. Reducing them to a common unit is a labour which the publishers of the *Indian Trade Journal* (D.G.C.I.S.) could easily save, thus improving the usefulness of the publication for purposes of comparison of prices as between centres or as between different publications.

4. A sample of 512 quotations of prices of cereals and pulses (over a period of 5 crop years from 1935–6 onwards) was compared with corresponding quotations in *Season and Crop Reports*. To secure comparability the *Indian Trade Journal* quotations were reduced to (*a*) a common unit of weight, (*b*) a common unit of price quotation, and (*c*) common centres. Since each pair was closely associated only differences (in annas per maund) were considered, and the means of these differences and their standard errors were calculated (see Table 10). Section A (1 to 14) gives crop distribution of these differences for (i) All Provinces except Bombay, Sind and Madras (1 to 8) and (ii) Bombay, Sind and Madras (9 to 14). The latter give us retail prices in *Season and Crop Reports*, and should show a higher mean difference than the former, which give the difference between two sets of wholesale price. This proved broadly true (see 8 and 14). At 5 per cent. level of significance 8 is not significant, but 14 is. Taking the crops individually we get very large standard errors, and the difference is insignificant except for 3, 12 and 13. The result, 10, is curious. The retail prices are almost identical with wholesale prices. Since the collecting agencies are not segregated in terms of crops but in terms of Provinces, Section B (15 to 25) was prepared to see if a provincial breakdown shows up better. Since price levels vary, we assume that whatever the bias it is uniform per maund, and does not vary proportionately to the level of prices. This is broadly true. The three retail price provinces (23 to 25) all show a mean difference of about 2 annas. Of the wholesale price Provinces N.W.F.P. (20), C.P. (22) (and possibly Assam (15)) have their harvest prices in *Season and Crop Reports* underestimated (Assam has no *Season and Crop Report*, but it gives relevant statistics in the provincial *Agricultural Statistics*); the rest overestimate their prices in relation to those reported by the branches of the Imperial Bank. The overestimation in the case of Bihar (17) and U.P. (19) (and possibly Orissa (18)) does not compare unfavourably with Bombay, Sind and Madras (23–25), and one really wonders whether this is due to overestimation of wholesale harvest prices or whether these are in fact retail prices, as in Bombay, Sind and Madras.

5. There are no statistical tests which can tell us which of the two series is reliable or otherwise. If we take the D.G.C.I.S. at his word, we must adjust the values obtained on the basis of

CC-0. In Public Domain. Gurukul Kangri Collection, Haridwar

Digitized by Arya Samaj Foundation Chennai and eGangotri



TABLE 10.—*Mean difference between harvest prices in Season and Crop Reports and in the Indian Trade Journal, 1935-6 to 1939-40*

*Note.*—A negative sign indicates excess of *Indian Trade Journal* prices over corresponding Season and Crop Report prices.

| *Item* | *Crop or Province* | *Mean of Differences (Annas)* | *Standard Error of Column 3 (Annas)* | *Degrees of Freedom* | *Column 3/ Column 4* | *Probability* |
|---|---|---|---|---|---|---|
| | | *M* | σ | *N* | *T* | *P* |
| (1) | (2) | (3) | (4) | (5) | (6) | (7) |
| | *A. Crop Distribution* | | | | | |
| | (i) Assam, Bengal, Bihar, Orissa, U.P., Punjab, N.W.F.P., and C.P. | | | | | |
| 1. | Rice | — 1·1833 | 1·398 | 59 | — ·85 | ·4 —·3 |
| 2. | Wheat | ·6163 | ·630 | 85 | ·98 | ·3 —·2 |
| 3. | Jowar | 2·8750 | 1·035 | 23 | 2·78 | ·01—·001 |
| 4. | Bajra | 1·7059 | 1·211 | 16 | 1·41 | ·2 —·1 |
| 5. | Barley | 1·2381 | ·709 | 41 | 1·75 | ·1 —·05 |
| 6. | Maize | 1·1250 | ·771 | 31 | 1·46 | ·2 —·1 |
| 7. | Gram | ·4444 | ·416 | 53 | 1·07 | ·2 —·1 |
| 8. | All crops | ·6095 | ·364 | 314 | 1·67 | ·1 —·05 |
| | (ii) Bombay, Sind and Madras. | | | | | |
| 9. | Rice | 2·3750 | 1·763 | 55 | 1·35 | ·2 —·1 |
| 10. | Wheat | ·4333 | 1·352 | 29 | ·32 | ·8 —·7 |
| 11. | Jowar | 1·0727 | ·719 | 54 | 1·49 | ·2 —·1 |
| 12. | Bajra | 3·1951 | ·912 | 40 | 3·50 | —·001 |
| 13. | Gram | 5·4666 | 2·099 | 14 | 2·60 | ·02—·01 |
| 14. | All crops | 2·1218 | ·631 | 196 | 3·36 | —·001 |
| | *B. Provincial Distribution* | | | | | |
| 15. | Assam | — ·7143 | * | 6 | * | * |
| 16. | Bengal | ·4667 | 2·890 | 14 | ·16 | 1·0 —·9 |
| 17. | Bihar | 2·1351 | 1·284 | 36 | 1·66 | ·1 —·05 |
| 18. | Orissa | 6·2000 | * | 4 | * | * |
| 19. | U.P. | 1·5699 | ·745 | 92 | 2·11 | ·05—·02 |
| 20. | N.W.F.P. | — ·4643 | ·410 | 83 | — 1·13 | ·2 —·1 |
| 21. | Punjab | ·4750 | ·565 | 39 | ·84 | ·4 —·3 |
| 22. | C.P. | — 1·3529 | 1·230 | 33 | — 1·10 | ·3 —·2 |
| 23. | Sind | 2·3714 | 1·470 | 34 | 1·47 | ·2 —·1 |
| 24. | Bombay | 1·8666 | 1·560 | 74 | 1·56 | ·2 —·1 |
| 25. | Madras | 2·2414 | 2·950 | 86 | 2·95 | ·01—·001 |

* Omitted as the size of the sample is too small.

prices in the *Season and Crop Reports*. Giving weightage to these provincial means of differences on the basis of the "net" retained and marketed crops (in the year 1937–8), it was found that valuation at prices in the *Season and Crop Reports* involved an upward bias of 2·05 ± 1·1 per cent. for village retention and 2·2 ± 1·4 per cent. for marketed surplus.

6. For a proper valuation weights should be based on actual quantities retained or marketed in each district. We only know the provincial over-all proportion (of its production) that is retained or marketed. Since the ratio out-turn/rural population varies from district to district we cannot assume that the proportions of village retention and marketed balances in each district are the same as the over-all proportion for the province. (This argument is based on assumptions (*a*) that the entire rural population of a province consists of producers and workers receiving wages in kind; (*b*) that this rural population first keeps all the supplies it wants for its own consumption; and (*c*) that there is a homogeneous consumption per capita of rural population all over the province. The proportion marketed in any district would hence be a function of the ratio out-turn/rural population of the district.) As it happens we have to assume a decreasing proportion of retention (alternatively an increasing proportion of the marketed balance) with increasing output and lower prices, and an increasing proportion with lower output and higher

CC-0. In Public Domain. Gurukul Kangri Collection, Haridwar

Digitized by Arya Samaj Foundation Chennai and eGangotri



prices. In valuing at the means weighted on the basis of production we are underestimating the value of village retention owing to higher proportions being retained in the villages in higher price districts. Alternatively we are overestimating the value of marketed balances.

7. The upward bias of about 2 per cent. in valuation at *Season and Crop Report* prices is assumed to offset this underestimation of the value of village retention. In the case of the value of marketed surplus, however, the errors are additive, and I have adopted an arbitrary mark down of 5 per cent. to correct for overestimation on both these accounts.

8. Net values of village retention available for human consumption are obtained by deducting market charges borne by the seller and his transport costs. These are obtained from various *Marketing Reports* and miscellaneous publications on the marketing of wheat in the Punjab and U.P. The logical difficulties (discussed in Paragraphs 5.2 to 5.4) are left unsolved.

9. In connection with the valuation of marketed supplies the annual averages of urban retail prices as available in the *Statistical Abstract* (all provinces), *Labour Gazettes* and *Cost of Living* Publications (Bombay and the Punjab), and *Season and Crop Reports* (C.P. and Madras), were compared with the harvest prices in the Season and Crop Reports for corresponding centres and seasons after adjusting for time lags. Bombay, Madras and Sind "harvest prices" (being retail prices) only checked up against these annual "retail prices" and the discrepancy was insignificant. In the case of C.P., of the 727 prices examined for the ten years, no less than 120 retail prices actually fell below corresponding wholesale prices. (Both appear under the same date.) The discrepancy was significant only in the case of 5 years out of 10. U.P. harvest prices showed no significant difference from the retail prices. This is another pointer that the "harvest prices" in U.P. are possibly retail prices, though it may be that the retail prices (in the *Statistical Abstract*) have a downward bias. Bihar did not give a fit at all. Only one pair of comparable quotations is available for Assam, Orissa and N.W.F.P., and these had to be excluded. Punjab and Bengal alone gave plausible results. On the over-all results of these comparisons for different crops it was finally decided to give up the retail prices. Instead, final values of consumer purchase were obtained by adding up the value contribution of transport and distributive agencies.

10. These included: (1) Market charges borne by the buyers. Information on these was obtained from the sources mentioned above in paragraph 8. (2) Gross railway freight on traffic on Class I Railways was obtained from the *Annual Administration Reports* of the Railway Board. Freight on Class II and III Railways was ascertained on the basis of the ratio of total goods revenue of Class I Railways to that of Class II and III Railways (about 2·8 to 3·0 per cent.) (3) Handling and station charges are taken from the *Marketing Reports*. (4) The volume of intra- and inter-provincial Coasting Trade was obtained on the basis of the Coasting Trade statistics, the main problems being the ascertaining of and including the trade with non-Customs ports within the Province and with the maritime states of Kathiawar and Travancore, and excluding the trade with Burma, which was registered as Coasting Trade before 1937–8. (5) F.o.b. values of exports and c.i.f. values of imports are directly available. But Burma trade before 1937–8 requires adjustment. As registered in the Coasting Trade we get c.i.f. values of imports into Burma, for which, being Indian exports, we want f.o.b. values. On the other hand, we get only the f.o.b. values of Indian imports from Burma. Ascertaining and adding the freight and insurance to the latter, and deducting these from the former was achieved with the help of the *Marketing Reports* and Shipping Directories, which were also helpful in ascertaining the wharfage and port charges. (6) The Customs levies were obtained from the *Combined Financial Accounts of the Revenue and the Expenditure of the Central and the Provincial Governments* issued by the Central Board of Revenue. If these were not available for any individual item Customs Manuals giving rate schedules were resorted to. (7) The Land Frontier Trade is available only in quantities, which were valued at the prices ruling in the Frontier Districts. (8) Of the total market supplies—equal to the sales of the producers plus imports—only a small proportion (approximately 20 per cent. for rice, 35 per cent. for wheat, 20 per cent. for jowar and bajra, 40 per cent. for gram and pulse and 30 per cent. for other sorts) involves movement by rail or sea. The rest is moved by roads and rivers, and we have only scattered data in respect of these. (9) Similarly the only source of information on distributive margins is the series of *Marketing Reports*. These do not give us continuous data over a number of years or for a large number of centres. We only get a few specific instances of movements and price-spreads of "typical" consignments at or about the time of the publication of the *Reports*. Thus where the data are used from that source value adjust-

CC-0. In Public Domain. Gurukul Kangri Collection, Haridwar

Digitized by Arya Samaj Foundation Chennai and eGangotri



ments (based on arbitrary indices of windfall gains or losses resulting from price changes) are arbitrary, and have been allocated to the category of conjectures in Table 3.

*Appendix D.—Notes on Individual Items in Table 1*

Important points in connection with agricultural statistics have been dealt with in previous Appendices. The following short notes are intended to indicate only the coverage and specific sources in respect of individual items (listed in brackets) in Table 1:

1. *Report on the Marketing of Rice in India and Burma* (1941). Rice, Rice Flour and other rice products such as parched paddy, beaten rice and parched rice were separately valued.

2. *Report on the Marketing of Wheat in India* (1937). A mark up was added on the value of wheat to give the value of flour and its various products.

3. There are no *Marketing Reports*, and estimates of retention and stockfeeding are arbitrary. Seed rates were obtained from the *Dictionary of Economic Products* by Sir George Watt.

4. Gram and its various products, dal, baisin, ata, etc., were valued on the basis of the *Report on the Marketing of Gram in India* (1945). Pulses were valued on the basis of ratios of gram and pulse prices in the Coasting and Export Trade statistics.

5. Includes barley, maize, ragi, small millets, other food grains and unclassified pulses, and "miscellaneous foodcrops." *Report on the Marketing of Barley in India* (1945). Barley Products, such as sattu, etc., were valued on basis of the *Marketing Report*. Barley flour, being too coarse, is hardly sold as such for direct consumption, but is mainly produced for adulteration with wheat flour. The quantities estimated by the *Marketing Report* are very large: 90,000 tons by roller mills alone, and to this has to be added the quantities mixed by shopkeepers. The barley flour thus sold may involve a very high mark-up from the point of view of money spent by the consumers, but this involves fraud, and the resultant excess of exchange value paid by the consumer is taken as a transfer, and hence is not included in the total value of consumer purchase. A different point of view is given in a comment of Mr. C. F. Carter, who writes, "I note that frauds are treated as transfers. It is very difficult to draw the line. It is universally understood in France that if you haven't a bread coupon you must pay a higher price for your bread. Is this a fraud or a social custom? To adulterate wheat may be illegal; but if the consumer knows well that it happens and that he is powerless to prevent it, is not the price he pays properly a part of the value? To argue otherwise suggests that there is some standard of absolute value apart from the custom of the market."

6–7. *Report on the Marketing of Sheep and Goats in India* (1945), and *Report on the Marketing of Cattle in India* (1946). Numbers based on the *Livestock Censuses of India* : 1930, 1935 and 1940. Meat Yields were obtained on the basis of the *Marketing Reports*. Prices—retail prices—from the *Bombay Labour Gazette*, *Cost of Living Indexes* for the Punjab issued by the Board of Economic Inquiry (since 1936) and the *Marketing Reports*.

8 and 16. *Report on the Marketing of Eggs in India and Burma* (1938), and the *Livestock Census* of 1940.

9. Bacon, ham, rabbits and birds. A guess: 10 per cent. of 6–8.

10. *Report on the Marketing of Fish in India* (1946). Includes canned fish.

11, 12 and 15. *Report on the Marketing of Milk in India and Burma* (two editions, 1941 and 1943). Additional sources for prices: Punjab Board of Economic Inquiry *Cost of Living* Publications from 1936 onwards and the *Bombay Labour Gazette*. The Groups consist of fluid milk, butter, ghee, khoa, cream, ice cream, cheese, etc.

13. *Report on the Marketing of Coconuts and Coconut Products in India* (1944). Coconuts include tender and mature nuts, and the products are copra and coconut oil. Linseed oil—estimates based on the *Report on the Marketing of Linseed in India* (1938). Groundnut oil and nuts in shell based on the *Report on the Marketing of Groundnuts in India and Burma* (1941). The Group also includes rape, mustard and sesame oils. Additional data on prices from the *Statistical Abstract*. No attempt was made to estimate the quantity production of the reported acreage under "other oilseeds." These were valued at a uniform rate per acre under cultivation. The values also include imports of cod liver oil and lard.

14. *Report on the Marketing of Sugar* (*including the various kinds of Gur and white sugar*) (1943). Includes sugar cane consumed as cane and juice, gur, khand and various other kinds of



CC-0. In Public Domain. Gurukul Kangri Collection, Haridwar

Digitized by Arya Samaj Foundation Chennai and eGangotri



sugar. Also includes palm and molassein products, viz. palm gur and molassein gur and sugar made from these gurs. Accounts of imported and home produced crystalline factory sugar were kept separate. The *Reviews of the Sugar Industry in India* issued as annual supplements to *Indian Trade Journal* and M. P. Gandhi's *Annuals* were used as additional sources. No data are available in respect of honey, and the estimates are guesses. The group also includes values of imports of confectionery, jams and jellies and saccharin.

17. *Reports on the Marketing of Potatoes* (1941), *Citrus Fruits* (1943), *Bananas* (1945), *Grapes* (1940), *Cashewnuts* (1944). Other fruits and vegetables were valued on the basis of acreage returns, except onions, data for the prices of which were available in the *Bombay Labour Gazette*. *The Food Statistics* (Statement No. XCVII, p. 169) gives production and acreage for an unspecified year. I believe it is a jumble, since information available for different years is all put in the same column. A flat addition of Rs. 10 million was made to allow for canned fruits, and other manufactured products, such as squashes, cordials, etc.

18. Information in connection with production was specially obtained from the Central Board of Revenue in the Department of Finance, Government of India.

19. Acreage under spices was valued at the same rate as acreage under 17.

20. Statements on Salt in the *Statistical Abstract* of British India, in *Indian Trade Journal*, *Annual Administration Reports of the Northern India Salt Revenue Departments* and Aggarwal: *The Salt Industry in India* (1935). The estimates also include domestic chemicals—alum and sodium bicarbonate.

21. *Indian Tea Statistics* issued annually by D.G.C.I.S. Retail prices from the *Bombay Labour Gazette*.

22. *Indian Coffee Statistics* issued annually by D.G.C.I.S. and *Report on the Marketing Report of Coffee* (1940). Values also include cocoa and chocolate.

23. Includes imported canned goods other than fish and fruits, "other patent foods," isinglass and "other provisions"—in fact, all that could not be conveniently placed under any of the above groups.

24. A guess based on per family expenditure in urban and rural areas.

25–28. *Excise Administration Reports* issued by each Provincial Excise Department, and *Memoranda* issued by the Central Board of Revenue on (1) Intoxicating Liquors, (2) Opium, (3) Hemp Drugs and (4) Cocaine. The figures were checked with revenues from taxation as given in the *Combined Financial Accounts of Revenue and Expenditure of Central and Provincial Governments*. Prices of home-produced "foreign liquors" were obtained in response to a circular to breweries, distilleries and distributors. Valuation was separately obtained for country spirits, country fermented liquors, home-produced and imported (i) malt liquors, (ii) spirits and (iii) wines (all imported), opium, ganja, bhang, charas, morphia and cocaine.

29–32. *Report on the Marketing of Tobacco in India and Burma* (1939). Item 32 (snuff, chewing tobacco, etc.) was obtained as a residual after production of 29–31 and exports had been deducted.

33. *Report of the Fact-Finding Committee* (*Handlooms and Mills*) (1942) and *Reports* of the Tariff Board Inquiries (1927, 1932, 1936 and 1947) into the *Grant of Protection to the Cotton Textile Industry*. Hand-spun yarn estimated based on observations of the Fact-Finding Committee. Available supplies of yarn were allocated between its various uses: Production of Cloth in Textile Mills and in small powerloom units; hosiery; rope and twine; thread; braids; miscellaneous products such as tape, ribbon, etc., and for fishing nets, and in the manufacture of jute products. The residual was estimated to have been used for production on handlooms. Production of cloth in factories was obtained from *The Monthly Statistics of Cotton Spinning and Weaving in India*. Production of textiles and consumption of yarn in other establishments were obtained on the basis of the Fact-Finding Committee's *Report*. The historical controversy of the ratio of yarn to "yards" of handloom cloth was examined in light of specifications of various samples (85 in all) given in the 1932 Tariff Board *Report* and in the Fact-Finding Committee *Report*, and a tentative conclusion was reached that the ratios of a lb. of yarn to cloth would be 5·0779 "yards" (of varying width) or 5·6651 square yards, and not 4 "yards" as is commonly taken. The same sources were used for calculating price per square yard of handloom cloth in coarse, medium and fine counts. Prices for factory cloth were obtained on the basis of the Bombay Millowners' Association Reports (giving ex-Mill prices), Export and Coasting Trade

CC-0. In Public Domain. Gurukul Kangri Collection, Haridwar

Digitized by Arya Samaj Foundation Chennai and eGangotri



Prices (wholesale prices) and *Bombay Labour Gazette* prices (Retail prices). The value of Government purchase was obtained from the *Annual Administration Reports of the Indian Stores Department*.

34. Two Tariff Board *Reports* (1933 and 1940) were used to estimate production. Prices (in 1933) per square yard calculated from specifications given in the First Tariff Board *Report*. Export prices were used to obtain an index over the period.

35. Production and prices based on foreign trade statistics.

36. *Report on the Marketing of Wool and Hair in India* (1946) and *Report of the Tariff Board on the Woollen Textile Industry* (1935). Products of Merino wool were valued at an arbitrary index. Products from Indian and Tibetan wools were valued on the basis of the weighted means of export prices of blankets, carpets and shawls.

37. Mixtures include only mixtures produced in Textile Mills. Those produced on handlooms could not be separately obtained. Values of these in proportion to their yarn content are included in 33–36 above.

38. Coir Mats and Matting. Production on the basis of the *Report on the Marketing of Coconuts and Coconut Products in India* (1944). Prices on the basis of export values. Hair on the basis of the *Report on the Marketing of Wool and Hair in India* (1946).

39. Production estimates based on the *Reports on the Marketing of Hides in India and Burma and on the Marketing of Skins in India and Burma* (1943). Prices on the basis of Export values.

40. Rental value of urban property in British India based on the ratios of "tax on houses" to assessed rental value. Sources: Provincial *Reports on the Working of Municipalities*, and *Corporation Reports* for Bombay, Calcutta and Madras. The estimates certainly have a downward bias, due to understatement of taxable values. Imputation of value to rural huts is arbitrary.

41. Apart from sources mentioned in 40 an additional source is the *Statistical Abstract*.

42. Various estimates on the consumer use of the production. One by the Advisory Board of the Imperial Council of Agricultural Research: *Memorandum on the Development of Agriculture and Animal Husbandry* (1944). *Report on the Marketing of Cattle in India* (1946). Values are arbitrary.

43. *Administration Reports* (Provincial and Central) of the Forest Departments. Information collected in the course of the Firewood and Charcoal Control Order (1944) was examined on the consumption side. Prices based on the sale prices of the Forest Department, wholesale prices in the Coasting Trade and retail prices in the *Bombay Labour Gazette*.

44. Estimates of consumption from the *Statistical Abstract*. Prices from the *Bombay Labour Gazette*.

45. Estimates since 1939 from *Public Electricity Supply: All-India Statistics*, 1939–43 (1946). Domestic consumption separately classified for (i) Light and Fans and (ii) Heat and Power. Index of consumption based on the data obtained for 23 cities and towns in reply to a questionnaire sent to 524 undertakings. Gross revenue rates per unit and meter rent were obtained from 19 firms out of 23 who supplied information on consumption.

46. Castor oil, coconut oil, "other vegetable" oils and gas. Estimates largely arbitrary.

47. Estimates are largely arbitrary. Includes steel furniture, safes and clocks.

48. Estimates arbitrary, except in the case of imported products like wireless sets, gramophones, and accessories like valves, pick-ups, etc.

49. Arbitrary.

50. Arbitrary. Includes imports of Chinese and Japanese ware. Glassware estimated on the basis of the *Report* of the Tariff Board (1932); Dixon, *Survey of the Indian Glass Industry* (1936); and the *Report of the Panel on Glass Industries* (1947). Estimates also based on the consumption of soda ash.

51. *Records of the Geological Survey of India*, and Dr. P. J. Thomas, *Report on Metallurgical and Engineering Industries* (1944 unpublished), and *Report of the Panel on Non-Ferrous Metal Industries* (1947). Includes utensils of copper, brass, bronze, bell metal, aluminium and german silver. It also includes consumer purchase of tin for coating copper and brass utensils. Prices were confidentially supplied by the Non-Ferrous Metals Directorate. Values of hardware and cutlery are rather arbitrary, based on the observations in Dr. Thomas's above mentioned *Report* and another *Report on the Development of War Industries* (1945, also unpublished).

CC-0. In Public Domain. Gurukul Kangri Collection, Haridwar

Digitized by Arya Samaj Foundation Chennai and eGangotri



52. Lanterns and Lamps: *Report on Metallurgical and Engineering Industries.* Electric Bulbs: imports from sea-borne Foreign Trade Statistics and home-production on the basis of Dr. Thomas's observations. Value of Government Purchase from the *Administration Reports* of the Indian Stores Department.

53. Includes fans, bell apparatus, refrigerators and a percentage of accessories.

54. Includes machines purchased by tailors.

55. Production since 1934–5 available in the *Statistical Abstract.* Report of the Tariff Board (1928). Prices from the *Bombay Labour Gazette.*

56. Note in the *Report on the Marketing of Coconuts and Coconut Products* (pp. 197–8). An alternative estimate based on caustic soda consumption from the *Report of the Panel on Heavy Chemical Industry* (1947), and Dr. Thomas, *Development of War Industries.* Prices on the basis of the Coasting Trade and Export Statistics. The Group also includes the consumer purchase of washing soda.

57. Arbitrary.

58. Includes brushes, except tooth brushes, coir ropes, candles, torches, including bulbs, and nightlights, metal polishes, ammonia, camphor and saffron. Imports account for a large part of the consumer purchase.

59. Suitcases, wallets and ladies' handbags, satchels and other leather goods—as in 39. Bangles, beads and glass pearls as in 50. Umbrellas—based on arbitrary assumptions of purchases per family. Toys and sport requisites—mostly guesses. Stationery and writing materials—Production in the *Statistical Abstract.* Also the *Report of the Panel on Paper Industry* (1945, unpublished). The group also includes portable typewriters, optical glasses, photographic instruments, cycles, watches, toothbrushes, perambulators, buttons, bangles of lac, hair oils (particularly coconut oil), sandalwood oil and perfumes.

60. Taxed entertainment on the basis of the Entertainments Tax Receipts. Untaxed entertainment arbitrary. The group also includes fireworks.

61. Information on the number of newspapers, periodicals, and books in (i) English and (ii) Indian Languages from the *Statistical Abstract.* Prices arbitrary.

62. Number of motor cars and motor cycles from the *Statistical Abstract.* Running expenses arbitrary. Also includes an arbitrary allowance for horsedrawn vehicles.

63. *Annual Administration Reports* of the Railway Board.

64. Suburban Railways from *Annual Administration Reports* of the Railway Board. Tramways and Bus Traffic receipts on the basis of the information received from relevant companies for Bombay, Delhi, Calcutta and Madras.

65 and 66. *Administration Reports* of the Post and Telegraphs Departments. Deduction for Burma prior to 1937–8 arbitrary, as these publications do not provide Provincial figures of revenue. Railway telegraphic revenue from the *Administration Reports* of the Railway Board.

67. The *Statistical Abstract.*

68–79. Mostly arbitrary except 69. The last occupational census was for 1931. No data on numbers actually employed. Nor much by way of data on wages and earnings. During the period of our inquiry there have been the Fifth (August, 1934) and Sixth (August, 1939) Wage Censuses in U.P., Fifth (December, 1932) and Sixth (December, 1937) Censuses in the Punjab, and two Censuses (August, 1932 and August, 1935) in Coorg. Bombay in its *Labour Gazette* gives wages of agricultural and moffusil non-factory workers in each of the four Divisions over the entire period. I have used 1931 Census figures to get an approximate idea of the numbers involved. Estimates of employment and earnings are more or less arbitrary. The wage figures in the various censuses were used to obtain the average level, and Bombay figures are used for index purposes.

69. Estimates based on the *Statistical Abstract* and the Reports on *The Progress of Education in India*, published by the Bureau of Education.

76. Compared with the 1921 Census ("Actual Workers") we get a tremendous increase of 8·3 million workers under this group in 1931 ("Principal Earners and Working Dependants") excluding Burma. Of this, 7·2 millions are accounted for by the Madras Presidency and Madras States (including Cochin and Travancore) alone. Actually, most other provinces showed a decline, and increases in the case of Bengal, Bombay, N.W.F.P., U.P. and Hyderabad were small. In the case of Madras and Madras States (including Cochin and Travancore) the number increased from

CC-0. In Public Domain. Gurukul Kangri Collection, Haridwar

Digitized by Arya Samaj Foundation Chennai and eGangotri



107,000 to 7,349,000. The reason probably was that the enumerators in the Madras Presidency were instructed that "housekeeping might be entered among the occupations of dependants" (*Census Report* for Madras, 1931, p. 194). As a result "women who in all probability did housework in their own houses were mistaken for domestic servants who work in other people's houses for a regular wage" (B. G. Ghate, *Changes in the Occupational Distribution of the Population* (1940), p. 10). As a result of adjustments the total number of workers under domestic service was reduced from 12,557 000, to 6,057 000.

79. Includes receipts from wireless licences, and repairs to wireless sets and other electrical goods. Net incomes from the sale of secondhand goods including motor cars, stamp duty and payments for legal services in connection with transfer of property, money order receipts of the Post Offices, expenses of management incurred by insurance companies, by banks on current account transactions and trade union subscriptions.

80. Population numbered 338,119 000 and 388,977 000 in the last week of March, 1931 and 1941 respectively. Population at the end of each of the intervening Census Years was obtained by fitting an ordinary exponential curve. Mid-Year populations are the running averages of two successive Census Year populations. This slightly overestimates the actual mid-Year populations, but the errors are negligible, and do not affect the calculations for which these population deflators are used.

*Appendix E.—Comparison with the estimate of national income*

1. Consumer expenditure at current values in these estimates works out at Rs. 82·5 per capita in 1931–2. Rao arrived at a national income figure of Rs. 65 per capita for the same year (*National Income of British India*, 1931–2 (1940), p. 186). Rao's figure refers to British India alone and includes Burma. Income per capita of population in Burma is estimated by him at Rs. 67·5 (p. 233). Income of British India excluding Burma would be lower than Rs. 65. Income of population in native states is also likely to be lower than in British India. Thus the national income of all-India (excluding Burma) would be lower than Rs. 65 per capita on the basis of Rao's figure.

2. Consumer expenditure falls short of national income by (*a*) government expenditure less indirect taxes and (*b*) net capital formation. We have no evidence that either of these was negative. National income figure on my reckoning therefore should have certainly been higher than Rs. 82·5, subject to its margins of error. I reckon, therefore, that Rao's figure is a considerable underestimate.

3. Rao assigns a maximum error of 6 per cent. to his total estimate. The presentation and calculation of errors, however, are faulty. I reproduce below the relevant portions (p. 186):

| | *Value in Millions of Rupees* | *Margin of Error Percentage* |
|---|---|---|
| Value of Agricultural Output | 5,927 | — |
| Incomes assessed to income tax | 2,161 | — |
| Grand Total | 16,890 | 6 |

He proceeds: "If we can infer that the official statistics of agricultural output as a whole were below the actual output by 10 per cent., and if we further assumed that evasion of income tax and the consequent understatement of incomes assessed to income tax was not less than 5 per cent. we get an alternative estimate of the income of British India," which is put at Rs. 17,664 millions, again "with a margin of error of 6 per cent." This take-what-you-like-you-will-be-subject-to-the-same-error attitude is indicative of some confusion. Re-stated, the value of error would be:

| | *Value in Millions of Rupees* | *Limiting Values of Errors* | |
|---|---|---|---|
| | | *Millions of Rupees* | *Percentage* |
| Value of Agricultural Output | 5,927 | 0 to 593 | 0 to 10 |
| Incomes assessed to income tax | 2,161 | 0 ,, 68 | 0 ,, 5 |
| Grand Total | 16,890 | −1,014 ,, 1,675 | −6 ,, 10 |

CC-0. In Public Domain. Gurukul Kangri Collection, Haridwar

Digitized by Arya Samaj Foundation Chennai and eGangotri



The correct limits are neither Rs. 15,876 and 17,904 millions nor Rs. 16,651 and Rs. 18,677 millions, but are wider. The true figure lies between Rs. 15,876 and 18,565 millions.

4. Not only the presentation, but the calculation of errors is faulty. His estimates of agricultural output, livestock products, fish, forest products and mineral produce are the products of quantities and average prices, and the rest, excluding incomes assessed to income tax, incomes of state employees and the value of miscellaneous items, are the products of estimated numbers of employed earners and their average earnings. In these cases errors in each of the two variables in the products are additive. Rao considers errors in one of the variables only. Thus in the case of values, errors indicate the reliability only of quantity estimation, and in the case of incomes, these refer to average wages alone. Errors in estimates of the prices in the former and the numbers in effective employment in the latter are neglected. Even where quantity estimates are products of more than one variable (e.g. yield of mutton is a product of estimated number of sheep slaughtered and average yield per sheep) errors assigned refer to only one of the variables (number of sheep slaughtered). In the quotation in paragraph 3 of this Appendix, Rao is concerned only with the errors in quantity estimated of agricultural output. Errors arising from the use of harvest prices have received no attention.* And to this extent assignment of errors in the estimates is inaccurate and an understatement.

5. Beyond this it is unprofitable to criticize the subjective element in the values assigned to errors in his estimates by a national income computor.

* *Note.*—I am particularly unhappy with Rao's valuation of agricultural output which he sets out with a note: "It is particularly important that we should use the figures of value at the *place* of production (italics mine), as a considerable proportion of the foodcrops is consumed by the cultivator himself and his family, while in many places the wages of agricultural labour are paid in kind" (p. 66). He values output, however, at provincial median averages of district harvest prices as reported in Vol. 1 of *Agricultural Statistics*, the only complaint being that these are not available for all crops or all provinces in the case of each crop. The values so obtained (as would be obvious from our account of harvest prices in Appendix C) are guilty of overestimation on various counts.

(1) Harvest prices are not prices at the place of production but in the urban markets, and cost of transport, therefore, has to be deducted.

(2) Harvest prices are not "net" prices received by the cultivators, who incur various marketing charges which also have to be deducted.

(3) Valuation at median averages of district prices, instead of their weighted means, leads to an overestimation of about 3 per cent. in cases of foodgrains. (I have not tested other crops.)

(4) Harvest prices are not even wholesale prices, and thus valuation for Bombay, Sind and Madras gives retail values and not values received by producers.

(5) Specific items such as breakdown of output of rice into autumn and winter rice would give again a lower value of output, as on balance autumn rice sells at a lower price then winter rice.

Apart from this the prices are generally recognized in India as unreliable. And still no error is assigned to the net value of agricultural output.

## Discussion on Mr. Desai's Paper

Mr. E. F. Jackson: I have much pleasure in congratulating Mr. Desai on his admirable paper and in moving a vote of thanks to him. That these congratulations are sincerely meant, Mr. Desai already knows, because I made them on an earlier occasion when I was bound by none of the obligations of formal politeness which custom imposes on the mover of a vote of thanks. Mr. Desai set himself a most ambitious task, and I think he has fulfilled it magnificently. Theseus's path to the Minotaur was not more difficult than Mr. Desai's path through the Indian statistical labyrinth, where nothing, on investigation, turns out to be quite what it seems, and Mr. Desai has picked his way with quite unusual confidence and care.

I have never been in India, and I have no direct acquaintance with Indian statistics. All that I can hope to do this evening, therefore, is to touch on a few of the points in Mr. Desai's paper that seem to me, as a fellow worker in the field of national income statistics, to be of some general interest.

It is a commonplace nowadays that there are three ways of approach open to the national income statistician. He can aim at measuring the net national product, by aggregating the net outputs of all the industries of the economy. The raw material of his calculations will, if he is fortunate, be thrown up by censuses of production, distribution and services. Or he can approach his objective from the side of income: that is, he will aggregate the incomes accruing to labour and capital and he may hope to find his raw material in income tax collectors' records and in

CC-0. In Public Domain. Gurukul Kangri Collection, Haridwar

Digitized by Arya Samaj Foundation Chennai and eGangotri



tabulations derived from censuses of wages and salaries. Thirdly, he can approach his objective from the side of expenditure: in this case he may hope to measure individuals' expenditure on consumer goods and services by sampling family budgets, government expenditure on goods and services by picking his way through the public accounts, private capital formation by sampling traders' (unpublished) accounts, and changes in the economy's net claims on foreign countries by studying statistics of visible and invisible trade with those countries.

These three approaches will, if the investigator lives in the statistician's Utopia that I have lightly sketched in, be completely independent of one another. But, because of the fundamental definitional equations—product, income, expenditure—all three approaches will give an identical answer unless, as of course will in fact happen, there is what Sir Thomas Browne, speaking of the age of the phoenix, describes as "a mistake in the compute." The highest authorities, therefore, recommend the investigator to adopt all three approaches, on the ground (among others) that scrutiny of the discrepancies between the three estimates thus obtained should make possible a refinement of the calculations and a gain in accuracy. This advice, though it has so far rarely been followed, seems to me admirable; there can be no doubt about the aids to clear thinking and the gain in interest given by the discipline of social accounting, which the tripartite approach implies. But it is worth noting, I think, that in the real world for a long time to come, estimates got by the three methods will be far from independent of one another. In Miss Phyllis Deane's recent book, for example, the estimates of expenditure for each of her three communities are largely based on estimates of output. The same is true of the official estimates for this country. Most of the British estimates of income are derived from income tax assessments and from the Ministry of Labour's sample earnings enquiries. But our estimates of farm profits are essentially a residual obtained by deducting estimates of farmers' expenses from estimates of the value of the output of British agriculture. Similarly, many of our estimates of consumers' expenditure are based, in the last resort, on estimates of the output of particular industries, and all of them are obtained by measuring traders' receipts from all sources and making rather arbitrary deductions to eliminate expenditure not made out of personal income. None of them, regrettably, is made by sampling family budgets.

The same lack of independence of estimates of output and of expenditure comes out very clearly in Mr. Desai's paper. Indeed, the most striking feature of his methods of estimating consumers' expenditure is their roundaboutness. To say this is not to criticize Mr. Desai: on the contrary, I could not sit down without mentioning my admiration of Mr. Desai's courage and consistency at the point when he discovered that so-called retail prices were not in fact retail prices, and was thus precluded from using a short cut. Faced with this situation most people would, I think, have attempted to use these prices, however defective they might appear, and I am not sure that I fully understand why Mr. Desai did not do so. But he preferred instead to calculate the value added to each crop at each stage of the production process and this laborious calculation is undoubtedly a most impressive piece of statistical detective work.

It does, however, follow that Mr. Desai's estimates are really estimates of output, rearranged so as to add up to estimates of consumer expenditure. Now that he has done so much, I hope he will go on to do a little more and, having added estimates of capital expenditure and government expenditure, will then dissect his grand total so as to show the contribution of particular industries to India's national product. In those cases where Mr. Desai does not use the output method I should expect his figures to have a downward bias. For they are essentially built up by thinking of as many objects of expenditure as possible, and then guessing how much is spent on each. I have had to dabble in this type of guesswork myself and my experience is that one never thinks of enough items. A list that seems to be exhaustive afterwards turns out to be deficient: one forgets the services rendered by chimney-sweeps or window-cleaners; if one is living in a year of wartime austerity one forgets that in the pre-war year one is studying, ice-cream was still there to be eaten.

Mr. Desai was, of course, driven to these desperate devices because he was a private detective without the resources of government at his disposal. I hope this will not always be the case. But at the same time I must add that government statisticians are not always in a much better position. (In the sense that they are unable to answer criticism by any Tom, Dick or Harry in the way they would like, they are, of course, worse off, but that is another story.) There has been much learned and admirable work done in the field of national income recently, but little practical work by officials in this country, or, I think, elsewhere, in so designing the collecting of the basic statistics that the fundamental totals of product, income and expenditure are thrown up, as well as the detail needed for other purposes.

Much more information will, in future, be at the national income statistician's disposal, but there will still be an uncomfortably large no-man's land, where dubious manipulations and guesswork must usurp the position of hard facts. The use of scientific sampling to reduce or eliminate

CC-0. In Public Domain. Gurukul Kangri Collection, Haridwar

Digitized by Arya Samaj Foundation Chennai and eGangotri



this area has hardly begun in this country. Mr. Desai will, I am sure, agree with me that it is only from systematic sample enquiries that we can expect any major improvement in our estimates, here or in India.

Something should be said about Mr. Desai's attitude to guesses. Where there is just a general impression that an estimate is biassed—as in the case of crop yields—Mr. Desai gives no weight to the impression unless it is backed by hard evidence. Indeed, all through his discussion of the official attitude to statistics in India, he displays a positively Flaubertian distaste for unproven *idées reçues*, such as that the *patwari* always underestimates. But where it is clear that something is spent on an item, but no quantitative evidence is available, he is usually willing to put down a cautious guess, on the ground, presumably, that the error in the grand total will then be less than if an old-fashioned purist line were taken. All this may seem very obvious, but I think it is worth mentioning because, in my experience, far too often people who should be experts fail to use all the information at their disposal and prefer to omit an item altogether rather than hazard a guess.

I agree, too, with Mr. Desai's treatment of errors of estimation. In this part of his work Mr. Desai has followed the practice introduced by Dr. Geary in his work on national income of Eire. He classifies his estimates into four groups, according to the degree of evidence that he attaches to them. To each group he assigns subjective margins of error. He then uses the equations of combination of error to arrive at the total error for each category of expenditure, and sets out what proportion of his final totals falls within each error-group. This is an example which deserves to be followed by all investigators of national income and expenditure.

At the same time I find his results surprising, though not more surprising than those obtained by Miss Deane, who used similar methods in her recent book. Mr. Desai finds that his total is subject to a standard error (if one can use the term to describe errors not objectively determined) of 7 per cent., and he comments that this is likely to be on the high side. Miss Deane finds that the error in her estimates of the national income of Northern Rhodesia may be less than 10 per cent.; for Nyasaland she suggests 15 to 20 per cent., and for Jamaica about 8 per cent. To me these figures seem astonishingly low. We have in this country a succession of official estimates made in the last seven years, of the national income in 1938. The latest estimate is just about 6½ per cent. above the estimate made seven years ago. And yet I should be surprised if the statisticians responsible for the 1941 estimates would, had they applied Mr. Desai's method, have put the margin of error of their calculation at as much as 5 per cent. Later information has suggested that the original estimate had a downward bias, but this was, I am fairly certain, not suspected at the time. In other words, although I approve Mr. Desai's practice I suspect that his results are unduly optimistic. However, I commend them to the notice of the eminent economist who recently suggested that the British official estimates of consumers' expenditure were 13, 14, 15 or 16 per cent wide of the truth.

I am afraid my remarks on Mr. Desai's paper have been rather fragmentary. This is because I agree so completely with his methods. Until a lot more painstaking work of this kind has been done, econometric work is bound to remain rather speculative: Mr. Desai's seems to me a model of the sort of work that is urgently needed.

Sir JOHN HUBBACK, seconding the vote of thanks, said: I am particularly glad, on this my first appearance as a speaker at the Royal Statistical Society, to have been given the privilege of seconding the vote of thanks to the author of this paper. For two reasons: the first is that Mr. Desai has attacked with great skill and immense energy a problem which has been, and still is, in the thoughts of most of us who have spent many years in the service of India; the problem in fact of attempting to estimate the average standard of life in India. The second reason is that Mr. Desai is a product of that famous nursery of eminent economists, Kings College, Cambridge, in which I also was nurtured, though I make no claim whatever to eminence in economics. I have read and listened to Mr. Desai's paper with the very greatest interest, as, I am sure, have all of you, and I should like to make a few remarks about it.

I notice that in paragraph 1.4 Mr. Desai writes: "Cooking and other domestic services of housewives are excluded on conventional rather than logical grounds." Surely, it is a matter for a blush on the part of the economists, deriving, as they do, their very name from the practice of housekeeping, that they are still bound by such a ridiculous and outworn convention. Again, I notice in paragraph 2.3 that Mr. Desai has paid tribute to the high literary quality of administrative reports of the past, including the very pettiest. It is very gratifying indeed, and I must say, very surprising. I am reminded of a very dear friend of mine who prefaced his remarks by saying, when he gave a similar commendation, that he gave it "at the risk of embarrassing a bureaucracy unused to praise". I think that that, more or less, applies to Mr. Desai's

CC-0. In Public Domain. Gurukul Kangri Collection, Haridwar

Digitized by Arya Samaj Foundation Chennai and eGangotri



remarks. His tribute is all the more gratifying when one remembers that the directors of the Honourable East India Company, in the early days of that Company, when asked what sort of reports they wished their servants in India to send them, are reported to have said that in official reports they preferred "umdrum style."

Mr. Desai has very lucidly explained the limitations set by the lack of scientific collection of statistics in India. In my early intemperate and possibly impudent youth, I am afraid I felt that much of the statistical information was unintelligently and wastefully collected and often ill-digested. But I hasten to add that I do not think that it would have been better digested had it been more adequately cooked. Indeed, I remember an expert of wheat statistics throughout the world telling me that, whatever might be their other defects, the figures for India were at any rate honestly prepared and that was more than could be said of some of the estimates coming from some other countries. In fact, what he said was more or less what the baker in *The Hunting of the Snark* said in paying a tribute to his parents. He began his "story of woe" with the words, "My father and mother were honest though poor." I think that the statistics in India continue to be honest and have, indeed, somewhat improved in the matter of being less poor. I feel some confidence that the standard of accuracy of some at least of the Indian statistics is not as poor as it was.

But at the same time I am rather horrified to find that in Appendix A (4) Mr. Desai indicates that the figures for 1945–46 were somewhat doctored by various provinces with the idea that they would conceal the large amounts of foodstuffs available for exports, or, on the other hand, support a claim for larger imports into their own provinces from other provinces. If this is true, it is obviously a very regrettable effect of provincial autonomy in India, and I can only sincerely hope that it is a very temporary departure from the strict course of rectitude.

In paragraph 5.6 in Appendix B, Mr. Desai has dealt at some length with the problem of "village retention." As regards rice, I remember estimating, I think for the Banking Inquiry to 1929, that for the rice crop in Bihar, the figures were about 60 per cent. retained, 20 per cent. absorbed at the large rural markets to feed the rural non-cultivators, and only 20 per cent. went ahead actually to get to the large markets at railhead. Those were my figures, and I find that the Bengal Famine Commission took an estimate for Bengal of 54 per cent. retained. A comparison of Table 1 and Table 2 of Mr. Desai's paper gives only 43 per cent. retained for the year 1938–39. But this is for value, not bulk, and since "imputed values" exclude distribution costs, the gap is, of course, closed to some extent. Further, there is the small point that the figure in Table 1 includes the net imports into India, which the Bengal Famine Commission put at about 5 per cent. of the total rice available for consumption. Possibly the figures are thus not quite so far apart as they look at first sight, but I was astonished at the contrast. I am not prepared to deny that both mine and the Bengal Commission's figures are open to Mr. Desai's description "traditional inquiries of little scientific value." but I should like to know more precisely how Mr Desai arrived at his Table 2 figures. However, I will not pursue that particular point. I heartily endorse his demand for a scientific investigation into the matter of "village retention," which is of the greatest importance to the economy of India. I am sure that Professor Mahalanobis and others could devise a perfectly good scheme which would get the information at an inconsiderable cost, and I hope that Mr. Desai will use his influence in that direction.

In paragraph 5.2 it is recorded that "all evidence seems to show that when a cultivator owns a cart and a pair of bullocks, he almost invariably takes his produce to the town market." In the part of India I used to know there must have been very many cultivators who were not so fortunate. For the *bepari* (the itinerant trader with a pack bullock) was much in evidence and the sight of women carrying a yoke with two baskets of rice to the rural markets was exceedingly common.

In Appendix B, 8, Mr. Desai makes some very pertinent remarks about estimates of stocks. The difficulty of getting at anything like the truth where stocks are held for the most part in very small quantities, stowed away in the recesses of the *raiyats*' huts, is, of course, immense.

Mr. Desai's main conclusion is that consumption of food has not kept pace with increase of population, although expenditure on amenities—I won't call them luxuries—has noticeably increased. Food consumption apparently went down between 1931 and 1941. You must remember that there was no restriction on imports during that time, which might be a reason for food going down subsequently when Burma fell. At any rate, one hopes that the drive started during the war for more food production is really going ahead and that India will produce a sufficient amount of food, not only to feed her present population, but go on feeding it as it grows, year by year, by five millions or possibly more.

I heartily congratulate Mr. Desai. If he has to be modest about the reliability of his estimates, he has no reason to be modest about his powers of handling some very intractable material. With those words, I wish to second the motion.

CC-0. In Public Domain. Gurukul Kangri Collection, Haridwar

Digitized by Arya Samaj Foundation Chennai and eGangotri



Dr. V. ANSTEY said that she did not feel that she ought to be saying anything, because she was not a statistician, but she wanted to add her meed of praise to Mr. Desai for his most interesting and valuable paper and his lucid exposition of his methods, which made them plain, even for a non-statistician like herself. She wished to make one comment and one suggestion. Her comment was that very fine tools had obviously been used on very rough material, rather like cutting off a pigtail with a razor. As records of statistical data in India were so inadequate and unreliable, she could not help feeling sorry for Indian students and ex-students who, she knew, were going back to India with the hope of applying statistical methods to them. It seemed to her that what they must do first was to try and influence the collection and recording of figures before they could use their very fine methods to produce practical results. That did not mean that she was casting any doubts on Mr. Desai's figures. She had the fullest admiration for the way in which he had collected his data and tried to fill the gaps.

She would make one, very minor, suggestion: Mr. Desai had given a table showing the expenditure of consumers on different categories of foodstuffs for the one year, 1938–39. It would be extremely interesting if he would give them for some other years also, say 1931–32, for she would very much like to know whether this particular type of evidence would provide additional support for the general conclusion from his figures that consumption *per capita* had declined over this whole period. If they found that the percentage expenditure on food had gone up, that would be a useful check to show the trend of affairs, for, considering the low standard of living in India, one could not help wondering how that could occur without a very substantial rise in the death rate. In so far as there had been an increase in the death rate, she thought it had been on account of such things as the Bengal famine, and not a general rise. One might suggest that the improvement in the distribution of income, due to wartime planning, might have made up for the decline in production *per capita*, as had been the case elsewhere, e.g. in England, but she did not think that that could be the explanation for India, and she would like to know why, in spite of the decline in consumption, the death rate had not risen.

Sir HARRY LINDSAY hoped he would not be out of order in drawing attention to one or two points in connection with paragraph 9, and asking Mr. Desai if he would reconsider one or two matters in connection with Table 4, in which there was comparison between consumer expenditure

*Wholesale Prices, Calcutta*
July, 1914 = 100

| *Year* | *Cereals* | *Sugar* | *Cotton* | *Cloth* | *All* |
|---|---|---|---|---|---|
| 1920 | 153 | 407 | 152 | 325 | 202 |
| 1 | 144 | 270 | 143 | 280 | 179 |
| 2 | 136 | 221 | 191 | 239 | 176 |
| 3 | 112 | 246 | 244* | 221* | 172 |
| 4 | 121 | 239 | 272* | 228* | 173 |
| 5 | 135 | 179 | 205 | 210 | 159 |
| 6 | 139 | 178 | 147 | 173 | 148 |
| 7 | 139 | 171 | 167* | 159* | 148 |
| 8 | 133 | 165 | 167* | 159* | 145 |
| 9 | 125 | 162 | 146 | 160 | 141 |
| 1930 | 100 | 149 | 91 | 139 | 116 |
| 1931 | 78 | 135 | 83 | 123 | 96 |
| 2 | 68 | 146 | 92 | 119 | 91 |
| 3 | 66 | 131 | 80 | 113 | 87 |
| 4 | 69 | 125 | 73 | 115 | 89 |
| 5 | 75 | 128 | 78 | 117 | 91 |
| 6 | 79 | 121 | 89 | 111 | 91 |
| 7 | 77 | 102 | 89 | 117 | 102 |
| 8 | 72 | 132 | 67 | 106 | 95 |
| 9 | 86 | 164 | 75 | 106 | 108 |
| 1940 | 99 | 157 | 87 | 122 | 120 |

* Four years during which the rise of prices of raw cotton over July, 1914, levels exceeded the rise in the price of cotton cloth.

CC-0. In Public Domain. Gurukul Kangri Collection, Haridwar

Digitized by Arya Samaj Foundation Chennai and eGangotri



in India, the United Kingdom and the United States. India has been seriously handicapped by the great discrepancy which has developed during the last twenty or thirty years between the prices of raw materials (and particularly of cereals and food grains) and the prices of manufactured goods. This discrepancy did not have the same effect on the economy of the West. To give one or two practical quotations: if one studied these figures from 1930–31 to 1940, by comparison with the period before the 1914 War, one found that the prices of raw cotton were then about 25 per cent. below the 1914 prices, whereas the prices of cotton goods were just about 25 per cent. over the 1914 range. That must have very seriously affected not only the earning power of the Indian cultivator, but also his power of expenditure on finished cotton goods. Again, the price of sugar (the manufactured article) was away above the price of food grains and cereals. There was a similar point with reference to Table 6. Revaluation had been made on the basis of 1938–39 prices; but that, of course, concealed the fact that 1931 began with a general index figure of something like 96, which rose to 120 by 1940. That rather endorsed Dr. Anstey's statement that some comment on these fluctuations of price between 1931 and 1940 would be extremely valuable.

Mr. J. R. N. STONE added his congratulations to those of the earlier speakers and said that anyone who had constructed national expenditure and income estimates knew only too well the vast mass of material that had to be worked through, and the innumerable acts of judgment which must be made if the available information was to be used to the best advantage. The very thorough use that Mr. Desai had made of the difficult material at his disposal could be seen from the peak of the methodological iceberg visible in the appendices.

What he wished to do was to concentrate his remarks on the general question of reliability. Mr. Desai, he thought, had done all that could be done with the kind of information at his disposal, and his treatment was one which, as Professor Bowley had always stressed, should be more generally adopted by economic statisticians. Mr. Desai's approach had been to classify all his estimates into four broad groups according to their reliability, to assume a margin of error for each group to be applied to all its constituents, to assume a correlation (always 0, +1 or —1) between the constituent errors and then to combine these errors according to the usual rules. This procedure presupposed that the estimates were unbiassed and that the hypothetical distributions, the standard deviations of which were supposed to correspond to some multiple of the margins of error, were approximately normal or, at least, not markedly skew. As was quite clear, there was an immense amount of unverified hypothesis in all this so that, as Mr. Desai fully recognized, the whole method of treatment was intellectually unsatisfying although it was of interest to work out the consequences of one's own subjective judgment. Mr. Desai had been at pains to prevent the reader from getting a mistaken impression of the accuracy which could be achieved by methods of this kind.

In these circumstances it was, perhaps, worth while considering the following question: could the mathematical statistician show the way to a more satisfactory state of affairs? The answer, he thought, was, so far as the past was concerned, no; so far as the future, yes. We might, indeed, improve matters a little by estimating all the other transactions in a system of which consumers' expenditure was a part, and by then adjusting all the transactions subject to the accounting constraints by which they were related. The main result of this kind of exercise—and he had tried it himself—would be to convince any unbeliever of the importance of systematic errors. Where such errors were present the adjustment formulae were likely to underestimate the true range of error of the aggregations. This, he believed, was the most important factor which accounted for the high apparent reliability already spoken of by Mr. Jackson in the estimates put forward, not only by Mr. Desai, but also by Miss Deane.

The important point that emerged from these considerations was that there was nothing which could be called statistical design in the method of collecting statistics of transactions—or, indeed, in the collection of most economic statistics—at the present time. The work was done by collating large masses of incomplete, imperfect and uncomparable material which could only be adjusted to the economist's definitions by the exercise of judgment based on guess work and assumption. But there was no reason why this should always be so. In principle one could set up a consistent set of questionnaires in the form of a social accounting system, adopt a well-defined sampling procedure appropriate to the rather special circumstances of the case, and adjust and expand the information in the sample subject to the accounting constraints which must be satisfied. By such means we might hope to obtain information on which mathematical methods could get a firm grip and these problems were being investigated at the Department of Applied Economics at Cambridge. It would be seen that what he was suggesting was that economic statisticians should take a leaf

CC-0. In Public Domain. Gurukul Kangri Collection, Haridwar

Digitized by Arya Samaj Foundation Chennai and eGangotri



out of the book of their colleagues in more advanced branches of the subject—for example, agricultural experimentation—in order to obtain information which was not only more complete, but also more reliable and in the long run probably, when the development stage had been passed, very much cheaper to collect.

Why, it might be asked, had all this not been attempted long ago? The reason, he thought, was that not so long ago, before the war in fact, the kind of information brought together in Mr. Desai's paper was not essential either for business or for government policy, and its assembly was largely left to individual research workers and enthusiasts in the universities. To-day all this had changed; such information was of crucial importance in government policy and with the inevitable time-lag we might expect to see more resources, and with them more modern methods used in collecting it.

Mr. P. C. MITTRA expressed his gratitude to Mr. Desai for his extremely interesting paper. For the first time in the literature of the National Income of India results had been presented covering a number of years. According to his own experience with detailed breakdowns of national income for various countries, some estimates were always better than none at all and, in fact, some important international discussions had been based on estimates of much cruder type than those now available for India. One important purpose, for which national income figures for all the member countries had been needed by the United Nations Organization was to estimate the contribution of each member nation to the budget of the U.N. For countries for which there were no existing estimates, figures had to be compiled from any published work available on the subject and accepted without much discussion of their accuracy.* It should be emphasized that the authors of such works ought to state precisely the reasons for the various guesses made. An estimate of national income for a statistically backward country was apt to appear convincing to a western reader, when it was presented exactly on the same lines as those used by the statistically more advanced countries. So far as India was concerned, the only reliable statistics relating to the aggregate population were those for agriculture. Year by year the figures for crop estimates were being improved by scientifically conducted crop-cutting experiments.

For the other sections of the economy there are practically no trustworthy official statistics, yet in Mr. Desai's paper there was no precise discussion of the sources and methods on which was based the guesswork he employed in order to obtain his estimates, not only for a particular year, but for a series of years. It would be interesting, for example, to know how he arrived at the variation in the consumption of *biri*, ice-cream, betel-nuts and of various items under the heading "services"; and it would be important to know how he could find out the nature of the variation, over years, of the guesses which enabled him to present a neat table of consumer expenditure. In the absence of a clearly reasoned explanation, the estimates are liable to give the impression that they are comparable with those of other nations. A writer on national income must show in precise terms how each estimate is derived, as an assistance both to future workers in the field, and to those who quoted from such publications. He had no doubt, however, that Mr. Desai would be able to throw light on all these points when his thesis appeared in book form. It implied no disparagement of Mr. Desai's work to suggest that it was not of great use to compile national income estimates of countries such as India, where even the basic statistics did not exist. It was almost beyond the power of a single worker to compute the national income, or aggregate consumer expenditure, for over 300 million people. Nor was it possible to wait for the administration to set up sound statistical offices. On the contrary, there should be ample room for econometric studies of the meagre data, collected by scientifically organized sample surveys, on the principles of the modern methods of experimental design. From such studies it would be possible to ascertain the structural relations between the variables of the national income. With accurate measurements of some of these variables, it should be possible to arrive at estimates of a more quantitative nature than have been worked out before, although the process would be laborious and could only be usefully carried out in a national econometric laboratory equipped with statisticians thoroughly trained in the latest mathematical methods. The urgent need of planning for a newly emerged nation, and also the efforts and endeavours of sincere and painstaking workers like Mr. Desai and Mr. Rao, should move the Government of India to institute, without delay, such a centre of research for the important economic magnitudes of India. Again I thank Mr. Desai for fulfilling such an ambitious project and so providing encouragement and faith for future workers on Indian official statistics.

* When the preliminary stage of the international discussions was over and the Statistical Office had more time to concentrate upon the improvement of the figures originally put down in its tentative working papers, they started a unit to compile regularly figures obtained from official sources in the various countries.

CC-0. In Public Domain. Gurukul Kangri Collection, Haridwar

Digitized by Arya Samaj Foundation Chennai and eGangotri



Mr. K. L. COHEN said national income statistics were only incidental to the Paper. National income statistics were unreliable, partly because the dispersion of individual incomes was extremely important. For instance, it was maintained that people having lower incomes in this country were better off than before the war, even though the country as a whole might not be consuming more in the same proportion. This was bound to be reflected in any form of welfare analysis such as death rate, birth rate and health statistics. Had Mr. Desai any idea of the dispersion of individual incomes in India? He doubted if Mr. Jackson had for England. Until one could get such figures one could not draw any form of welfare conclusions from changes in the national income, especially in India where incomes varied enormously from one part to another.

Secondly, how reliable were market prices as a guide to the relative value of different commodities? If they took the far-fetched example of water in a desert, where it was extremely scarce, its value would be infinite. But if it became more plentiful, its value would fall to a very low price. At what price should we value the quantity? One could not calculate price changes without meeting the problem of new commodities becoming available. Relative prices were not always a good guide to the value of commodities from the welfare point of view, particularly such things as prostitution and religion, which were included in consumer expenditure in the Paper.

It seemed to him to be extremely difficult to estimate the prices people paid, unless one made assumptions of perfect competition, and that the consumer had a free choice in the way in which he spent his income. All this was going to be very important, as prices tended to become very artificial and it ought to be possible to devise some method of measuring changes in national consumption, independent of price changes, other than just taking the quantity changes and adding them at the relative values at any particular period.

Mr. I. RHYS JONES (written contribution): As an ex-Provincial food official, I, too, would like to compliment Mr. Desai on his paper. No one realised the need for reasonably accurate food production, consumption and carry-over estimates more than persons employed in Provincial food administrations during the war years.

As I see it, the defects of Mr. Desai's otherwise excellent paper are that he paints too black a picture of the past and too bright a picture of the future. Further, he barely mentions the differences between the Provinces and tends to neglect the development of the old system of food statistics in the *ryot wari* Province of Madras to a state of greater accuracy than those of the Northern Provinces.

About two-thirds of the Province of Madras is under *ryot wari* settlement and in each of the villages in this *ryot wari* area the village accountant or *karnam* notes the area cropped and the anna yield in the cultivation accounts. The village accountant there is certainly not a policeman, and would be most annoyed if confused with village policemen. He is employed by the Government primarily to maintain the cultivation accounts and calculate the *kist*, or land tax, due from the ryot. He underestimates the yield by a factor which is almost 30 per cent. for paddy, but which is greater for the dry crops. In calculating food production, the Madras Government correct for this underestimation by applying a correcting factor based on the underestimation in previous years. Further corrections are made on the basis of the agricultural department's crop reports.

This method of estimation gives a production figure for rice which has a probable error of certainly less than 5 per cent. This error is considerably less than in the N. Indian *Zamindari*, or permanently settled Provinces, where cultivation accounts are kept with less efficiency. That the error in the case of paddy is less than 5 per cent. has been tested by two methods. The crop cutting experiments, which are carried out every few years, can be used to check and correct the correcting factor. Secondly, the rationing statistics of off-take and procurement, collected in the period 1944 to 1947, can be used for checking production figures. A system of procurement of the surplus of each ryot was introduced into eight deficit districts in 1944 and then extended to the entire Province by early 1946. Under this system the ryot was allowed to retain sufficient grain for his family consumption, at the rate of 1lb. per head per day, and also sufficient grain for wages in kind and for seed purposes. The balance or surplus of the producer's grain was calculated by the *karnam* and entered in a new register maintained in every village from mid 1944 onwards. These surpluses were then procured by Government purchase or by Government nominated agents. Under this system a total of 1·33 million tons of rice out of a total production of 4·24 million tons was, for example, procured in 1945–46. This quantity, together with imports, was distributed to the non-producers on the basis of ration cards. Such a system of procurement and rationing was, of course, introduced primarily to prevent a calamity similar to the Bengal famine in Madras, but at the same time it did provide the Provincial Government with considerable information for checking their production estimates. The fact that the Madras rice production

CC-0. In Public Domain. Gurukul Kangri Collection, Haridwar

Digitized by Arya Samaj Foundation Chennai and eGangotri



figures were accurate to within 5 per cent. in 1945–46 and 1946–47 is also confirmed by Mr. Desai's production figures in Table 9.

Mr. Desai appears to underestimate future difficulties, because even if the Mahalanobis sampling system is introduced into a Province like Madras it will be difficult to eliminate the subjective element completely. The sampling investigators will be subject to the same influences to underestimate yields as the village officers and revenue subordinates have been in the past—although not to the same extent.

In paragraph 5.6 Mr. Desai states that 60 per cent. was generally adopted as the quantity retained by the ryots, i.e. the quantity which could not be procured. So far as I am aware no such figure was ever adopted in Madras. In that Province the procurable surplus was estimated for each district, partly on the basis of the sum of the surpluses in the procurement register, and partly on the basis of the district production estimate. The procurable surplus was naturally greater in a surplus district than in a deficit district. Naturally, too, it was greater in years of good harvests than in years of bad harvests. The figure for procurable surplus, or target, was checked against the quantity actually procured in the year, and the procurement target for the succeeding year could then be more accurately fixed.

Mr. DESAI thanked the various speakers for the way in which they had received his paper, and gave a brief reply to the various points raised. He amplified this in writing as follows:

I agree with Mr. Jackson that for a country like India estimates of income as well as expenditure will of necessity be largely based on estimates of output. It should be possible to review the material and set it out in terms of the respective contributions of agriculture, handicrafts and manufacturing industry, distribution, etc. The last, however, would be largely conjectural, and if separately stated, might be misleading.

It is a pleasant change, indeed, to be complimented for daring to guess. I have, however, constantly endeavoured to keep the guesswork in its proper place in estimating the reliability of the global total. I have adopted a high figure of $\pm$ 50 per cent. as the plausible error magnitude of these guesses. I do not know whether describing these high level errors as "standard errors" could have any sensible meaning, but on the whole the errors are assumed to have a two to one probability, and if one assumes a normal distribution the maximum error should be about three times the "standard" errors mentioned in the paper. The $\pm$ 5 per cent. "standard" error of the total would, therefore, imply a maximum error of $\pm$ 15 per cent.

At such low levels of income, I submit, the above estimates of error are not guilty of optimism. There are definite upper and lower limits beyond which the national income figure is not likely to go, and a $\pm$ 15 per cent. maximum error gives us a span of 30 per cent.

I also believe there is no reason to peg on to the tail end of the distribution by asking always for maximum errors, and that the concept of "standard errors," while employed without the usual precision, is likely to be more helpful. In doing this I am following the suggestion of Mr. Stone. I am, however, conscious of the jumble of "maximum" and "standard" errors which will have to be tackled in the estimates of different countries. Rao's and Miss Deane's error values are maximum values, and these will have to be curtailed to one-third to make them comparable with mine.

I am very glad (and grateful) to receive the support of a veteran like Sir John Hubback in my plea for the adoption of random sampling to estimate retention. In reply, however, to his query regarding the present estimates of "village retention" I have already indicated my source to be the *Marketing Reports* (Paragraph 5.7). This was not because I considered them very scientific, but because an attempt is made therein to get estimates of retention separately for the various provinces and states. I divided consumption estimates on the basis of "trade blocs" which are homogeneous economic units and in terms of which inter-zonal movements of principal commodities are available in the publication dealing with the Inland (Rail and River-borne) Trade of India.

I agree with Sir John's other point about the conventional items, but I believe that work of this type should be done on a basis of agreed sets of definitions in the different countries. If each computer started to introduce items independently where would this end? Why, for instance, should not the laundry done by one's wife be included? For the moment I prefer to adhere to the now generally agreed definitions, though I would urge care when international comparisons of the standard of living are made.

It would be easy from Table 6 (p. 278) to work out the distribution of expenditure for years other than 1938–9, as Dr. Anstey has suggested. The fall in *per capita* consumer expenditure is accompanied by a *fall* in the proportion of expenditure on food—a state of affairs contrary to what we are accustomed to expect on the basis of Engelian observations. But the over-all

CC-0. In Public Domain. Gurukul Kangri Collection, Haridwar

Digitized by Arya Samaj Foundation Chennai and eGangotri



averages exclude the effects of the changes in the distribution of incomes, and this may contain a probable explanation of this curious behaviour. It would also be easy to work out the distribution of expenditure on food between the different items. I have, however, refrained from doing so as I had no reliable information on the year to year changes in the consumption of some of the items (fish, for instance).

An answer to Dr. Anstey's last question is simple. The errors in the estimates both of food consumption and population are insignificant. But still, if the deathrate has not risen it may presumably be argued that the smaller quantity of food available has been better distributed, or that medical facilities have improved, or both. I am told that a single improvement in the treatment of malaria is likely to save more lives than would probably be lost because of the food deficiency.

I am grateful to Sir Harry Lindsay for his suggestion regarding the uneven fluctuations in the price series of primary commodities and manufactured products. It should be possible to examine the effect of these by getting back to the working sheets. Unfortunately lack of time prevents me from doing so at the present moment, but I hope to take up the suggestion at a later date.

Mr. Mittra, I am afraid, has been a little unreasonable. It is impossible within the scope of a single paper to set out individually and in detail all the various adjustments made to available statistics in respect of all the items. As for the sources, I have briefly indicated these in Appendix D. So far as information for year-to-year variation is concerned, I have given a separate Table (Table 7, p. 282) consisting only of the items which were reliable for that purpose. The scope of the Table is clearly indicated in paragraph 9.3, where he will find that no *biri*,* ice-cream, betel, nuts or barbers' services come within the scope of the Table. Finally, he himself realizes that these points could be cleared up when the complete work (of which the paper is a summary) is printed.

Moreover, surely macro-dynamic econometric works (as I understand them) can only *follow* (not precede) long series of consistent estimates of economic aggregates.

I fully agree with Mr. Cohen on the general points he raises. As for the figures of distribution of incomes in India, I am afraid they simply do not exist. Some scattered information can be obtained regarding the size of landholdings, and the salary incomes in the income-tax ranges (agricultural incomes are not subject to income-tax). Beyond that there is little else available on the subject.

I am sorry not to have been able to satisfy Mr. Rhys Jones. All my estimates have been based, as far as possible, on a provincial breakdown; but obviously I could not do adequate justice to "the difference between the provinces" in the course of such an austerity menu. In the system of crop estimation which he describes as prevalent in Madras I have always intensely distrusted the so-called "correcting factors" applied to the estimates of *karnams* who "underestimate the yield by a factor which is almost 30 per cent. for paddy, but which is greater for the dry crops." Because the ultimate guesses are not far out, they need not be called scientific, and that is all I have stressed in my paper. Nor is there anything scientific in the process of procurement he describes. Instead of the traditional 60 per cent. we have one pound per head. No one really knows whether the cultivator actually kept one pound per head or more or less. And what makes him think that the *karnam* who underestimates production by 30 per cent. maintains an accurate procurement register? Or is there a "correction factor" for the provincial register? I rather distrust the tendency to rely on production registers to check up procurement, and procurement registers to check up production. Such trial and error estimates might be useful for administrative purposes, but one need not delude oneself about their scientific value. As regards sampling experiments, I agree with Mr. Rhys Jones that it would be impossible to eliminate completely the bias arising from the human element, but it could be considerably reduced by the interpenetration of samples described by Professor Mahalanobis in the various reports of his sampling surveys.

Finally, I am glad that both in the comments above and in my personal discussions with workers in the same field here and abroad, I have received great encouragement and support for the schematic representation of errors in this paper. May I then plead for standardization on these lines, or on any alternative scheme? What matters, however, is the urgency of the need to realize what Professor Bowley (I understand) has been consistently stressing, viz. that *all* national income estimates must maintain (and submit for the guidance of users) a running account of errors. Doubtless, there are difficulties, but this is no argument for evasion. And once we accept the need, there is a lot to be said for standardization.

* Tobacco is taken as the whole group.

CC-0. In Public Domain. Gurukul Kangri Collection, Haridwar

Digitized by Arya Samaj Foundation Chennai and eGangotri



As a result of the ballot taken during the meeting, the candidates named below were elected Fellows of the Society:

Leslie Robert Bates.
Peter George Montagu Clark.
Neville Keith Crampton.
Florence Nightingale David.
Melchior Charles Cornel Maria d'Abranyi.
John Aungle Dryden.
Donald John Fearnley.
Rudolf Wilhelm Goldschmidt.
Sidney Green.
Charles Shaw Henderson.
Adriaan Johannes de Jong.
Arthur Kenneth Kirby.
Herbert Lloyd-Jones.
George Harold McDonough.
Angus Baker McMorran.
Mary Louise Mark.
Maurice Nadin.
Arthur Maitland Organ.
John Cecil Skinner.
George Waugh.
Joseph Thomas Wiltshire.
Frank Philip Wilson.
Herman Ole Andreas Wold.

CC-0. In Public Domain. Gurukul Kangri Collection, Haridwar

Digitized by Arya Samaj Foundation Chennai and eGangotri



# Industrial Productivity in England and Scotland*

By H. W. Singer and C. E. V. Leser

[Read before the Royal Statistical Society, June 15th, 1948, Dr. E. C. Snow, Honorary Vice-President, in the Chair.]

## 1. The Problem

In the 1935 Census of Production for the United Kingdom the value of net output per person employed in all industries covered is given as £225 for England and Wales and as £213 for Scotland. Closer calculation shows the English figure to be £225·1 and the Scottish figure to be £213·2. Net output in Scotland therefore shows a deficiency per head of £11·9, or 5·3 per cent. of the English figure; for the Scottish economy as a whole, as far as covered by the Census, this is equivalent to a deficiency of over £8 million per annum.

The value of net output per person employed—in future briefly referred to as output per head—is a possible measure of efficiency of production; side by side with physical measures it has been used for international comparisons of productivity (1). The question therefore arises whether output per head does not lend itself equally well to an interregional comparison, such as between England—in future always meant to include Wales—and Scotland. Can we, then, conclude that industrial productivity in Scotland is less than 95 per cent. of its counterpart in England?

On first thoughts, output per head may appear to be even more suitable for a comparison between different regions within the same national unit than for a comparison between different national units, since some of the difficulties inherent in international comparisons will not be encountered here. In particular, it can be safely assumed that in interregional comparisons, there will be no differences in statistical definition of "net output," "person employed," "industry," etc., such as exist between different nations. Possibly also—though this is less certain—such things as the degree of monopoly, scale of advertising, etc., may be assumed to be more similar between different regions than between different nations. Furthermore, perhaps the major difficulty in international comparisons consists in finding the appropriate rate of exchange between the two currencies; a good deal of the discussion has centred on this problem (2). This difficulty does not arise here—or does it? It is true that transport costs might bring about different price levels even within one nation. But wholesale prices for industrial articles—it is wholesale prices which matter, since distribution is excluded from the Census—are not likely to show any large differences within a country like Great Britain, which has national markets and a highly developed transport system. It can therefore safely be assumed that the £ has the same value in England as in Scotland.

As against these advantages of the interregional analysis which tend to make it more reliable than an international analysis, further thought shows that there are some factors which work the other way. In particular, there is probably more specialization, within each industry, between different parts of the same country than between different countries, especially if they are as large as the U.S. and the U.K. Thus, in a given industry, such as cotton spinning, a comparison between the U.S. and the U.K. may consider units that are more identical by the nature of the product than a comparison between England and Scotland would do, in spite of possible discrepancies in the definition of the industry; in the example given here this is, in fact, quite likely. The broader the industrial classification, the more doubtful becomes the advantage of the interregional over the international comparison.

It should, however, be stressed that in the present study, output per head is not being used to compare individual industries. For such a purpose, indeed, far more detailed research would be required, and a more accurate measure, probably based on physical units, would have to be found. The value of net output is, admittedly, influenced by various factors hardly covered by a definition of technical efficiency. But in this study, output per head is used for global comparisons over a wide range of industries, and it is suggested that the disturbing factors approximately cancel out.

* The study submitted here is a result of an enquiry conducted successively by the two co-authors at the Economic and Social Research Section of the University of Glasgow. Throughout the whole enquiry a substantial contribution to the work was made by Miss Anne H. Wightman. The analysis and the conclusions to which it leads are confined to the field of industry as far as covered by the U.K. Census of Production, and they are entirely based on published figures.



CC-0. In Public Domain. Gurukul Kangri Collection, Haridwar

Digitized by Arya Samaj Foundation Chennai and eGangotri



Another difficulty arises from the fact that no regional figures for working hours are available in this country. This is a grave deficiency in our statistical knowledge; it is to be hoped that in future, when "disguised unemployment" through different hours of work may be more important in regional differentials than the published rates of registered unemployment, this deficiency will be remedied. We shall, therefore, have to neglect the factor of possible differences in working hours, and deal in terms of "output per man year" rather than "output per man hour." It is arguable that if there were shorter working hours in Scotland which would explain partly or wholly the differences in net output, this could yet be considered as a factor of inefficiency—a failure to utilize efficiently the existing labour force. This, however, would be stretching the meaning of the term "efficiency" beyond what is intended here.

Perhaps it is permissible to assume equal working hours, in spite of a higher rate of unemployment in Scotland. Whilst the onset of higher unemployment in a region will, in its first impact, largely reduce working hours by inducing short time or preventing overtime, there will be a tendency for working hours to be equalized again as the unemployment differential persists. The Scottish unemployment differential certainly had, up to 1935, persisted for more than a decade; also, unemployment was still a national phenomenon, and there would seem to be little tendency to longer hours and overtime anywhere. Thus, the assumption of equal working hours does not appear to be unjustified.

Bearing these qualifications in mind, we can now return to the question whether the observed difference between average output per head in England and Scotland can be interpreted as a difference in industrial productivity? Some reflection will show that such a conclusion would be premature. It seems quite possible for the lower average in Scotland to be due to differences in industrial structure; that is to say, industries with a low output per head in both regions may be relatively more important in Scotland than in England. It is therefore necessary to allow for this factor by eliminating the effects of the industrial structure peculiar to each region. The methods employed to this purpose and the results obtained will be described in the following section.

## 2. Output Per Head and Industrial Structure

The 1935 Census of Production lists 123 trades; this number is brought up to 126 if local authorities and private companies are counted separately in the case of gas, electricity and water works. These trades are classified in 16 broad industrial groups. Table 1 shows, for each of those groups, the number of trades which it contains and, for England as well as for Scotland, the number of persons employed in them, given as a percentage of all employees covered by the Census.

TABLE 1.

| Industrial group | Number of trades | Percentage of persons employed | |
|---|---|---|---|
| | | England | Scotland |
| Textiles | 17 | 13·5 | 16·9 |
| Leather | 3 | ·7 | ·4 |
| Clothing | 6 | 7·6 | 3·7 |
| Iron and steel | 12 | 7·5 | 7·8 |
| Engineering, shipbuilding and vehicles | 7 | 15·2 | 14·6 |
| Non-ferrous metals | 6 | 1·8 | ·6 |
| Food, drink and tobacco | 17 | 6·8 | 9·8 |
| Chemicals and allied | 11 | 2·7 | 2·3 |
| Miscellaneous | 13 | 2·6 | 2·3 |
| Building and contracting | 1 | 6·9 | 7·1 |
| Clay and building materials | 5 | 3·6 | 2·2 |
| Timber | 5 | 2·7 | 2·5 |
| Paper, printing and stationery | 7 | 5·6 | 6·4 |
| Mines and quarries | 5 | 11·6 | 14·0 |
| Public utility services | 10 | 9·7 | 8·5 |
| Government departments | 1 | 1·5 | ·9 |
| Total | 126 | 100·0 | 100·0 |

CC-0. In Public Domain. Gurukul Kangri Collection, Haridwar

Digitized by Arya Samaj Foundation Chennai and eGangotri



The table reflects some of the differences in the distribution of manpower between the two countries. Scotland specializes in "textiles," "food" and "mines"; all of them are groups which are also large in England. On the other hand, Scotland employs less people in "clothing" and in most of the smaller industrial groups. Thus, employment can be said to be more evenly distributed in England than in Scotland.

In order to eliminate these differences in industrial structure, we take the Scottish output per head figures for each of the 16 groups and combine them in an average weighted by the number of persons employed in each group in England. The resulting figure can be compared with the average directly obtained for England. Similarly, the English output per head figures for the 16 groups may be re-weighted by the Scottish employment distribution and be compared with the direct Scottish average. The results of these calculations are presented in Table 2.

TABLE 2

| | Average output per head for 16 industrial groups (all trades) | | |
|---|---|---|---|
| | Actual weights | English weights | Scottish weights |
| England (£) . . . . . | 225·1 | 225·1 | 227·7 |
| Scotland (£) . . . . . | 213·2 | 211·9 | 213·2 |
| Scotland (England = 100) . . | 94·7 | 94·1 | 93·6 |

It is seen that the distribution between industrial groups does not explain the difference in average output per head between England and Scotland. On the contrary, if both countries had either the English or the Scottish distribution, the gap would be even slightly widened. In both England and Scotland, average output per head would be slightly higher at the Scottish than at the English employment distribution.

If we want to take this analysis one step further and consider the distribution of employment not only between broad groups but also within each group, we come up against a statistical difficulty; for some of the 126 individual trades, separate figures for England and Scotland are not available. There are 9 trades which were not represented at all in Scotland in 1935, and for which, therefore, no comparison is possible. In the case of a further 18 trades, separate particulars for England and Scotland were not published because of the non-identification clause in the Census of Production Act; their publication might enable investigators to identify the business of individual firms.

For the major part of the following analysis we shall leave aside the 27 trades for which these difficulties arise, as well as Government Departments, which do not really fit into our scheme of industries. Thus, we are left with 98 trades for which a straight comparison is possible. It is true that in several cases the figures given for England include a small number of firms in Northern Ireland, again because of the non-identification clause; but the effect is negligible. The 98 trades cover 95·4 per cent. of all persons employed in Census industries in England; 97·4 per cent. of all employed in Scotland. Thus, results obtained for these industries can be expected to be largely valid over the whole field.

For these 98 trades we can work out the actual averages for England and Scotland, and then proceed in the same way as previously with the 16 industrial groups, that is to say, calculate net output for Scotland at English and for England at Scottish employment weights. An additional possibility consists in working out the unweighted averages of output per head for the two regions, or, more strictly speaking, the arithmetic means obtained by giving equal weight to each industry. This procedure is justifiable by considering each industry as a separate test case in which English and Scottish output per head are matched against each other. The method possesses the advantage that it gives results which do not depend on any particular employment distribution. A drawback, however, is that its results are considerably influenced by the industrial classification which is adopted. Also, it may be appropriate for some purposes to take account of the different importance of individual industries.

In Table 3 the results obtained by the four different methods of weighting are shown side by side. The "crude" averages based on actual weights, which are given first, are only given for the purpose of comparison with other averages. As emphasized before, they are in themselves unsuitable for measuring differences in productivity. But the remaining three sets of averages are each meaningful, although none of them alone would tell the whole story.

CC-0. In Public Domain. Gurukul Kangri Collection, Haridwar

Digitized by Arya Samaj Foundation Chennai and eGangotri



TABLE 3

| | Average output per head for 98 trades | | | |
|---|---|---|---|---|
| | Actual weights | English weights | Scottish weights | Unweighted |
| England (£) | 224·4 | 224·4 | 220·8 | 277·1 |
| Scotland (£) | 209·8 | 211·0 | 209·8 | 251·4 |
| Scotland (England = 100) | 93·5 | 94·0 | 95·0 | 90·7 |

From this table several interesting conclusions can be drawn:

(*a*) Taking the English average as 100, the Scottish average output per head, at actual weights, comes to 93·5 for the 98 industries, whilst it amounted to 94·7 for the Census as a whole. Thus it appears that, by restricting our analysis to the 98 industries, we somewhat exaggerate the disparity between England and Scotland. Possible adjustments for this factor will be discussed at a later stage.

(*b*) In contrast to the result obtained by reweighting the 16 industrial groups, this refined method shows that the difference between England and Scotland is slightly reduced by standardizing either by the English or by the Scottish employment distribution. The English, as compared with the Scottish, employment distribution tends to make for higher average output per head, especially for England.

(*c*) Although the difference in industrial structure may be said to explain a small part of the difference between output per head in England and Scotland, it does not by any means explain the whole of it. Thus, there seems to be a true difference in industrial productivity in favour of England. Further evidence to support this view will be given later.

(*d*) In both regions the weighted averages are far below the unweighted ones; England is even more affected than Scotland. Taking industry for industry, Scottish output per head would fall short of the English figure by more than 9 per cent. In this sense it could be said that the Scottish deficiency is even larger than suggested originally; it is only the influence of the big industries which tends to conceal it.

This point is also brought out in the following two tables, which give separate particulars for "large," "medium" and "small" industries. The classification is based in Table 4 on the number of employees in England, in Table 5 on the number in Scotland.

TABLE 4

| | Trades with number of employees in England (000) | | | All Trades |
|---|---|---|---|---|
| | 200– | 50–200 | –50 | |
| Number of industries | 7 | 25 | 66 | 98 |
| Percentage of all employed | | | | |
| England | 40·9 | 39·4 | 19·7 | 100·0 |
| Scotland | 38·6 | 36·2 | 25·2 | 100·0 |
| Average output per head (unweighted): | | | | |
| England (£) | 197·0 | 251·8 | 295·2 | 277·1 |
| Scotland (£) | 178·0 | 245·4 | 261·4 | 251·4 |
| Scotland (England = 100) | 90·4 | 97·5 | 88·6 | 90·7 |

TABLE 5

| | Trades with number of employees in Scotland (000) | | | All Trades |
|---|---|---|---|---|
| | 20– | 5–20 | –5 | |
| Number of industries | 9 | 19 | 70 | 98 |
| Percentage of all employed | | | | |
| England | 34·3 | 31·9 | 33·8 | 100·0 |
| Scotland | 50·1 | 31·5 | 18·4 | 100·0 |
| Average output per head (unweighted): | | | | |
| England (£) | 195·2 | 224·9 | 301·8 | 277·1 |
| Scotland (£) | 185·4 | 204·4 | 272·6 | 251·4 |
| Scotland (England = 100) | 95·0 | 90·9 | 90·3 | 90·7 |

CC-0. In Public Domain. Gurukul Kangri Collection, Haridwar

Digitized by Arya Samaj Foundation Chennai and eGangotri



Both tables reveal a considerable increase in output per head when we proceed from large to smaller trades. This fact does not, of course, allow us to draw any conclusions regarding relative efficiency of large and small industries. What matters for our purpose is that Scotland compares least favourably with England in the small industries; it compares most favourably in the industries which are medium-size in England, or in those which are large in Scotland. This explains why the weighted averages, particularly those based on Scottish weights, give more favourable results for Scotland than an unweighted average.

It is often said that Scotland specializes unduly on a few big industries—this is illustrated by the fact that half the employment provided by the 98 trades is concentrated on the 9 biggest ones —and that a greater degree of diversity would be desirable. The results reached here do not disprove this contention. They show that on the basis of a one-year comparison, greater reliance on the small trades would, *ceteris paribus*, tend to accentuate the gap between English and Scottish productivity. But the development of these smaller industries might well be accompanied by a rise in their output per head and, in that case, would justify itself.

Instead of working out averages we may consider the frequency distribution of the 98 ratios between output per head in Scotland and England. The main features of this distribution are given in the following table:

TABLE 6

| Trades with output per head in Scotland (England = 100) | Number of trades | Percentage of persons employed | |
|---|---|---|---|
| | | England | Scotland |
| –80 | 26 | 19·3 | 15·9 |
| 80–100 | 43 | 49·6 | 54·1 |
| 100– | 29 | 31·1 | 30·0 |
| Total | 98 | 100·0 | 100·0 |

Thus England is seen to have a higher output per head than Scotland in the case of 69 trades; those in which the Scottish figure is higher are outnumbered by more than 2 : 1. This fact, perhaps even more than the averages shown previously, points to the difference between the two regions being significant.

Furthermore, we find that Scotland does not specialize on industries in which it has an apparent advantage over England. But Scotland does specialize on industries in which its disadvantage is of a minor nature, and to some extent avoids those in which the difference in favour of England is largest.

In the same way as averaging over the whole field, we may take each of our averages over the trades in each industrial group separately. The main results obtained this way are presented in Table 7; they cannot, of course, be considered to be as reliable as the averages over all the 98 trades.

TABLE 7

| Industrial group | Number of trades | Percentage of persons employed | | Average output per head in Scotland (England = 100) | | | |
|---|---|---|---|---|---|---|---|
| | | England | Scotland | Actual weights | English weights | Scottish weights | Unweighted |
| Textiles | 14 | 13·9 | 17·4 | 100·7 | 112·0 | 97·4 | 100·0 |
| Leather | 3 | ·8 | ·4 | 110·5 | 98·9 | 103·4 | 106·0 |
| Clothing | 5 | 7·8 | 3·8 | 79·2 | 80·3 | 80·0 | 80·4 |
| Iron and steel | 7 | 6·7 | 7·2 | 99·6 | 93·2 | 96·1 | 88·5 |
| Engineering, etc. | 6 | 15·4 | 15·0 | 88·0 | 85·2 | 90·3 | 87·4 |
| Non-ferrous metals | 4 | 1·8 | ·6 | 125·3 | 99·5 | 107·8 | 98·0 |
| Food, etc. | 16 | 7·2 | 10·1 | 79·0 | 80·7 | 91·7 | 89·4 |
| Chemicals, etc. | 8 | 2·7 | 1·5 | 80·8 | 79·9 | 82·4 | 70·9 |
| Miscellaneous | 8 | 2·4 | 2·3 | 105·0 | 81·1 | 91·1 | 88·3 |
| Building; clay, etc. | 6 | 11·0 | 9·5 | 88·0 | 89·9 | 87·7 | 84·6 |
| Timber | 4 | 2·8 | 2·6 | 89·2 | 86·4 | 88·0 | 97·5 |
| Paper, etc. | 5 | 5·6 | 6·5 | 90·9 | 91·8 | 90·1 | 90·5 |
| Mines and quarries | 3 | 11·8 | 14·4 | 113·8 | 113·8 | 112·9 | 98·8 |
| Public utilities | 9 | 10·1 | 8·7 | 100·5 | 112·8 | 105·6 | 110·3 |
| All groups | 98 | 100·0 | 100·0 | 93·5 | 94·0 | 95·0 | 90·7 |

CC-0. In Public Domain. Gurukul Kangri Collection, Haridwar

Digitized by Arya Samaj Foundation Chennai and eGangotri



The largest deficiencies for Scotland are thus found in "clothing" and "chemicals." On the other hand, Scotland compares quite favourably with England in "textiles," "leather," "non-ferrous metals," "mines and quarries" and "public utilities." The last two groups, together with building, comprise the "non-factory trades." Thus the lower Scottish productivity seems to be concentrated on the "factory trades." In Table 8 this point is more clearly brought out.

TABLE 8

| | Factory trades | Non-factory trades | All trades |
|---|---|---|---|
| Number of trades | 85 | 13 | 98 |
| Percentage of persons employed: | | | |
| England | 70·8 | 29·2 | 100·0 |
| Scotland | 69·6 | 30·4 | 100·0 |
| Average output per head—actual weights: | | | |
| England (£) | 232·4 | 205·0 | 224·4 |
| Scotland (£) | 212·9 | 202·9 | 209·8 |
| Scotland (England = 100) | 91·6 | 99·0 | 93·5 |
| English weights: | | | |
| England (£) | 232·4 | 205·0 | 224·4 |
| Scotland (£) | 207·7 | 218·8 | 211·0 |
| Scotland (England = 100) | 89·4 | 106·7 | 94·0 |
| Scottish weights: | | | |
| England (£) | 231·8 | 195·5 | 220·8 |
| Scotland (£) | 212·9 | 202·9 | 209·8 |
| Scotland (England = 100) | 91·8 | 103·8 | 95·0 |
| Unweighted: | | | |
| England (£) | 275·6 | 286·6 | 277·1 |
| Scotland (£) | 242·7 | 307·9 | 251·4 |
| Scotland (England = 100) | 88·1 | 107·4 | 90·7 |
| Number of trades with output per head in Scotland (England = 100) | | | |
| –80 | 26 | — | 26 |
| 80–100 | 36 | 7 | 43 |
| 100– | 23 | 6 | 29 |
| Total | 85 | 13 | 98 |

The difference between the results for the factory trades and the remainder is striking. If our analysis had been restricted to the factory trades—a procedure which would seem to have been permissible—the Scottish deficiency would have been found to amount to 8–12 per cent., according to the weighting system adopted.

It remains for us to investigate the possibility of a bias introduced by the omission of the "non-disclosed" industries. As mentioned before, there are 18 trades for which individual figures for England and Scotland separately are not obtainable. But with the aid of the published group totals and grand totals, we can derive the English and Scottish figures for 7 composite trades, which comprise between them the 18 listed trades. There are 6 combinations, each of which contains the undisclosed trades within one industrial group; the groups are: Textiles (2 trades), iron and steel (2), chemicals (3), miscellaneous (3), paper (2), mines (2). The last composite trade contains 4 trades belonging to 4 different groups. If we treat these combinations in the same way as our selected trades, we arrive at the following results, shown in Table 9.

As to be expected, the introduction of the composite industries somewhat raises the average in favour of Scotland; but the difference is not large; Scottish output per head still remains about 4–8 per cent. below the English figure for all trades and about 7–10 per cent. below for factory trades. It must also be remembered that the Scottish weights, which gave a relatively favourable result for Scotland, are based on a less balanced industrial structure than the English weights, and the less favourable results derived from the English weights are thus probably more relevant.

CC-0. In Public Domain. Gurukul Kangri Collection, Haridwar

Digitized by Arya Samaj Foundation Chennai and eGangotri



TABLE 9

| | Average output per head for 7 composite trades | | | |
|---|---|---|---|---|
| | Actual weights | English weights | Scottish weights | Unweighted |
| England (£) . . . . | 252·3 | 252·3 | 310·2 | 252·3 |
| Scotland (£) . . . . | 397·4 | 283·9 | 397·4 | 299·9 |
| Scotland (England = 100) . . | 157·5 | 112·5 | 128·1 | 118·9 |

The comparison is, of course, less reliable than in the case of individually defined industries; but as far as the figures go, they suggest a higher productivity in Scotland for the composite industries. The effect of their inclusion in the totals is brought out in the following two tables:

TABLE 10

| | Average output per head (factory and non-factory trades) | | | |
|---|---|---|---|---|
| | Actual weights | English weights | Scottish weights | Unweighted |
| 98 selected and 7 composite trades: | | | | |
| England (£) . . . | 225·0 | 225·0 | 222·3 | 275·4 |
| Scotland (£) . . . | 213·1 | 212·4 | 213·1 | 254·6 |
| Scotland (England = 100) . | 94·7 | 94·4 | 95·9 | 92·4 |
| 98 selected trades: | | | | |
| Scotland (England = 100) . | 93·5 | 94·0 | 95·0 | 90·7 |

TABLE 11

| | Average output per head (factory trades only) | | | |
|---|---|---|---|---|
| | Actual weights | English weights | Scottish weights | Unweighted |
| 85 selected and 6 composite factory trades: | | | | |
| England (£) . . . | 233·1 | 233·1 | 233·7 | 274·5 |
| Scotland (£) . . . | 217·5 | 210·1 | 217·5 | 248·1 |
| Scotland (England = 100) . | 93·3 | 90·1 | 93·1 | 90·4 |
| 85 selected factory trades: | | | | |
| Scotland (England = 100) . | 91·6 | 89·4 | 91·8 | 88·1 |

In the following section all calculations will be made for the 98 selected industries. This is justified by the fact that the main result, a deficiency in Scottish productivity of about 5–9 per cent., seems to be acceptable for the whole field of industry. The inclusion of the undisclosed trades would slightly diminish the gap, but the elimination of the non-factory trades, which would leave us with industry in the narrower sense, would more than compensate for this factor.

## 3. FACTORS EXPLAINING OUTPUT DIFFERENCES

We have shown that the difference between output per head in England and Scotland is not accounted for by the difference in industrial distribution, and it is suggested that an English superiority in productivity actually exists. What, then, are the factors causing or associated with this difference? The number of possible explanations is, of course, large. Two hypotheses, however, immediately suggest themselves as readily admitting of statistical treatment. The two countries may differ from each other with regard to composition of the labour force, or size-distribution of firms. We shall investigate the two factors in turn.

From the Census tables giving the composition of employees at a given date for each industry, we have divided the total number of persons employed into men and women, as well as into opera-

CC-0. In Public Domain. Gurukul Kangri Collection, Haridwar

Digitized by Arya Samaj Foundation Chennai and eGangotri



tives and non-operatives (administrative, clerical, etc.). The average proportions for the 98 industries analysed here work out as follows:

TABLE 12

| | Average percentage of employees in 98 industries who are— | | | |
|---|---|---|---|---|
| | Male operatives | Female operatives | Male non-operatives | Female non-operatives |
| Actual weights: | | | | |
| England | 65·51 | 22·99 | 8·29 | 3·21 |
| Scotland | 66·64 | 22·62 | 7·00 | 3·74 |
| English weights: | | | | |
| England | 65·51 | 22·99 | 8·29 | 3·21 |
| Scotland | 64·47 | 23·73 | 7·75 | 4·05 |
| Scottish weights: | | | | |
| England | 69·38 | 19·61 | 7·99 | 3·02 |
| Scotland | 66·64 | 22·62 | 7·00 | 3·74 |
| Unweighted: | | | | |
| England | 60·70 | 24·63 | 10·67 | 4·00 |
| Scotland | 60·00 | 25·71 | 9·52 | 4·77 |

The table shows that, taking industry for industry, Scotland has a higher proportion of women and a lower proportion of men both in the operative and in the non-operative field. This remains true, whether the unweighted average or the average weighted by English or Scottish employment is considered.

If we compare weighted and unweighted averages, we find that employment tends to concentrate on industries using a large proportion of male operatives. This is the case for English, but even more so for Scottish employment. Scotland, thus, in actual fact, absorbs a higher proportion of male operatives than England by specializing on "male" industries, although within each industry there is more "dilution" by female labour.

We are now confronted with the possibility that the higher output per head in England is due to its higher proportion of males within the average industry. If this is true, then those trades in which Scotland employs relatively fewer males and more females than England should show the greatest degree of inferiority in output, whilst in the trades in which Scotland has more men and fewer women than England, Scottish output per head should be higher, or at least not substantially lower than the English figure. We can accurately test this hypothesis by correlating the difference between the two countries in net output, with the difference in proportion of males, taking each of the 98 trades as one observation. The regression here, as in the future cases, is assumed to be linear.

The result is disappointing. The correlation coefficient has the expected positive sign, but amounts to no more than + ·050, and the regression coefficient of output difference on difference in male proportion amounts to +£·39. The unweighted average of the percentage of males is lower by 1·85 in Scotland, which would thus account for output per head being lower by £·7. But, in fact, output per head (again taking the unweighted average) is lower by £25·7. Our hypothesis in this form would thus not enable us to explain more than a tiny fraction of the difference.

There is, however, another aspect of Table 12. Relatively the difference between England and Scotland is particularly marked in the percentages of male non-operatives. The question is whether this has anything to do with the difference in output per head? A high proportion of non-operatives, which adds to the "paper work" of the industry, is sometimes supposed to be a dead weight. But the proportion of male non-operatives in particular may be thought to reflect the importance of the managerial, research and technical element in industry. The hypothesis that a high proportion of male non-operatives makes for high output per head would thus seem to be quite plausible.

The result obtained by correlating, for the 98 industries, the differences in output per head and

CC-0. In Public Domain. Gurukul Kangri Collection, Haridwar

Digitized by Arya Samaj Foundation Chennai and eGangotri



in percentage of male non-operatives does, in fact, strongly support this theory. The correlation coefficient has the surprisingly high value of +·251, and the regression coefficient consequently amounts to £7·07. The percentage of male non-operatives is, on the average, higher by 1·15 in England than in Scotland (taking unweighted figures). Thus, a difference of £8·1 in output per head is accounted for by this factor. This is a substantial proportion of the whole difference in output per head, which amounts to £25·7. We can therefore say that the lower Scottish productivity apparently is to a considerable extent due to a low non-operative labour force—a finding which is of great interest.

We shall now turn to the second factor, the size of establishments. For the 98 trades the number of establishments in England and in Scotland is given and may be used to work out the average size of establishment. For our purpose, however, it will be more appropriate to calculate the number of establishments per 1,000 employees, which is the inverse of average size (apart from a constant factor). This device is made for technical reasons; it will enable us to keep the weighting system for our averages consistent. A high value of this measure thus indicates a wide spread of the labour force over a large number of small firms, whilst a low value means a greater degree of concentration. Working out averages as before, we arrive at the following results:

TABLE 13

| | Establishments per 1,000 employees in 98 trades | |
|---|---|---|
| | England | Scotland |
| Average: | | |
| Actual weights . . . . . | 8·91 | 9·89 |
| English weights . . . . . | 8·91 | 12·22 |
| Scottish weights . . . . . | 9·69 | 9·89 |
| Unweighted . . . . . | 12·37 | 16·90 |

If each trade is given equal weight, the Scottish labour force is found to be dispersed over a relatively larger number of establishments than the English labour force. This conclusion is upheld if the English employment weights are used, though the difference tends to disappear if based on Scottish employment. But, as previously mentioned, the Scottish employment structure is rather specialized and can less usefully be applied to England than the English structure to Scotland, since it is more liable to lead to chance results. We can therefore say that Scotland has comparatively more and smaller establishments.

At the same time it is learnt from a comparison of weighted and unweighted averages that employment tends to concentrate on industries in which the number of establishments, relatively to the labour force, is low. This specialization is much more marked for Scotland than for England.

In order to test the hypothesis that the higher number of establishments per 1,000 employees in Scotland is partly reponsible for the lower output per head, we again apply the method of correlating the differences between England and Scotland for the 98 individual trades. Again, the theory is borne out by the facts. The correlation coefficient amounts to −·194, the regression coefficient to −£1·77. Scotland, on the average, has for every 1,000 employees 4·53 establishments more; this explains a deficiency in output per head of £8·0 out of the total of £25·7.

The low proportion of male non-operatives and the large number of establishments thus appear to be the key factors which are at the root of the Scottish productive deficiency. It remains to be seen whether the two factors are related or exert their influence independently of each other; in other words, we have to apply multiple, instead of simple, regression analysis.

The correlation coefficient between the differences in male non-operatives and in establishments works out as +·006. Thus, the two factors are independent of each other (if anything, they tend to get in each other's way, since their correlations with output differences have opposite sign). Combined, the two key factors account for a Scottish output deficiency of £16·2, which is the major part of the actual difference.

The combined effect of the two explanatory factors can be seen in a less exact but more convenient way from the following table, in which the 98 trades have been classified according to

CC-0. In Public Domain. Gurukul Kangri Collection, Haridwar

Digitized by Arya Samaj Foundation Chennai and eGangotri



whether the influence of the two factors is favourable to England, counteracting or favourable to Scotland:

TABLE 14

| | Trades in which Scotland, compared with England, has relatively— | | | |
|---|---|---|---|---|
| | Fewer male non-operatives, more establishments | More of both or fewer of both | More male non-operatives, fewer establishments | All trades |
| Number of trades | 41 | 53 | 4 | 98 |
| Average output per head (unweighted): | | | | |
| England (£) | 322·4 | 249·9 | 172·2 | 277·1 |
| Scotland (£) | 275·5 | 237·0 | 194·5 | 251·4 |
| Scotland (England = 100) | 85·5 | 94·8 | 113·0 | 90·7 |

The result is quite clear. There are only 4 industries in which Scotland has an advantage over England in both factors; in these, it also has an output superiority. The Scottish output inferiority is largely concentrated in the 41 industries in which the two factors work in favour of England. It is the fact that this first group is so much more numerous than the third group which appears to be largely responsible for the overall deficiency in Scottish output per head.

To a large extent, the difference between average output per head in England and Scotland has thus been explained. More strictly speaking, a possible explanation has been given; there is, of course, no proof that it is the only one. There may be other factors which are responsible, but the influence of which we have not assessed. Consequently, the conclusions reached here must remain of a somewhat tentative character, pending confirmation from other sources.

## 4. CHANGES BETWEEN 1924 AND 1935

The deficiency in output per head is obviously more serious for Scotland if it is centred in the expanding industries than if centred in the declining industries. In order to get information on this point, we have worked out, for the United Kingdom as a whole, the ratio between the employment figures in 1924 and 1935 for each of the 98 trades. The trades have then been divided into four groups according to the value of this ratio, that is to say, broadly speaking, according to whether they are rapidly expanding, moderately expanding, stagnating or declining. If we obtain for each of these groups the main results for 1935, the following picture presents itself:

TABLE 15

| | Trades in which, for the U.K., employment 1935 was in terms of employment 1924 | | | | All trades |
|---|---|---|---|---|---|
| | >130% | 110–130% | 90–110% | <90% | |
| Number of trades | 25 | 17 | 27 | 29 | 98 |
| Percentage of persons employed, 1935: | | | | | |
| England | 24·0 | 16·7 | 27·0 | 32·3 | 100·0 |
| Scotland | 15·6 | 16·4 | 29·6 | 38·4 | 100·0 |
| Average output per head, 1935: | | | | | |
| Scotland (England = 100): | | | | | |
| Actual weights | 95·8 | 95·0 | 89·5 | 102·0 | 93·5 |
| English weights | 89·6 | 98·0 | 86·3 | 104·1 | 94·0 |
| Scottish weights | 91·0 | 94·9 | 90·0 | 102·6 | 95·0 |
| Unweighted | 85·8 | 103·8 | 87·1 | 91·7 | 90·7 |

The table does not present a regular trend if we proceed from expanding to declining trades, but it suggests that, on the whole, the Scottish deficiency is most marked in the rapidly expanding industries. It is of incidental interest to note the well-known Scottish specialization on declining industries, revealed by the employment distribution.

CC-0. In Public Domain. Gurukul Kangri Collection, Haridwar

Digitized by Arya Samaj Foundation Chennai and eGangotri



In further pursuit of this line of approach an analysis of the 1924 Census of Production has been made. The analysis has been confined to those trades for which separate particulars were available for England and Scotland both in 1924 and in 1935. This condition implies that, out of the 98 trades analysed for 1935, 6 have to be omitted and a further 8 have to be combined into 4 "composite trades." The 88 comparable trades thus obtained cover, for 1924, 93·0 per cent. of the English and 90·0 per cent. of the Scottish labour force included in the Census; in 1935 the coverage is 93·7 per cent. for England and 92·7 per cent. for Scotland. These proportions are sufficiently high to allow comparisons between the two Census dates; Table 16 is devoted to such a comparison on the lines hitherto adopted.

TABLE 16

| | Average output per head in 88 comparable trades | |
|---|---|---|
| | 1924 | 1935 |
| Actual weights: | | |
| England (£) | 207·4 | 219·1 |
| Scotland (£) | 203·9 | 210·2 |
| Scotland (England = 100) | 98·3 | 95·9 |
| English weights: | | |
| England (£) | 207·4 | 219·1 |
| Scotland (£) | 204·3 | 207·3 |
| Scotland (England = 100) | 98·5 | 94·6 |
| Scottish weights: | | |
| England (£) | 207·4 | 219·7 |
| Scotland (£) | 203·9 | 210·2 |
| Scotland (England = 100) | 98·3 | 95·7 |
| Unweighted: | | |
| England (£) | 260·9 | 273·5 |
| Scotland (£) | 250·2 | 250·6 |
| Scotland (England = 100) | 95·9 | 91·6 |

For both countries an increase in output per head during the period 1924–35 is observed; to interpret this it would be necessary to introduce price indices. What matters for our purpose is the fact that the Scottish increase tended to lag behind the English increase, and the gap between the two countries, which was small in 1924, has become wider in 1935. The unweighted figures, which are unaffected by changes in industrial structure, are particularly instructive. They show that apart from any effect of changes in employment Scottish, as compared with English productivity seems to have suffered a real decline. Another aspect of this phenomenon is presented in Table 17.

TABLE 17

| | Trades in which output per head in Scotland, relatively to England between 1924 and 1935— | |
|---|---|---|
| | Increased | Decreased |
| Number of trades | 33 | 55 |
| Percentage of persons employed: | | |
| England: 1924 | 47·1 | 52·9 |
| 1935 | 40·9 | 59·1 |
| Scotland: 1924 | 48·5 | 51·5 |
| 1935 | 43·0 | 57·0 |

It is seen that the trades in which Scotland gained on England during the period 1924–35 are outnumbered by 5 : 3. The effect of this factor on the Scottish economy as a whole was mitigated by the fact that the 33 "gaining" trades occupied a comparatively large, though decreasing, share in the industrial system of both countries.

In the light of the conclusions reached in the previous section we may expect to find in 1924 a smaller difference between proportion of male non-operatives in England and Scotland, or a

CC-0. In Public Domain. Gurukul Kangri Collection, Haridwar

Digitized by Arya Samaj Foundation Chennai and eGangotri



smaller difference between establishments per 1,000 employees, or both, than in 1935. Regarding the first factor the hypothesis can easily be tested, as follows:

TABLE 18

| | Average percentage of male non-operatives in 88 trades | | |
|---|---|---|---|
| | England | Scotland | Difference |
| Actual weights: | | | |
| 1924 | 7·64 | 7·26 | − ·38 |
| 1935 | 8·19 | 7·06 | −1·13 |
| English weights: | | | |
| 1924 | 7·64 | 7·93 | + ·29 |
| 1935 | 8·19 | 7·63 | − ·56 |
| Scottish weights: | | | |
| 1924 | 7·81 | 7·26 | − ·55 |
| 1935 | 8·03 | 7·06 | − ·97 |
| Unweighted: | | | |
| 1924 | 10·63 | 10·29 | − ·34 |
| 1935 | 10·78 | 9·62 | −1·16 |

The table gives quite a straightforward result. On each count the Scottish deficiency in male non-operatives is shown to have increased; indeed, according to the English weighting system it only has appeared since 1924.

For a comparison with the number of establishments in 1935, only the number of returns is available for 1924. This leads to higher figures in 1935 than in 1924 both for England and Scotland, but the ratio of the two countries should not be substantially affected. It is also necessary for this comparison to omit, or combine with other trades, a further 4 trades.

TABLE 19

| | Average number of establishments or returns per 1,000 employees in 84 trades | | |
|---|---|---|---|
| | England | Scotland | Ratio |
| Actual weights: | | | |
| 1924 | 8·20 | 8·59 | 1·048 |
| 1935 | 8·95 | 10·14 | 1·133 |
| English weights: | | | |
| 1924 | 8·20 | 9·98 | 1·217 |
| 1935 | 8·95 | 11·76 | 1·314 |
| Scottish weights: | | | |
| 1924 | 7·88 | 8·59 | 1·090 |
| 1935 | 9·34 | 10·14 | 1·086 |
| Unweighted: | | | |
| 1924 | 11·67 | 15·20 | 1·302 |
| 1935 | 13·00 | 17·59 | 1·353 |

At both Census dates the Scottish labour force is dispersed over a relatively larger number of firms than the English labour force. The extent to which this is the case has increased, or at least has not significantly diminished, between 1924 and 1935.

These results confirm our suppositions. The theory that a low number of non-operatives and a high number of establishments, in relation to employment, tends to lower output per head, thus finds some additional indirect evidence. If the theory is correct its lessons for the future are obvious.

This brings us to the end of the present study. On its subject-matter it is not suggested that the last word has been said. It is hoped that future research on measurement of productivity and the meaning of net output figures will help to clarify matters further.

CC-0. In Public Domain. Gurukul Kangri Collection, Haridwar

Digitized by Arya Samaj Foundation Chennai and eGangotri



*References*

(1) Rostas, L. (1943), "Industrial production, productivity and distribution in Britain, Germany and the United States," *Econ. J.*, 53, 39. Rostas, L. (1948), "Comparative productivity in British and American industry," *N.I.E.S.R.* Occasional Paper XIII. Cambridge University Press, 1948.
(2) Snow, E. C. (1946), "The international comparison of industrial output," *J.R.S.S.*, 107, 1–30. Jewkes, J. (1946), "Is British industry inefficient?", *The Manchester School*, 14, 1, 1–16.

## Discussion on the Paper by Dr. H. W. Singer and Mr. C. E. V. Leser

Dr. C. Oswald George: It gives me great pleasure to propose a vote of thanks for this paper on the subject of productivity, which at this moment is so important to the nation. Not the least of its merits, I feel, is the fact that it will give rise to a good deal of discussion, perhaps on the relative merits of inter-regional as against inter-national or inter-factory comparisons, or the relative merits of comparing production in value and in quantitative terms. I do not propose to discuss these matters, but to restrict myself to a much more humble task, as I feel it may be better in opening the discussion that I should try to make clear one or two of those terms which are used by the Census of Production Office but may not be clear to other people, and to see if there is any possibility that the way in which these terms and definitions are used may have had any effect on the authors' results.

First of all, let us see what these results are. The paper presumably originated in the scientific curiosity of the authors being stimulated by two figures, the 1935 average net output per head (with actual weights) for all trades (for firms employing more than ten persons), which they give as £225·1 for England and Wales and £213·2 for Scotland. They adopt certain methods of analysis, and develop later on an argument based not on English and Scottish weights, but on a straight average of the results for 98 trades, and there they calculate a difference of £25·7 between the English and Scottish average net output per head. Then using correlation analysis, which will give rise to further discussion no doubt, they state that £8·1 of the £25·7 is explained by the larger percentage of non-operative males in England; they claim in support an impressive correlation coefficient of 0·251, well above the 5 per cent. level of significance. A further £8 is explained, they say, by the larger size of establishments in England. These figures seem impressive, but although mathematically it may be true to use the words "these amounts are accounted for by these factors," I feel that there is much more analysis to be done before one can feel fully satisfied. The authors go on to check up the changing net outputs per head in English and Scottish industries between 1924 and 1935, and they claim that these provide indirect support for their earlier conclusions.

Let us now examine one or two of the terms used. As is made clear in the paper, net output per head is obtained by deducting from gross output the cost of materials and fuel used and the amount paid for work given out, and then dividing by the average number of persons employed (including administrative, technical, etc., staff, but excluding outworkers). At first sight that seems fairly clear and free from any difficulties, but net output is the fund from which have to be met depreciation, wages, salaries, rents, advertisement and selling expenses, etc. The net output per employee, which may be affected further by variations in labour composition, overtime, etc., must therefore be regarded with much reserve as a measure of the relative efficiency of industries. There are also, of course, possible disturbing factors in gross output, such as differences in the bases of valuation as between trades, and, less likely, but still possible, between countries; for example, large firms may have transferred goods from one establishment to another at prices much lower than the ordinary selling price. Another point is that in certain areas—for example, London—there may be a monopoly factor due to geographical position. Take, for example, building; builders in London may have to pay higher wages than elsewhere, and as only people working in London can build houses in London, the fact that wages are higher there will necessarily be reflected in an increased gross output and net output per head.

This point is of some practical interest, and one wonders how much, or how little, such factors cause the difference between the net output per head of London firms compared with firms in other areas. One or two rough calculations from the published figures will show how the average net output per head of the Greater London firms affect the England and Wales figure. You will remember that for all trades the latter was £225, for Scotland £213, and for the United Kingdom £222. The Greater London area figure is given in the Census report as £272 net output per head, and that for England and Wales (without London) works out at £212. In other words the Scottish average net output per head for all trades is not lower, but is higher than that for England and Wales without London. What is further noteworthy is that if we divide the trades into factory

CC-0. In Public Domain. Gurukul Kangri Collection, Haridwar

Digitized by Arya Samaj Foundation Chennai and eGangotri



and non-factory, we find that the factory trades in England and Wales (less London) show an average net output per head of £219, or £2 more than those in Scotland, but in the non-factory trades the average net output per head for Scotland is £204, and for England and Wales (less London) £195, a difference in favour of Scotland of £9 per head. I do not suggest that this proves anything, and until further investigations can be made into the effect of standardizing for industrial structure and other factors, it is impossible to draw any valid conclusions.

There are one or two further possibilities of variation. To get the net output per head we deduct work given out (this may vary as between industries), and then divide by the average number of persons employed, and here we may find some differences between Scotland and England. The number of persons employed, as you know, is stated irrespective of whether they are employed full-time, half-time or overtime, or whether they are males or females, and there is one rather important omission: outworkers are not included in the number of persons employed. In the glove trade, for instance, the total number of persons employed in 1935 was 10,300 (excluding outworkers), the number of outworkers being 5,500 or over 50 per cent. The glove trade is not included in this study because there was no glove trade in Scotland, but this extreme example will show the possible effect of excluding outworkers from the divisor. In some parts of the country, there may also be people who work half-time in factories and spend the rest of their time working in their homes or in agriculture, and the net effect would be to decrease the apparent net output per head without necessarily having any effect on real productivity.

Figures for the clothing trades will illustrate one or two of these points. The detailed figures available for the tailoring and dressmaking trade show that the aggregate net output amounted to £48,200,000 for England and Wales and to £2,300,000 for Scotland. In England and Wales the amount paid for work given out was £3,000,000 (equivalent to 6 per cent. of net output), but in Scotland it was only £23,000 (or 1 per cent.), a difference which might have some effect on the real net output per head. In England and Wales the excluded outworkers were equivalent to about 3 per cent. of the "average number of persons employed (excluding outworkers)," in Scotland about 0·25 per cent.; this is another factor which would affect the English real net output per head as compared with the Scottish. In the tailoring and dressmaking trade as a whole the net output per head in Scotland was £115, in England and Wales £147—quite a big difference. The figure for the United Kingdom was £143, but in the Greater London area it was £179 per head, and for England and Wales (excluding London) it was £126; the difference is much smaller, but is in favour of England and Wales (excluding London). But when one thinks of the many possible disturbing factors, including the 6 per cent. difference in work given out and the 3 per cent. difference in the number of outworkers, there appears to be a case for further investigation, and other methods of analysis may be needed in order to get conclusive results.

Another significant and by no means irrelevant fact about the clothing trades is that, contrary to what is sometimes assumed to be a fairly general rule, net output per head does not vary directly with the size of establishment. In tailoring and dressmaking in the United Kingdom in 1935, the average net output per head for all firms (employing more than ten persons) was £143; the net output per head for the smaller firms employing 11 to 24 persons was £167, and was, therefore, much higher than that for the larger firms (who employ more than 24 persons). In wholesale tailoring the corresponding figures were £143 for all firms (over ten), and for the small firms (11 to 24) £186, which appeared to indicate that the small firms had a big advantage. The wholesale bespoke section shows still more remarkable figures, namely, for all firms (over 10) £149, but for the firms employing 11 to 24 persons the net output per head was no less than £268. In the retail bespoke trade the picture was rather different, the average for all firms (over 10) being £204, and for the smaller firms (11 to 24) £209. The sum of all this is that bigger firms in the clothing industry may show a lower net output per head than smaller firms. But it would be extremely dangerous to draw from these figures any unguarded conclusions, other than that it is not safe to assume that net output per head necessarily varies directly or consistently with the size of firm. I might add that all the figures given here or earlier are obtainable from the published Census reports for 1935.

One final point: The authors declare in the first sentence in Section 3 that differences in industrial structure did not explain the differences between net output per head in the two countries. As we have seen in the clothing industry, there may be substantial differences between different sections of a trade, and one may wonder what would be the result, assuming it were practicable, if the authors' calculations could be re-worked on the basis, not of trades but of sections of trades; unfortunately, when one had the coefficients, one would still be left with the fundamental problem of what they really signified.

Dr. George concluded by formally moving the vote of thanks to the authors for their stimulating paper.

CC-0. In Public Domain. Gurukul Kangri Collection, Haridwar

Digitized by Arya Samaj Foundation Chennai and eGangotri



Dr. L. ROSTAS: I have very great pleasure in seconding the vote of thanks. This is the third paper on productivity in the Society within the last few years. This is highly satisfactory, as it indicates that economic research into productivity is at last catching up with the great public importance of, and public interest in, this subject. The three papers presented to the Society have dealt with three different aspects of the productivity problem. Dr. Snow's Presidential Address in 1944 dealt with international comparisons of productivity, Mr. Tippett's paper last year discussed inter-firm variations in productivity within a particular industry, and lastly, the present paper deals with inter-regional variations of productivity, that is, with variations between two regions within the same economic unit, having no tariff barriers and free movement of population and capital. This is a new and interesting field, and the Economic Research Section of Glasgow University and the authors have to be congratulated for opening up this new area of research.

The paper gives a great deal of detail on various subjects relating to Scottish and English industrial structure, and in their final conclusions the authors are extremely modest. They imposed on themselves two limitations: first of all, the investigation was based entirely on published information, and secondly, was confined to global comparisons between Scotland and England, whereas there must be substantial interest in the comparison of productivity of individual industries between different regions. In fact, for many practical purposes, e.g. location of industry, these details are of equal interest with the general comparison.

The concept of productivity measurement which is used is that of value of net output per head, and I think this is a good rough yardstick, when comparing the activity of different firms within the same period, making the same sort of product, provided it is reasonable to presume that buyers are sufficiently well informed to keep prices in line. Thus the concept of the value of net output per head is a good measure to use for inter-regional comparisons. In many ways this concept is superior to the concept of physical output per head, in that it allows for a number of factors such as differences in the processes covered or differences in the type of labour used. On the other hand, there are a number of reasons—Dr. George mentioned a few—why net output per head can differ irrespective of productivity even within the same industry. Analysis shows that variations in net output per head within any one census trade are substantial. This is partly due to the fact that firms making rather different products or different ranges of product, or having a different production structure, are classified into the same census made, and partly due to such factors as differences in capital equipment, prices charged or transport charges.

The authors' finding is that the order of magnitude of Scottish-English differences is about 5 per cent. My first reaction was surprise that the difference is so small. There is no reason to expect that inter-regional differences should be as big as inter-firm differences, which in many cases are as much as 100 per cent.; American investigators found that inter-regional variations are less marked than many others, so that if one could establish that there is a difference of productivity between England and Scotland of the order of 5 per cent. that would be significant. I suggest, however, that considering the original data used and the methods applied, it is doubtful whether the 5 per cent. can be regarded as significant. One has the suspicion that this difference can be explained by the fact that the census classification does not go far enough, and I feel that the 98 groups of industries on which the calculations are based should be expanded, as such comparison is still based on such broad groups as chemicals or mechanical engineering, each counting as one industry.

As against this criticism, the authors can argue that in whatever way they have broken down their industry data, and whatever weighting system they used, and whether they compared data for 1924 or 1935, the Scottish figure was consistently lower. This is a strong point, and I think they make out a good *prima facie* case. One could still argue that there might be some common factor, apart from efficiency, which affects all the comparisons, such as generally lower Scottish prices, or differences in working hours, or lower Scottish wages, and I am glad to note from the paper that the authors intend to explore in more detail the significance of these important factors.

Having established a *prima facie* case, I hope that their comparison of productivity in terms of net output per head will be supplemented by comparison of physical output per head, based both on a census basis and by field work in comparing man hours required to produce comparable products in selected English and Scottish factories. Firms which have plants in both countries might be interested in this type of research, and one could perhaps enlist their co-operation.

I want to make one observation on section 3 of the paper. I am a little diffident about the value of the hypothesis that a lower number of male operatives reflects a lower importance attached to managerial, research and technical elements in industry. If I am right, the authors did not find that the ratio of non-operatives to operatives was very different in the two countries; in fact, it appears to be very similar. In other words, although Scotland employs less male salaried persons, it employsmore female salaried persons. It may happen that some clerical work which

CC-0. In Public Domain. Gurukul Kangri Collection, Haridwar

Digitized by Arya Samaj Foundation Chennai and eGangotri



is performed in Scotland by women is performed in England by men, and that would defeat the hypothesis. The census category of non-operatives is too wide and mixed, including as it does clerical, technical, administrative and sales people, for much importance to be attached to the correlation coefficients obtained.

This is not the last word but the beginning of research into this most fascinating subject, and I would express my admiration for the clarity and ingenuity with which the authors tackled it. I hope that this research will be continued.

The vote of thanks was put to the meeting and carried unanimously.

Mr. LYLE said that to him the most interesting part of the subject was the actual measurement of productivity, and he was glad that the authors made use of the net output per man-year and not per man-hour, which is an unsatisfactory measure except for certain inter-departmental comparisons. The net output per man-year appears to be the best measure of productivity so far proposed, the ratio for individual industries or firms being a good measure of their contribution to the total productivity. But this measure can give us no indication of a firm's or an industry's ability to increase its productivity, and in view of the expected change in distribution of the population in the next fifty years, a considerable rise in productivity per employed person will be necessary to maintain even the present standard of living.

One of the few ways in which a firm can increase its productivity is by ploughing back profits in labour-saving mechanization or new processes resulting from research, but while the saving in numbers employed may increase the net output per employed person, it will not increase the firm's ability to increase its productivity unless it is accompanied by a decrease in production costs. It is possible, at least in theory, for a firm or industry to pass from prosperity to bankruptcy without any change in its net output. If, *ceteris paribus*, we increase the pay-roll (total of wages and salaries) we reduce the profit, the net output remaining constant, but an obvious limit is when the profit becomes zero and there is nothing left for the creation of new capital, or even to cover depreciation, and the concern is facing its end.

In addition to our measure of productivity, a measure of our ability to increase that productivity seems to be required, and one such measure is provided by what may be called the "productivity ratio," being the net output divided by the pay-roll. This ratio has a natural lower limit of unity at the danger point mentioned, and being a dimensionless ratio, that limit is unity whether we are dealing with a British industry working in pounds or its American opposite number working in dollars.

Some years ago Professor Bowley was kind enough to work out the values of this ratio from the 1935 census figures, having, however, to estimate salaries which were not known. The ratio for "All Factory Trades" was 1·75, and those for individual industries varied between 1·3 and 2·6. As far as one can judge a figure of 2·0 is good, and below 1·5 poor.

It is not suggested that this ratio is in any way a complete measure of industrial efficiency, which cannot be measured in such simple terms, but it is submitted that for a rising standard of living and leisure a rising productivity ratio is a necessary though not a sufficient condition.

Mr. BROWNE said that there were many pitfalls in this output concept. For example, it was not impossible to get a figure of less than unity; where an industry was highly competitive and in one particular year met with severe losses, even although it was highly efficient, he thought there would result a figure of less than unity. In using the net output concept another pitfall lay in the correlation of the differences in size of firms. There might be one reason why one tended to get a positive correlation—that is, a higher net output with the larger size of firm—which had no connection with better productivity, namely the possible existence of monopoly profits. This might explain one of the examples given by Dr. George. He had quoted the bespoke tailoring industry, and mentioned that the larger firms had a much smaller net output. It was interesting to note that the large firms in the bespoke tailoring industry were highly competitive, whereas the small firms tended to be rather monopolistic in their own way.

Mr. D. S. BLACKLOCK congratulated the authors on their method of first standardizing the statistics, and then applying regression analysis to the Scottish rate differences. His criticisms were confined to details.

Section 2 described methods employed and results obtained, but he preferred the more direct and simpler method of first subtracting to find the differences in output per head, secondly, multiplying by the structure weight to evaluate the contribution made by each group, and thirdly, adding the products to give major group totals and a grand total. This method was more informative. The hypothetical totals given in the paper were really an unnecessary step, since

CC-0. In Public Domain. Gurukul Kangri Collection, Haridwar

Digitized by Arya Samaj Foundation Chennai and eGangotri



the focus was the *difference* between the Scottish and English totals. In other words, instead of the method of multiplication, addition and comparative subtraction, he preferred to begin with the comparative subtraction and then get the products and total.

Could employment really be said to be more evenly distributed in England than in Scotland? The Barlow Report on the Distribution of the Industrial Population had a statistical appendix from which it was possible to compute the effect of the industrial-structure factor for Mid-Scotland in comparison with the other six areas of industrial Britain during the period 1923 to 1937 in terms of insured employees. In a paper written in 1943 for the Science (Research) Society, he had computed from the Barlow Report Appendix the following relative effects of the structure factor during the period, weighting the differences in the 1923 group composition by the British group rates of expansion or contraction: Mid-Scotland, 4 per cent. relative decline, being part of 12 per cent. total decline. Midland Counties, 9 per cent. relative expansion, being part of 10 per cent. total. Lancashire, 11 per cent. relative decline, being part of 14 per cent. total. West Riding; Notts and Derby: relative decline 13 per cent., being more than the total 7 per cent. decline. Northumberland and Durham: relative decline 18 per cent., being more than the total 17 per cent. decline. London and Home Counties: relative expansion 18 per cent., being part of 21 per cent. total. Glamorgan and Monmouthshire: relative decline 21 per cent., being part of 26 per cent. total.

His comments on these structural contributions to the total relative decline (expansion) of the seven areas read:

"The Barlow Royal Commission inquired into the Distribution of the Industrial Population, and was naturally not particularly interested in the Mid-Scotland area, where the distribution is remarkably close to the weighted average for the nation (represented by zero effect for structure). At the same time it might well have given more prominence in its 320 pages than in fact it did to the peculiarity that the 1923 industrial distribution 'explains' only 33 per cent. of the 1923–37 change in the case of Mid-Scotland, while it explains as much as 79 per cent. of the Lancashire change, 81 per cent. of the Welsh change, 86 per cent. of the London change and 100 per cent. of the changes in the other three areas. Instead, the author of the Appendix gives a discursive commentary, merely stating:—'The case of Mid-Scotland remains to be explained by Section 2,' and again, '. . . while in Mid-Scotland the reverse is the case,' the hypothetical rate of increase being much lower than the National Average. This seems disappointing, and it is believed that if the author had made his analysis by the Differential Technique, some tentative explanation of the peculiar experience of Mid-Scotland would have been given either by the Commission or by the Scotsmen who have read the Report. Is it a valid inference that Mid-Scotland failed to make the most of its industrial opportunities during 1923–37, or was the area subjected to any special demographical influences during the period?"

He did not, therefore, agree that English employment was better distributed than Scottish employment; there was a tendency for head offices and research departments to congregate in England (mainly the London area), and this fostered an unhealthy feeling of dependence and pessimism in Scotland; offsetting this tendency there was a better proportion of Scots in agriculture, fishing and ancillary trades.

The choice of weights—Scottish, English or British—need not be influenced by the evenness or otherwise of the Scottish distribution of industry. He looked forward to the time when regional comparisons on the national background would be a quarterly routine affair, and therefore his choice of weights was emphatically the British figures. He would say: "if this region had the national average structure of industry, its net output or employment would have been more or less by so much on its pro-rata share of the national total." This statement implied that the regional structure was used to provide the weights for evaluating the expansion or contraction rates, since the sum of both effects was already known. Of course, if one was not interested in the individual contributions to the rate-factor effect, it was sufficient to subtract the structure-factor effect from the known sum. In referring to Scotland as a region of Britain he was for the moment ignoring its national characteristics in culture, law and religion. These distinctive characteristics might be the cause of the apathy and pessimism which afflicted the junior partner of the Union of 1707.

Table 6 recorded the comparison for 98 trades, 69 of which showed an excess English output per head. The authors commented that this fact was more significant than the difference in weighted averages. Even allowing for the use of the word in its lay sense, it was not easy to see why the authors attached special importance to this Table; surely enumeration of trades was a less informative and efficient method of handling statistical data than regression analysis. More generally, he would like the authors to state whether they found the published statistics were adequate for a full comparison, since his own experience in the analysis of changes in the fishing fleet had been unfavourable.



CC-0. In Public Domain. Gurukul Kangri Collection, Haridwar

Digitized by Arya Samaj Foundation Chennai and eGangotri



The comment on Table 6 that Scotland did not specialize on industries in which it had an apparent advantage was important, even though the statistical data related to average efficiency and not to the economic marginal efficiency. He would like the authors to list the main trades in this group, so that Scottish management could take a more optimistic view of their expansion. *Per contra*, in those factory trades (Table 7) in which Scotland had an apparent disability, there might be a relatively large number of firms or company groups with head offices and research departments in the London area. He believed that Scotland suffered greatly from a shortage and quality deficiency in scientists.

Section 3 dealt with the regression analysis of the effect of the expansion-contraction rate difference. It seemed worth while to compute the fiducial limits of the two major coefficients found by the authors. He did not expect that these two major factors would be found to be independent; it might be disproved by an accumulation of other observations, or by using a statistical variable which allowed for the grouping of establishments under unified financial control.

The reasoning on p. 316 invited the criticism that "dead weight" could inflate output values as much as expert research and management. If he might be allowed a personal note, he had decided three years ago to invest £20,000 in a new company mainly for the production of building boards from Scottish resources such as bracken and sawdust. Owing to endless discussions on company control, nearly half this investment had already been lost on legal fees, consultation fees, etc., in London, and there was a further claim for over £5,000 from a "specialist" who had, to the best of his knowledge, contributed nothing to the company, which was now in liquidation. His original intention had been merely to report on the unsatisfactory state of Scottish economy, but this had led inevitably to his making an effort to improve the comparison with English areas. He had not wanted others to suffer loss from his enterprise, and had found that he had thereby laid himself open to the criticism of weakness and rashness. Much of the £10,000 expected loss had been incurred in English legal costs, and he could not resist making the comment that lawyers should be given special weight in the enumeration of the non-operative "producers." The authors had not had his fantastic experience, and they were therefore able to comment on Table 14 with such words as "advantage" and "favour." He had also had the experience of working for three years in the Scottish crofting county of Shetland, where the population was 50 per cent. greater 100 years ago.

In conclusion, he would say that his criticisms did not weaken the respect he felt for the two authors. They were well qualified to follow the example of Sir John Sinclair, who compiled the 21-volume *Statistical Account of Scotland*, 1791–99. Without publication of comparative statistics there would be little effort to improve the parlous condition of the Scottish industrial and crofting areas.

Mr. C. W. ORR wondered whether the authors had time to investigate and correlate output with the power available per worker in industry. The Census of Production did not give the horse-power of motors available, but it did give the amount of electricity generated and purchased. It also gave the total fuel purchased, some of which might have been used for the generation of electricity or direct mechanical power or even process heat. Although there were difficulties in converting fuel and kilowatt-hours into "units of power," that difficulty did not appear insuperable when each industry was only compared with its own counterpart in Scotland. Such a correlation, if it existed, might throw a useful light on the different output per worker in Scotland and in England.

Dr. T. E. EASTERFIELD asked whether there were any differences in prices of goods as between England and Scotland. Since the comparison was on a financial basis, some of the differences might be due to a slightly lower wage and lower price of finished goods, which would give an apparently lower net output per head from the point of view of money, though not from the physical point of view.

In the cotton industry, as a result of historical accidents, two people doing work which was almost identical could produce similar results, but one would receive 25 per cent. or 50 per cent. more than the other. In a case like that the net output would appear to be very different, and the net output from the point of view of efficiency was a meaningless index.

He would like to query whether in some cases the observed correlation between number of non-operatives and productivity might not be due to the fact that the industry which paid better could support a greater number of people who were in fact not contributing very much to production. It had been commented that in the United States an industry which began to pay profits fairly handsomely frequently managed to find jobs for people in sales organization, administration and so on which, after a few years, were looked upon as a regular item of cost, and thus a large

CC-0. In Public Domain. Gurukul Kangri Collection, Haridwar

Digitized by Arya Samaj Foundation Chennai and eGangotri



number of "psychological" costs of industry were developed. Such "psychological" costs made profits a misleading index of efficiency. The correlation between number of non-operatives and productivity might in fact be due to the latter causing the former.

The CHAIRMAN, in concluding the discussion, added his own personal appreciation of the paper. The subject of the measurement of productivity of industrial workers attracted the attention of many people not engaged in industry, probably to some extent by the ease with which comparisons could apparently be made by the use of the "net output per person employed" figure in reports of censuses of production in different countries or in different industries or, as in the present case, different regions covered by one census. The notion of "net output per person employed" was a simple and attractive one, but it was the duty of statisticians to point out to the general reader of the reports of the censuses the pitfalls which lie in the use of the term. Many people, when making the comparisons, appeared to be under the impression that they were comparing the efficiency of some group or some industry with some other group or some other industry. Frequently they were not doing anything of the kind, as there were so many points of difference in the two groups which ought to be allowed for, but which often could not be allowed for, and the correction for these might well constitute the main part of the problem. Mr. Leser and his colleague had performed an important service in drawing attention to some of the points which should be taken into account.

The first of these related to the proportion of "non-operatives," as compared with "operatives," in the number of employed and the contribution which the non-operatives provided to the output. A lot could be said on that question and in a number of directions. These "non-operatives" might consist of different types of people. The types which Mr. Leser had chiefly in mind were the "backroom boys" who did research work or invented gadgets and did other things which stimulated the "workshop boys" to increased output; but the "non-operatives" often included other people who did not directly contribute to output, e.g. welfare and selling staff. The former type contributed to the numerator as well as to the denominator of the fraction expressing net output per employee, but the latter type contributed to the denominator only.

In the leather industry a substantial number of firms did not employ any people to sell their products, but handed them over to "factors" who were paid by commission on turnover and employed the staff necessary to distribute the goods. Other firms had their own selling staffs. The factor was not caught in the Census of Production net, so that the people he employed were not counted, whereas people doing similar work for the producers who were their own sellers were included. The net output per person employed in two firms turning out exactly the same goods might differ by 5 per cent. or more for this reason.

Another point to which Mr. Leser had drawn attention was the correlation between net output per employee and size of establishment. In the tables in the British Census Report there was for each industry one showing net output per employee for groups of firms of different sizes. The chief feature of those tables in general was the irregularity of the results disclosed. There were a number of industries where the net output per employee appeared to go up according to the size of the firm until the very big firms were reached and then there was a sharp drop. In the textile industries the relationship between the net output per employee and size was indicated by a U-shaped curve. The small firms had relatively high net output; this diminished with the medium sized firms and then went up again with the largest.

It was important that qualified people should be encouraged to undertake such work as Mr. Leser and his colleague had done. In the presence of Dr. C. O. George, who would be responsible for the tabulation of the results of the first post-war Census, he would like to suggest that special attention should be given to the form of the tabular matter in order that this could be made of the greatest possible use to research workers. In previous reports there was, for each industry, a table which, for various ranges of "size of establishment," gave figures of net output and also a column giving the number of operatives, excluding outworkers. If this table gave further details of the numbers employed, it would enable the research workers to throw more light upon the influence of outworkers and of non-operative workers. There might be other points which would suggest themselves to active research workers. In the past the reports had been drawn up with very little regard to any material which they might afford to research workers in the future. This aspect, however, he suggested, should now be prominently in the forefront of the minds of those responsible for deciding upon the form of tabulation.

The following comments were received in writing:

Dr. ISSERLIS: There is one possible contributory cause to the lower net output in Scotland. Overhead costs such as rent and rates may be lower. About fifty years ago the Thames Iron Works moved from London to the North of England because higher rates in the South made

CC-0. In Public Domain. Gurukul Kangri Collection, Haridwar

Digitized by Arya Samaj Foundation Chennai and eGangotri



shipbuilding and ship repairing more costly. Lower rents affect not only the factory or shipyard. They may account for agreed differential wages. I think compositors, for instance, receive lower wages in the provinces than in London for this reason. If these considerations are relevant, it might well happen that a Scotsman whose net output at home was £213 might migrate to England, do similar work, maintain the same standard of living but produce a net output valued at £225.

Mr. R. H. S. PHILLIPS: The authors of this paper have undoubtedly shown, not only the importance of their subject from a national point of view, in days of increasing production consciousness, but also the advantages of a comparative productivity analysis as between different areas. It may be hoped that their example will lead to similar analyses being undertaken for areas which are more comparable in size and population with Scotland than is England as a whole.

Two aspects of the subject which are revealed by the paper as being important, but which remain almost untouched by the statistical approach, are:

(*a*) The question of output in terms of volume rather than value. (This is only liable to statistical treatment as and when figures are available, separately, both for Scotland and for England, and it is particularly important in the case of types of output which vary in money value as between different areas.)

(*b*) The necessity for making allowance for and isolating those social and psychological factors which affect productivity more in any one part of a national economy than in other parts. Such factors are particularly vital to an analysis of productivity when it is known that any particular part of a national economy under scrutiny has been subject to special economic strains, abnormal depression or an undue preponderance of declining trades; things which, combined, affect the whole socio-economic atmosphere.

The effect of factors such as the above, although undoubtedly great, are, unfortunately, relatively imponderable from a statistical point of view. In consequence they have, perhaps, been rather too rapidly dismissed from the picture.

The paper will suggest to many people that there may be some advantage in making a clearer distinction between (*a*) differences in productivity between two areas which are due to the inherent productivity of particular industries dominant in a particular area, and (*b*) differences in productivity due rather to those characteristics which can be altered, such as efficiency, inefficiency, size, men/women employment ratios, operative/non-operative ratios, etc. etc. The importance of appreciating this distinction lies in the fact that there are some industries which show a higher man-hour productivity in terms of £ s. d., even when *inefficient*, than others are able to show even when they are *ideally efficient*. To allow for such industries, a correction should surely be made for the distribution, as between two areas under scrutiny, of inherently "high productivity" industries. In other words, before the analysis can be pressed forward in order to discover differences in productivity which are changeable and, therefore, important to unearth, i.e. differences due to non-inherent factors, it would be wise to discover to what extent the average net productivity in an area is essentially due to inherent factors. It is clear that when approaching the subject in this manner, the difference in structure between industries in two areas needs to be measured not only in terms of employment, but also in terms of some factor which measures the inherent difference of the industries involved with regard to their *potential* productivity.

The above comments are general ones, which there is not now time to expand, but the following further points might be made in regard to this very interesting and challenging paper.

In the first place, it is surely not satisfactory to dismiss the difference in price levels between Scotland and England as insignificant. The evidence on this point does not appear to justify an assumption of this kind. The whole issue raises the question of whether or not there is such a thing as an average price level. It is quite certain that price levels, at least in certain lines of production (even in these days of national trade union agreements, manufacturers' federation price agreements, etc.), are different in Scotland and England.

Another assumption made in this paper, that differences in the structure of industry due to specialization within one part of the country, tend to "cancel out" over the whole range of industries, is one of those over-simplifications which, if there are a number of them (over-simplifications) and they are all cancelled out in the same direction, may create a substantial error in the conclusion. Some attention should be paid to the fact that there are special lines of production, which in one part of a national economy are essentially quality lines, as distinct from mass production lines in another part. Scotland is famous for many quality lines of production—e.g. lace, certain types of knitted goods, whisky, beer, specialized engineering products, special types of shipping, etc. etc. Transport factors have dictated, in some cases, this quality specialization.

CC-0. In Public Domain. Gurukul Kangri Collection, Haridwar

Digitized by Arya Samaj Foundation Chennai and eGangotri



That section of this productivity analysis which dismisses the possibility of unemployment (and different working hours) invalidating or seriously modifying the conclusions appears to me to be the least convincing part of the paper.* A detailed analysis of differences in unemployment, not only between areas subject to analysis, but also between the industry groups within these areas, would be a useful refinement to this type of paper, if the indirect effect of unemployment upon productivity is acknowledged. By comparing average unemployment in Scotland with average unemployment in England, moreover, the important fact is ignored that if only 4 out of 26 counties in England are removed (in 1935) the average unemployment percentage is noticeably lowered (to below half that in Scotland).† The relatively high level of unemployment in Scotland in the period affecting these statistics must surely have had a substantial effect on the enterprise and energy of employed workers and managements, whereas the much lower level of unemployment in typical areas of England can scarcely have had any effect at all. Anybody who considers that working hours were substantially the same in Scotland as in England (on the average) is in danger of confusing the issue by ignoring the tremendous effect on average working hours (and productivity) in England which could be produced by the tremendously productive London and Birmingham areas *alone*. These areas enjoyed more or less full-time working, and also had a virtual monopoly of the expanding light industries. These factors altered the whole economic climate in most parts of England as compared with Scotland, and (as suggested in my opening remarks) it is these factors which merit far more "weight" in analyses of productivity than has hitherto been granted them.

In section 2 of the paper a very thorough statement is made, showing the effect of correcting the crude productivity figures for differences in industrial structure. I have already stated that the fact that this correction is made on the basis of employment only appears to be a limitation—though an inevitable one—in this analysis.

The authors of this paper qualify their conclusions at various points. For example, they suggest that the effect of restricting their analysis to 98 industries exaggerates the disparity between England and Scotland. The importance of this particular qualification does not alter the general validity of their conclusions, but when, in the paragraphs preceding Table VI, it is pointed out that a further diversifying of Scottish industry (viz. an expansion of the less developed trades in Scotland) would, *ceteris paribus*, *tend to extenuate the gap between English and Scottish productivity*, their qualification is surely far too weak. They say—"Nevertheless the development of these smaller industries might well be *accompanied by a rise in their output per head*." To this point should surely be added a further and more vital one: that *unless these smaller industries do expand*, there will be a danger of serious unemployment precisely because certain of the high productivity industries are *declining*—in terms of their long-term employment capacity, although not necessarily in terms of their output potential.

We cannot afford to ignore the lessons which statistics, properly understood and sensibly interpreted, can teach us about the relative efficiency of different industries in different areas. It is especially useful that an analysis such as this one by Dr. Singer and Mr. Leser should throw a spotlight on Scotland—including as that country does one of the Development Areas. Their paper tends to show how much, for the sake of increased productivity alone, this area stands to gain by the re-equipment and re-vitalization now proceeding. It might not be unwise to predict a substantial absolute and a small relative increase in the net output per head in Scotland by the time of the 1950 Census of Production.

Mr. LESER, in reply, thanked all those who had contributed to the discussion. He was very glad to have had the privilege of reading this paper. Dr. Singer, who did the pioneer work, was now in the United States, and he would reserve for both Dr. Singer and himself the right of answering in more detail in writing some of the points which were brought up in the discussion.

The authors subsequently wrote the following joint reply:

Dr. George, Dr. Rostas, Mr. Browne, Mr. Orr, Dr. Easterfield, Dr. Isserlis and Mr. Phillips suggested some alternative explanations for the difference between output per head in England

* It is fully realized that the Census of Production *excludes* "unemployed" persons, and only deals with "employed" persons in each industry.

† 1935. Unemployment %:

| | |
|---|---|
| The Clyde Valley area of Scotland (half population of Scotland) | 28·0% |
| Scotland | 23·0% |
| England | 13·9% |
| England (less Lancs, Cheshire, Northumberland and Durham) | 11·0% |

CC-0. In Public Domain. Gurukul Kangri Collection, Haridwar

Digitized by Arya Samaj Foundation Chennai and eGangotri



and Scotland. Since several of the points raised were made, from slightly different angles, by two or more speakers, we propose to reply to these contributions together.

Generally speaking, we agree that the question of alternative explanations, as advanced in the discussion, as well as the meaning of the correlations given in the paper, should be investigated further. Within the limits of practicability, such an investigation is now being undertaken. This applies in particular to the question of regional differences within England and Wales, or within Scotland. This analysis should give an indication of the effect of the London region on the English totals, and may also give some indirect evidence on the influence of general economic conditions in different regions.

An attempt to assess the influence of regional specialization between different sub-divisions of a trade is also being made. On another main point, the possible influence of systematic factors like price differences, accompanied by differences in wages or profits, it is more doubtful whether much information can be obtained; the 1935 Census material does not seem to be very suitable for inter-regional physical comparisons. It is to be hoped that on the basis of future Census publications, a fuller analysis will be possible. With the Chairman's suggestions regarding tabulation of the Census results, we heartily agree.

The difference in the proportions of outworkers employed in the two countries, which was pointed out here, does seem to explain part of the difference in average output per head, although a small one.

A provisional analysis did not suggest a connection between electricity consumption and output in the country, but this result may have been influenced by the weighting method adopted, and is open to revision.

It is possible—although there is some evidence against this view—that the proportion of all, rather than male, non-operatives is the significant variate in the correlation with output per head. In this case, we do not obtain an explanation for the difference between average output per head in England and Scotland, since the proportion of all non-operatives is practically the same in both countries. But we shall still find that the favourable results in each country tend to be concentrated in those industries in which the proportion of non-operatives, as well as the average size of firm, is high. Of course, a causal connection between these factors, one way or the other, cannot be proved.

Mr. Lyle suggested the "productivity ratio" as an additional measure. An analysis of this ratio would certainly bring out some interesting points, though not necessarily with regard to productivity.

Some of the points raised by Mr. Blacklock may be briefly answered as follows:

The statement that employment was more evenly distributed in England than in Scotland referred to the industrial distribution of England and Wales as a whole, not of individual English regions. The choice of the best weights is a tricky problem; the British weights would, of course, be far nearer to the English than to the Scottish weights, and for this reason the English weights were thought to be more reliable. The fact that in 69 out of 98 trades, English output per head exceeds that of Scotland, provides strong evidence for the view that the difference is due to systematic and not to random factors; it is not claimed to provide a quantitative measure for the difference.

As a result of the ballot taken during the meeting, the candidates named below were elected Fellows of the Society:

Patricia Edna Barber.
Donald Gordon Beech.
Joseph Berkson.
Jack Carreyette.
Jose Augusto Coll.
George Guthrie Dewsbury.
George Ashton Hatley.
John Charles Hobbs.
William Owen Jones.
Edward Walter Gordon Knight.
George Michael Kuznets.
David Wallace Giles Millar.
George F. Mostowy.
Alan Robertson.
David Sachs.
Ernest Rayner Thornley.
George Wray.
Joseph Douglas Whitell.

CC-0. In Public Domain. Gurukul Kangri Collection, Haridwar

Digitized by Arya Samaj Foundation Chennai and eGangotri



## Wholesale Prices in 1947

By the Editor of "The Statist"

### Table I

The Statist's *Annual Index Numbers (in continuation of Sauerbeck's figures)* (1867–77 = 100)

| Year | Average No. | Year | Average No. | Year | Average No. | Year | Average No. | Year | Average No. |
|---|---|---|---|---|---|---|---|---|---|
| 1947 | 230 | 1926 | 125 | 1905 | 72 | 1884 | 76 | 1863 | 103 |
| '46 | 186 | '25 | 136 | '04 | 70 | '83 | 82 | '62 | 101 |
| '45 | 164 | '24 | 139 | '03 | 69 | '82 | 84 | '61 | 98 |
| '44 | 160 | '23 | 128 | '02 | 69 | '81 | 85 | '60 | 99 |
| '43 | 155 | '22 | 131 | '01 | 70 | '80 | 88 | '59 | 94 |
| '42 | 151 | '21 | 155 | '00 | 75 | '79 | 83 | '58 | 91 |
| '41 | 142 | '20 | 251 | 1899 | 68 | '78 | 87 | '57 | 105 |
| '40 | 128 | '19 | 206 | '98 | 64 | '77 | 94 | '56 | 101 |
| '39 | 94 | '18 | 192 | '97 | 62 | '76 | 95 | '55 | 101 |
| '38 | 90 | '17 | 175 | '96 | 61 | '75 | 96 | '54 | 102 |
| '37 | 102 | '16 | 136 | '95 | 62 | '74 | 102 | '53 | 95 |
| '36 | 88 | '15 | 108 | '94 | 63 | '73 | 111 | '52 | 78 |
| '35 | 83 | '14 | 85 | '93 | 68 | '72 | 109 | '51 | 75 |
| '34 | 81 | '13 | 85 | '92 | 68 | '71 | 100 | '50 | 77 |
| '33 | 78 | '12 | 85 | '91 | 72 | '70 | 96 | '49 | 74 |
| '32 | 79 | '11 | 80 | '90 | 72 | '69 | 98 | '48 | 78 |
| '31 | 82 | '10 | 78 | '89 | 72 | '68 | 99 | '47 | 95 |
| '30 | 96 | '09 | 74 | '88 | 70 | '67 | 100 | '46 | 89 |
| '29 | 114 | '08 | 73 | '87 | 68 | '66 | 102 | '18 | 159* |
| '28 | 119 | '07 | 80 | '86 | 69 | '65 | 101 | '10 | 171* |
| '27 | 122 | '06 | 77 | '85 | 72 | '64 | 105 | | |

* Jevons's numbers adjusted.

### Table II

The Statist's *Annual Index Numbers—ten-year averages* (1867–77)

| | | | |
|---|---|---|---|
| 1848–1857 = 89 | 1899–1908 = 72 | 1913–1922 = 153 | 1927–1936 = 95 |
| '58– '67 = 99 | 1900– '09 = 73 | '14– '23 = 157 | '28– '37 = 93 |
| '68– '77 = 100 | '01– '10 = 73 | '15– '24 = 162 | '29– '38 = 90 |
| '78– '87 = 79 | '02– '11 = 74 | '16– '25 = 165 | '30– '39 = 88 |
| '88– '97 = 67 | '03– '12 = 76 | '17– '26 = 164 | '31– '40 = 91 |
| '90– '99 = 66 | '04– '13 = 77 | '18– '27 = 159 | '32– '41 = 97 |
| '91–1900 = 66 | '05– '14 = 79 | '19– '28 = 152 | '33– '42 = 104 |
| '92– '01 = 66 | '06– '15 = 82 | '20– '29 = 142 | '34– '43 = 111 |
| '93– '02 = 66 | '07– '16 = 88 | '21– '30 = 127 | '35– '44 = 119 |
| '94– '03 = 66 | '08– '17 = 98 | '22– '31 = 120 | '36– '45 = 127 |
| '95– '04 = 67 | '09– '18 = 110 | '23– '32 = 115 | '37– '46 = 137 |
| '96– '05 = 68 | '10– '19 = 123 | '24– '33 = 110 | '38– '47 = 150 |
| '97– '06 = 70 | '11– '20 = 146 | '25– '34 = 104 | |
| '98– '07 = 71 | '12– '21 = 148 | '26– '35 = 99 | |

CC-0. In Public Domain. Gurukul Kangri Collection, Haridwar

Digitized by Arya Samaj Foundation Chennai and eGangotri



*Monthly Fluctuations of the Index Numbers * of 45 Commodities, 1867–77 = 100*

| | Jan. | Feb. | Mar. | April | May | June | July | Aug. | Sept. | Oct. | Nov. | Dec. | Year |
|---|---|---|---|---|---|---|---|---|---|---|---|---|---|
| 1898 . . | 62·8 | 63·4 | 63·0 | 65·5 | 66·4 | 64·7 | 64·3 | 64·0 | 63·9 | 63·6 | 63·9 | 63·8 | 64 |
| 1901 . . | 72·2 | 71·7 | 71·0 | 70·6 | 70·5 | 69·8 | 69·5 | 69·8 | 69·6 | 69·6 | 69·0 | 68·4 | 70 |
| '02 . . | 68·8 | 68·9 | 69·2 | 69·7 | 70·9 | 70·4 | 70·0 | 69·5 | 69·3 | 68·8 | 68·6 | 69·1 | 69 |
| '03 . . | 69·5 | 70·2 | 70·4 | 69·4 | 69·6 | 69·5 | 69·5 | 70·0 | 69·1 | 69·0 | 69·0 | 70·0 | 69 |
| 1904 . . | 70·4 | 70·8 | 70·8 | 70·5 | 69·9 | 69·4 | 69·9 | 70·4 | 70·7 | 71·0 | 71·2 | 70·9 | 70 |
| '05 . . | 71·2 | 71·4 | 71·8 | 72·0 | 71·7 | 72·0 | 72·5 | 72·3 | 72·4 | 73·2 | 74·2 | 74·9 | 72 |
| '06 . . | 75·2 | 75·0 | 75·7 | 76·5 | 77·0 | 76·9 | 76·4 | 76·7 | 77·5 | 78·5 | 78·6 | 79·7 | 77 |
| '07 . . | 80·0 | 80·7 | 80·0 | 80·7 | 82·4 | 82·0 | 81·1 | 79·4 | 79·1 | 78·8 | 76·7 | 76·2 | 80 |
| '08 . . | 76·0 | 74·5 | 74·1 | 73·8 | 73·6 | 72·9 | 73·1 | 72·2 | 72·5 | 72·2 | 72·2 | 72·3 | 73 |
| 1909 . . | 72·0 | 71·9 | 72·4 | 74·3 | 75·4 | 75·1 | 75·2 | 74·9 | 74·7 | 75·2 | 75·5 | 76·3 | 74 |
| '10 . . | 77·1 | 78·1 | 79·1 | 78·5 | 78·2 | 76·9 | 78·1 | 78·2 | 77·6 | 77·2 | 77·8 | 77·9 | 78 |
| '11 . . | 78·5 | 78·6 | 78·9 | 80·0 | 80·3 | 80·0 | 78·9 | 79·5 | 80·3 | 80·7 | 80·6 | 80·9 | 80 |
| '12 . . | 81·8 | 82·9 | 84·4 | 85·0 | 85·3 | 85·5 | 86·5 | 85·9 | 86·7 | 85·8 | 85·3 | 86·4 | 85 |
| '13 . . | 86·4 | 86·1 | 86·7 | 86·2 | 85·7 | 84·1 | 84·2 | 85·0 | 85·7 | 84·5 | 83·3 | 83·8 | 85 |
| 1914 . . | 83·5 | 83·8 | 82·8 | 82·3 | 82·3 | 81·2 | 82·4 | 87·9 | 89·3 | 89·8 | 88·8 | 91·6 | 85 |
| '15 . . | 96·4 | 100·9 | 103·7 | 105·9 | 107·2 | 106·4 | 106·4 | 107·0 | 107·8 | 110·0 | 113·1 | 118·4 | 108 |
| '16 . . | 123·6 | 127·0 | 130·4 | 134·2 | 135·4 | 131·0 | 130·5 | 134·5 | 134·4 | 141·5 | 150·8 | 154·3 | 136 |
| '17 . . | 159·3 | 164·0 | 169·0 | 173·0 | 175·0 | 180·4 | 176·9 | 175·7 | 176·4 | 180·6 | 182·9 | 185·1 | 175 |
| '18 . . | 186·2 | 187·3 | 188·0 | 189·8 | 191·1 | 192·3 | 192·9 | 195·9 | 197·1 | 197·8 | 195·3 | 196·0 | 192 |
| 1919 . . | 192·1 | 187·5 | 184·7 | 184·6 | 194·6 | 199·4 | 206·4 | 212·7 | 214·8 | 224·3 | 231·0 | 235·2 | 206 |
| '20 . . | 245·3 | 260·4 | 261·8 | 266·1 | 260·0 | 255·7 | 254·6 | 253·5 | 248·7 | 239·9 | 223·8 | 207·2 | 251 |
| '21 . . | 197·2 | 183·0 | 177·2 | 169·8 | 162·2 | 155·8 | 158·2 | 154·3 | 149·4 | 138·4 | 136·7 | 133·6 | 155 |
| '22 . . | 132·5 | 132·2 | 133·3 | 134·8 | 135·5 | 135·6 | 134·0 | 129·6 | 127·9 | 130·1 | 130·6 | 129·1 | 131 |
| '23 . . | 130·2 | 131·9 | 132·7 | 134·0 | 132·2 | 127·9 | 124·8 | 125·0 | 127·8 | 127·7 | 132·4 | 133·2 | 128 |
| 1924 . . | 137·2 | 138·8 | 137·0 | 136·8 | 136·4 | 136·3 | 138·4 | 138·0 | 141·3 | 146·1 | 145·5 | 147·7 | 139 |
| '25 . . | 144·8 | 143·1 | 140·1 | 137·5 | 135·7 | 131·2 | 134·3 | 134·3 | 132·7 | 130·2 | 132·9 | 130·4 | 136 |
| '26 . . | 129·3 | 127·9 | 126·1 | 125·5 | 125·7 | 124·9 | 126·0 | 127·0 | 128·0 | 131·0 | 130·8 | 123·9 | 125 |
| '27 . . | 123·1 | 124·1 | 123·6 | 123·3 | 123·8 | 123·1 | 122·0 | 122·8 | 121·5 | 120·6 | 121·5 | 121·4 | 122 |
| '28 . . | 120·9 | 121·1 | 123·6 | 125·6 | 126·2 | 122·6 | 120·3 | 118·0 | 116·8 | 116·8 | 117·9 | 117·9 | 119 |
| 1929 . . | 117·0 | 120·1 | 120·5 | 116·5 | 113·0 | 113·1 | 115·2 | 113·9 | 112·6 | 111·1 | 108·3 | 108·8 | 114 |
| '30 . . | 106·6 | 104·8 | 103·0 | 101·5 | 98·8 | 95·8 | 94·4 | 92·2 | 90·8 | 90·4 | 88·6 | 86·9 | 96 |
| '31 . . | 85·7 | 85·5 | 85·5 | 84·4 | 82·2 | 82·6 | 80·2 | 79·1 | 80·7 | 82·3 | 83·0 | 85·4 | 82 |
| '32 . | 84·7 | 86·7 | 84·1 | 82·5 | 80·2 | 77·0 | 78·9 | 80·7 | 80·4 | 77·8 | 77·9 | 77·7 | 79 |
| '33 . . | 77·8 | 77·0 | 77·0 | 78·5 | 80·9 | 81·3 | 81·7 | 81·2 | 80·7 | 80·5 | 79·3 | 80·0 | 78 |
| 1934 . . | 82·5 | 82·5 | 82·2 | 81·0 | 81·1 | 80·7 | 82·4 | 83·4 | 82·1 | 81·1 | 81·0 | 82·8 | 81 |
| '35 . . | 83·6 | 83·4 | 82·9 | 84·1 | 85·2 | 83·7 | 84·3 | 84·1 | 85·1 | 85·8 | 86·3 | 86·7 | 83 |
| '36 . . | 87·1 | 87·1 | 86·7 | 86·2 | 85·6 | 84·8 | 87·1 | 89·0 | 90·4 | 91·7 | 94·5 | 98·9 | 88 |
| '37 . . | 99·6 | 102·1 | 107·3 | 104·7 | 106·2 | 104·7 | 105·9 | 104·4 | 103·3 | 100·8 | 96·7 | 97·3 | 102 |
| '38 . . | 96·5 | 96·4 | 94·2 | 93·5 | 91·4 | 91·4 | 91·1 | 88·6 | 88·6 | 88·8 | 87·4 | 89·1 | 90 |
| 1939 . . | 88·7 | 88·6 | 89·0 | 90·5 | 90·6 | 90·6 | 88·7 | 90·4 | 99·7 | 105·8 | 112·2 | 120·1 | 94 |
| '40 . . | 124·1 | 124·5 | 123·4 | 126·0 | 128·0 | 130·0 | 129·5 | 131·5 | 131·6 | 131·8 | 132·7 | 134·5 | 128 |
| '41 . . | 134·9 | 136·3 | 138·0 | 141·1 | 143·5 | 144·4 | 145·3 | 145·1 | 145·5 | 143·7 | 145·5 | 146·5 | 142 |
| '42 . . | 148·6 | 153·4 | 153·5 | 154·5 | 156·6 | 154·4 | 150·0 | 149·4 | 149·7 | 150·4 | 151·3 | 152·2 | 151 |
| '43 . . | 153·3 | 153·2 | 154·0 | 154·9 | 155·6 | 155·4 | 156·0 | 154·4 | 154·6 | 153·7 | 153·9 | 153·9 | 155 |
| 1944 . . | 154·9 | 155·1 | 155·7 | 157·9 | 159·5 | 160·0 | 161·9 | 161·5 | 160·1 | 159·6 | 160·3 | 160·7 | 160 |
| '45 . . | 161·4 | 161·5 | 162·1 | 162·4 | 164·0 | 166·7 | 165·2 | 163·3 | 162·7 | 162·7 | 162·7 | 163·2 | 164 |
| '46 . . | 165·6 | 166·2 | 166·6 | 168·4 | 169·3 | 169·7 | 174·4 | 175·7 | 180·5 | 196·2 | 198·1 | 200·5 | 186 |
| '47 . . | 206·7 | 209·6 | 212·1 | 215·9 | 216·5 | 218·1 | 223·4 | 225·9 | 228·9 | 236·0 | 240·8 | 246·5 | 230 |
| '48 . . | 250·5 | 253·4 | 256·0 | 256·4 | 260·0 | 263·9 | 260·4 | 260·1 | 258·1 | 261·5 | 263·8 | 266·0 | |

* The average of the twelve monthly figures of each year does not necessarily coincide with the annual figures, as the latter are calculated mostly from the average of 52 weekly quotations, while the former are based on end-of-the-month prices.

CC-0. In Public Domain. Gurukul Kangri Collection, Haridwar

Digitized by Arya Samaj Foundation Chennai and eGangotri



*Summary of Index Numbers. Groups of Articles, 1867–77 = 100*

| | Vegetable Food (Corn, etc.) | Animal Food (Meat, etc.) | Sugar, Coffee, and Tea | Total Food | Minerals | Textiles | Sundry Materials | Total Materials | Grand Total | Silver* | Wheat Harvest † | Average Price of Consols ‡ | Average Bank of England Rate ‡ |
|---|---|---|---|---|---|---|---|---|---|---|---|---|---|
| | | | | | | | | | | | | £ | % |
| 1873 | 106 | 109 | 106 | 107 | 141 | 103 | 106 | 114 | **111** | 97·4 | 80 | 92½ | 4·750 |
| 1896 | 53 | 73 | 59 | 62 | 63 | 54 | 63 | 60 | **61** | 50·5 | 112 | 110¾ | 2·483 |
| 1911 | 70 | 90 | 61 | 75 | 93 | 76 | 81 | 83 | **80** | 40·4 | 110 | 79 5/16 | 3·467 |
| 1919 | 179 | 213 | 147 | 185 | 220 | 228 | 219 | 222 | **206** | 85·3 | 98 | 54 1/16 | 5·166 |
| '20 | 227 | 263 | 198 | 234 | 295 | 262 | 244 | 264 | **251** | 76·1 | 96 | 47 7/16 | 6·71 |
| '21 | 143 | 218 | 83 | 158 | 181 | 140 | 145 | 153 | **155** | 48·1 | 118 | 47 3/16 | 6·092 |
| 1922 | 107 | 184 | 82 | 130 | 142 | 134 | 122 | 131 | **131** | 51·6 | 105 | 56 1/16 | 3·692 |
| '23 | 98 | 162 | 101 | 122 | 155 | 140 | 115 | 133 | **128** | 49·4 | 105 | 57 3/16 | 3·496 |
| '24 | 119 | 158 | 105 | 130 | 158 | 170 | 119 | 145 | **139** | 50·7 | 107 | 56 3/16 | 4·0 |
| '25 | 118 | 162 | 89 | 128 | 154 | 165 | 117 | 142 | **136** | 52·5 | 114 | 56¾ | 4·575 |
| '26 | 108 | 150 | 88 | 119 | 154 | 133 | 112 | 130 | **125** | 47·1 | 99 | 54 3/16 | 5·0 |
| 1927 | 108 | 138 | 83 | 114 | 141 | 131 | 116 | 127 | **122** | 42·8 | 109 | 54 3/16 | 4·650 |
| '28 | 107 | 142 | 78 | 114 | 123 | 136 | 114 | 123 | **119** | 44·0 | 109 | 55 1/16 | 4·5 |
| '29 | 99 | 146 | 72 | 110 | 126 | 122 | 108 | 117 | **114** | 40·2 | 114 | 54 7/16 | 5·508 |
| '30 | 77 | 142 | 54 | 96 | 112 | 84 | 94 | 96 | **96** | 29·0 | 99 | 56 | 3·4 |
| '31 | 68 | 119 | 50 | 83 | 100 | 63 | 81 | 80 | **82** | 20·4 | 99 | 55 3/16 | 3·975 |
| 1932 | 72 | 105 | 50 | 79 | 99 | 64 | 78 | 80 | **79** | 19·5 | 105 | 66 5/16 | 3·017 |
| '33 | 60 | 106 | 47 | 74 | 107 | 67 | 76 | 82 | **78** | 18·7 | 114 | 73 5/16 | 2·0 |
| '34 | 63 | 108 | 50 | 77 | 109 | 72 | 76 | 84 | **81** | 20·0 | 120 | 80 5/16 | 2·0 |
| '35 | 66 | 107 | 42 | 76 | 112 | 80 | 79 | 88 | **83** | 26·4 | 112 | 86½ | 2·0 |
| '36 | 76 | 109 | 41 | 81 | 118 | 83 | 84 | 93 | **88** | 18·5 | 100 | 85 1/16 | 2·0 |
| 1937 | 93 | 117 | 49 | 93 | 142 | 93 | 98 | 109 | **102** | 18·4 | 99 | 76 3/16 | 2·0 |
| '38 | 81 | 111 | 43 | 84 | 136 | 75 | 83 | 95 | **90** | 17·6 | 122 | 74 5/16 | 2·0 |
| '39 | 74 | 115 | 47 | 83 | 137 | 93 | 88 | 102 | **94** | 17·1 | 112 | 66 3/16 | 2·5 |
| '40 | 112 | 141 | 58 | 111 | 167 | 149 | 117 | 140 | **128** | 17·1 | 108 | 72 5/16 | 2·0 |
| '41 | 140 | 142 | 65 | 125 | 181 | 162 | 131 | 154 | **142** | 18·0 | 109 | 79 1/16 | 2·0 |
| 1942 | 170 | 148 | 66 | 140 | 184 | 163 | 142 | 160 | **151** | 18·1 | 123 | 82 5/16 | 2·0 |
| '43 | 156 | 156 | 72 | 138 | 187 | 166 | 156 | 167 | **155** | 18·1 | 123 | 80¾ | 2·0 |
| '44 | 152 | 156 | 73 | 137 | 197 | 182 | 161 | 178 | **160** | 18·1 | 121 | 80 1/16 | 2·0 |
| '45 | 155 | 156 | 78 | 139 | 209 | 189 | 159 | 182 | **164** | 23·1 | — | 87 1/16 | 2·0 |
| '46 | 155 | 154 | 88 | 140 | 239 | 231 | 198 | 219 | **186** | 36·7 | — | 95 1/16 | 2·0 |
| '47 | 191 | 149 | 100 | 156 | 304 | 295 | 263 | 284 | **230** | 33·3 | — | 89½ | 2·0 |
| Average 1904–13 | 68 | 91 | 53 | 73 | 95 | 74 | 76 | 81 | **77** | 44·1 | 106 | 82 5/16 | 3·733 |
| 1890–99 | 61 | 80 | 63 | 68 | 71 | 56 | 66 | 64 | **66** | 55·8 | 103 | 103 1/16 | 2·958 |
| '78–87 | 79 | 95 | 76 | 84 | 73 | 71 | 81 | 76 | **79** | 82·1 | 97 | 99 9/16 | 3·264 |
| 1818–27 | 109 | 90 | 151 | 111 | 128 | 105 | 106 | 112 | **111** | 98·0 | — | — | 3·692 |

* Silver (see note on p. 386), parity of 1 gold to 15½ silver = 100.
† Wheat harvest in U.K. to 1895: 29 bushels = 100; from 1896: 30 bushels = 100.
‡ Average price of Consols and the average Bank of England rate of discount are actual figures, not index-numbers; Consols 3% to 1888, 2¾% from 1889, 2½% from April, 1903.

CC-0. In Public Domain. Gurukul Kangri Collection, Haridwar

Digitized by Arya Samaj Foundation Chennai and eGangotri



THE STATIST'S *Index Numbers—monthly average by groups*, 1867–77 = 100

| | Vegetable Food | Animal Food | Sugar, Tea, and Coffee | Food-stuffs | Minerals | Textiles | Sundry Materials | Total Materials | All Commodities |
|---|---|---|---|---|---|---|---|---|---|
| 1945 | | | | | | | | | |
| Jan. | 153·8 | 155·7 | 73·8 | 137·6 | 203·4 | 185·5 | 158·2 | 178·8 | 161·4 |
| Feb. | 154·2 | 155·7 | 73·2 | 137·7 | 204·4 | 185·5 | 157·9 | 178·9 | 161·5 |
| Mar. | 156·3 | 155·7 | 74·2 | 138·8 | 206·6 | 187·0 | 155·9 | 179·1 | 162·1 |
| April | 153·0 | 155·7 | 74·5 | 137·5 | 205·5 | 189·7 | 158·3 | 180·7 | 162·4 |
| May | 158·3 | 155·7 | 74·8 | 139·8 | 209·1 | 189·8 | 158·3 | 181·6 | 164·0 |
| June | 170·1 | 155·7 | 74·4 | 144·6 | 213·5 | 189·8 | 158·4 | 182·9 | 166·7 |
| July | 162·3 | 155·7 | 72·2 | 140·9 | 213·5 | 189·8 | 158·4 | 182·9 | 165·2 |
| Aug. | 155·5 | 155·7 | 74·6 | 138·5 | 211·9 | 189·6 | 155·8 | 181·3 | 163·3 |
| Sept. | 154·4 | 155·7 | 74·6 | 138·1 | 212·0 | 189·6 | 154·3 | 180·7 | 162·7 |
| Oct. | 154·1 | 155·7 | 73·5 | 137·8 | 212·3 | 190·1 | 154·2 | 180·9 | 162·7 |
| Nov. | 155·0 | 155·7 | 74·5 | 138·3 | 212·6 | 190·0 | 153·0 | 180·4 | 162·7 |
| Dec. | 155·0 | 155·7 | 75·3 | 138·5 | 211·5 | 190·0 | 155·6 | 181·2 | 163·2 |
| 1946 | | | | | | | | | |
| Jan. | 155·4 | 155·7 | 77·8 | 139·2 | 225·8 | 190·4 | 155·0 | 184·6 | 165·6 |
| Feb. | 155·6 | 155·7 | 79·6 | 139·6 | 225·5 | 192·0 | 155·4 | 185·5 | 166·2 |
| Mar. | 156·1 | 155·7 | 78·5 | 139·6 | 225·3 | 192·0 | 157·2 | 186·3 | 166·6 |
| April | 157·9 | 155·7 | 78·5 | 140·4 | 230·6 | 192·0 | 160·1 | 188·8 | 168·4 |
| May | 156·7 | 153·6 | 82·3 | 139·9 | 230·6 | 196·1 | 161·4 | 190·7 | 169·3 |
| June | 157·0 | 153·6 | 82·1 | 140·0 | 231·6 | 197·2 | 161·4 | 191·4 | 169·7 |
| July | 160·7 | 153·6 | 84·2 | 141·9 | 241·3 | 207·7 | 163·7 | 198·1 | 174·4 |
| Aug. | 153·1 | 154·7 | 85·2 | 139·4 | 247·5 | 209·1 | 167·7 | 201·9 | 175·7 |
| Sept. | 154·2 | 154·7 | 84·0 | 139·6 | 256·7 | 218·1 | 175·3 | 210·3 | 180·5 |
| Oct. | 154·4 | 154·7 | 85·9 | 140·1 | 257·8 | 269·5 | 200·6 | 237·2 | 196·2 |
| Nov. | 151·6 | 154·7 | 85·6 | 138·8 | 261·7 | 271·7 | 206·4 | 241·4 | 198·1 |
| Dec. | 152·9 | 154·7 | 89·2 | 140·1 | 263·1 | 275·7 | 210·6 | 244·2 | 200·5 |
| 1947 | | | | | | | | | |
| Jan. | 156·0 | 154·7 | 91·1 | 141·9 | 277·5 | 287·6 | 215·1 | 254·2 | 206·7 |
| Feb. | 156·0 | 154·7 | 92·0 | 142·0 | 280·1 | 287·6 | 224·8 | 258·9 | 209·6 |
| Mar. | 156·1 | 154·7 | 91·2 | 141·9 | 291·0 | 284·9 | 230·4 | 263·5 | 212·1 |
| April | 157·3 | 154·7 | 93·7 | 143·0 | 289·7 | 284·1 | 245·5 | 269·2 | 215·9 |
| May | 158·1 | 148·1 | 101·0 | 142·4 | 288·4 | 285·1 | 249·0 | 270·7 | 216·5 |
| June | 173·5 | 148·1 | 99·4 | 148·6 | 288·7 | 284·2 | 245·1 | 268·9 | 218·1 |
| July | 182·0 | 148·1 | 100·9 | 152·3 | 293·1 | 292·9 | 251·0 | 275·2 | 223·4 |
| Aug. | 188·5 | 148·1 | 102·4 | 155·5 | 293·3 | 297·1 | 253·0 | 277·4 | 225·9 |
| Sept. | 190·9 | 144·0 | 103·2 | 155·1 | 299·9 | 303·9 | 256·8 | 282·9 | 228·9 |
| Oct. | 196·5 | 144·0 | 102·9 | 157·5 | 311·2 | 320·7 | 262·6 | 293·6 | 236·0 |
| Nov. | 201·8 | 144·0 | 104·1 | 160·0 | 315·9 | 328·2 | 269·2 | 299·9 | 240·8 |
| Dec. | 204·2 | 144·0 | 102·1 | 160·5 | 340·9 | 333·2 | 271·6 | 309·2 | 246·5 |
| 1948 | | | | | | | | | |
| Jan. | 207·5 | 146·1 | 100·0 | 162·3 | 350·8 | 334·5 | 278·2 | 315·0 | 250·5 |
| Feb. | 207·7 | 155·3 | 101·5 | 166·0 | 356·4 | 335·3 | 279·4 | 317·3 | 253·4 |
| Mar. | 210·4 | 155·3 | 108·5 | 168·7 | 359·5 | 338·7 | 280·7 | 319·8 | 256·0 |
| April | 210·0 | 155·3 | 105·7 | 168·0 | 360·2 | 342·6 | 280·6 | 321·1 | 256·4 |
| May | 211·4 | 155·3 | 103·4 | 168·0 | 359·4 | 364·4 | 279·6 | 327·2 | 260·0 |
| June | 225·1 | 155·3 | 105·8 | 174·3 | 367·8 | 363·4 | 280·2 | 329·4 | 263·9 |
| July | 214·6 | 155·3 | 106·9 | 170·1 | 367·6 | 355·1 | 279·1 | 326·4 | 260·4 |
| Aug. | 217·2 | 155·3 | 107·8 | 171·4 | 366·9 | 350·6 | 279·7 | 325·0 | 260·1 |
| Sept. | 217·1 | 155·3 | 105·5 | 170·9 | 367·3 | 345·0 | 275·9 | 321·8 | 258·1 |
| Oct. | 217·7 | 155·3 | 110·6 | 172·2 | 385·1 | 342·9 | 278·1 | 326·8 | 261·5 |
| Nov. | 222·5 | 155·3 | 112·2 | 174·5 | 384·9 | 348·4 | 279·3 | 329·0 | 263·8 |
| Dec. | 221.8 | 155.3 | 114.7 | 174.8 | 384.7 | 357.0 | 281.8 | 332.6 | 266·0 |

CC-0. In Public Domain. Gurukul Kangri Collection, Haridwar

Digitized by Arya Samaj Foundation Chennai and eGangotri



## *Quarterly Movements of Prices* *

*Summary of Index Numbers*, 1867–77 = 100

| Years | Quarters | Vegetable Food (Corn, etc.) | Animal Food (Meat, etc.) | Sugar, Coffee, and Tea | Total Food | Minerals | Textiles | Sundry Materials | Total Materials | Grand Total | Silver † |
|---|---|---|---|---|---|---|---|---|---|---|---|
| '36 | I | 72·1 | 104·6 | 41·2 | 77·6 | 116·1 | 84·6 | 86·4 | 93·8 | **87·0** | 18·2 |
| | II | 71·2 | 107·1 | 39·7 | 77·8 | 114·7 | 79·4 | 84·8 | 91·2 | **85·5** | 18·6 |
| | III | 75·3 | 112·6 | 39·1 | 81·5 | 116·7 | 80·5 | 90·0 | 94·2 | **88·8** | 18·6 |
| | IV | 85·8 | 110·7 | 42·6 | 85·9 | 129·6 | 88·2 | 93·8 | 101·7 | **95·0** | 18·9 |
| '37 | I | 93·1 | 112·7 | 47·1 | 90·6 | 144·3 | 97·4 | 102·3 | 112·0 | **103·0** | 18·6 |
| | II | 94·3 | 121·0 | 49·6 | 94·7 | 143·5 | 99·9 | 102·9 | 112·8 | **105·2** | 18·7 |
| | III | 93·3 | 121·4 | 50·2 | 94·6 | 147·7 | 94·6 | 101·4 | 111·8 | **104·5** | 18·4 |
| | IV | 95·5 | 116·3 | 47·2 | 93·0 | 136·3 | 81·2 | 95·6 | 102·1 | **98·3** | 18·0 |
| '38 | I | 92·3 | 116·4 | 43·1 | 90·8 | 134·8 | 77·8 | 92·4 | 99·3 | **95·7** | 18·5 |
| | II | 89·2 | 114·1 | 42·2 | 88·5 | 132·0 | 73·5 | 86·5 | 94·8 | **92·1** | 17·4 |
| | III | 78·0 | 107·4 | 42·9 | 81·4 | 135·9 | 73·9 | 85·0 | 95·3 | **89·4** | 17·3 |
| | IV | 68·8 | 105·8 | 43·3 | 77·1 | 140·6 | 74·3 | 85·1 | 96·7 | **88·4** | 17·4 |
| '39 | I | 68·0 | 110·9 | 43·5 | 78·7 | 134·2 | 79·6 | 84·0 | 96·2 | **88·8** | 17·7 |
| | II | 66·7 | 112·9 | 46·9 | 79·6 | 134·4 | 85·7 | 85·3 | 98·7 | **90·6** | 17·3 |
| | III | 65·2 | 117·0 | 48·1 | 80·7 | 135·8 | 91·1 | 88·0 | 101·8 | **92·9** | 15·7 |
| | IV | 93·2 | 130·3 | 57·4 | 99·3 | 146·7 | 123·5 | 106·4 | 122·5 | **112·7** | 17·8 |
| '40 | I | 104·2 | 141·2 | 57·4 | 108·0 | 160·1 | 141·2 | 116·1 | 135·6 | **124·0** | 16·3 |
| | II | 108·0 | 140·5 | 56·7 | 109·2 | 165·2 | 148·4 | 122·2 | 141·8 | **128·0** | 16·7 |
| | III | 117·3 | 140·5 | 58·6 | 113·5 | 171·1 | 148·6 | 122·2 | 143·4 | **130·9** | 17·6 |
| | IV | 127·5 | 140·5 | 58·8 | 117·8 | 173·5 | 151·9 | 119·8 | 144·1 | **133·0** | 17·9 |
| '41 | I | 129·8 | 141·3 | 61·9 | 119·8 | 179·0 | 154·8 | 124·7 | 148·6 | **136·4** | 18·0 |
| | II | 137·9 | 142·8 | 65·3 | 124·4 | 181·2 | 161·6 | 137·2 | 156·6 | **143·0** | 18·0 |
| | III | 145·0 | 142·8 | 65·4 | 127·4 | 181·0 | 165·6 | 138·5 | 158·3 | **145·3** | 18·0 |
| | IV | 151·0 | 142·8 | 68·9 | 130·7 | 181·6 | 163·1 | 134·2 | 155·8 | **145·2** | 18·1 |
| '42 | I | 179·6 | 144·3 | 69·3 | 143·4 | 181·6 | 161·1 | 140·6 | 157·9 | **151·8** | 18·1 |
| | II | 188·6 | 147·3 | 69·5 | 148·3 | 182·2 | 160·4 | 146·1 | 160·2 | **155·2** | 18·1 |
| | III | 158·4 | 147·3 | 71·4 | 136·0 | 185·8 | 158·3 | 144·1 | 159·7 | **149·7** | 18·1 |
| | IV | 156·6 | 151·1 | 71·4 | 136·7 | 186·8 | 164·9 | 145·0 | 162·0 | **151·3** | 18·1 |
| '43 | I | 159·1 | 155·7 | 72·8 | 139·7 | 188·0 | 163·9 | 148·4 | 163·8 | **153·5** | 18·1 |
| | II | 159·9 | 155·7 | 73·1 | 140·1 | 188·3 | 165·1 | 153·5 | 166·4 | **155·3** | 18·1 |
| | III | 156·1 | 155·7 | 74·1 | 138·7 | 188·2 | 163·4 | 156·0 | 166·9 | **155·0** | 18·1 |
| | IV | 150·1 | 155·7 | 74·2 | 136·2 | 187·8 | 160·8 | 157·4 | 166·6 | **153·8** | 18·1 |
| '44 | I | 151·6 | 155·7 | 73·7 | 136·7 | 191·4 | 161·1 | 159·6 | 168·6 | **155·2** | 18·1 |
| | II | 151·8 | 155·7 | 74·5 | 137·0 | 193·9 | 180·0 | 160·2 | 175·3 | **159·1** | 18·1 |
| | III | 152·2 | 155·7 | 75·8 | 137·4 | 199·3 | 183·7 | 161·4 | 178·5 | **161·2** | 18·1 |
| | IV | 151·4 | 155·7 | 73·7 | 136·7 | 203·9 | 184·6 | 155·4 | 177·5 | **160·2** | 18·1 |
| '45 | I | 154·8 | 155·7 | 73·7 | 138·0 | 204·8 | 186·0 | 157·3 | 178·9 | **161·7** | 19·6 |
| | II | 160·5 | 155·7 | 74·6 | 140·6 | 209·4 | 189·8 | 158·3 | 181·7 | **164·4** | 19·5 |
| | III | 157·7 | 155·7 | 73·8 | 139·2 | 212·5 | 189·7 | 156·2 | 181·6 | **163·7** | 20·2 |
| | IV | 154·7 | 155·7 | 74·4 | 138·2 | 212·1 | 190·0 | 154·3 | 180·8 | **162·9** | 31·1 |
| '46 | I | 155·7 | 155·7 | 78·6 | 139·4 | 225·5 | 191·5 | 155·9 | 185·5 | **166·1** | 31·1 |
| | II | 157·2 | 154·3 | 81·0 | 140·1 | 230·9 | 195·1 | 160·9 | 190·3 | **169·1** | 31·1 |
| | III | 156·0 | 154·3 | 84·5 | 140·3 | 248·5 | 211·6 | 168·9 | 203·4 | **176·9** | 38·2 |
| | IV | 153·0 | 154·7 | 86·6 | 139·7 | 260·9 | 272·3 | 205·9 | 240·9 | **198·3** | 41·6 |
| '47 | I | 156·0 | 154·7 | 91·4 | 141·9 | 282·9 | 286·7 | 223·4 | 258·9 | **209·5** | 36·7 |
| | II | 162·9 | 150·3 | 98·0 | 144·7 | 288·9 | 284·5 | 246·5 | 269·6 | **216·8** | 32·8 |
| | III | 187·1 | 146·7 | 102·2 | 154·3 | 295·4 | 298·0 | 253·6 | 278·5 | **222·5** | 30·4 |
| | IV | 200·8 | 144·0 | 103·0 | 159·3 | 322·7 | 330·0 | 267·8 | 300·9 | **241·1** | 33·4 |

* The averages of the four quarterly figures to each year do not necessarily coincide with the annual averages, as the latter are based as far as possible on average weekly prices. See also the *Journal*, 1893, p. 221; 1895, p. 144; 1901, p. 90; and 1909, p. 70.

† Silver, parity of 1 gold to 15½ silver = 100.

CC-0. In Public Domain. Gurukul Kangri Collection, Haridwar

Digitized by Arya Samaj Foundation Chennai and eGangotri



*Construction of the Tabular Statements*

The following table illustrates the method of construction of the index numbers. The index numbers here given are based on the average prices for the eleven years 1867–77. Take, for instance, the *Gazette* price of English wheat:

| | s. | d. | | | | |
|---|---|---|---|---|---|---|
| Average, 1867–77 | 54 | 6 | = 100, average point. | | | |
| ,, 1914 | 35 | 0 | = 64, or 36 per cent. | *below* | the average point. | |
| ,, 1930 | 80 | 7 | = 148, ,, 48 | ,, | *above* | ,, ,, |
| ,, 1936 | 53 | 3 | = 98, ,, 2 | ,, | *below* | ,, ,, |

The individual index numbers, therefore, represent simple percentages of the average point. The articles are grouped in six categories:

| | Index Nos. | 1867–77 Total Numbers | Example for 1947 | |
|---|---|---|---|---|
| | | | Total Numbers | Average |
| 1. Vegetable food, corn, etc. (wheat flour, barley, oats, maize, potatoes, and rice) | 8 | 800 | 1,529 | 191 |
| 2. Animal food (beef, mutton, pork, bacon, and butter) | 7 | 700 | 1,043 | 149 |
| 3. Sugar, coffee, and tea | 4 | 400 | 399 | 100 |
| 1–3. *Food* | 19 | 1,900 | 2,971 | 156 |
| 4. Minerals (iron, copper, tin, lead, and coal) | 7 | 700 | 2,126 | 304 |
| 5. Textiles (cotton, flax, hemp, jute, wool, and silk) | 8 | 800 | 2,359 | 295 |
| 6. Sundry materials (hides, leather, tallow, oils, soda, nitrate, indigo, and timber) | 11 | 1,100 | 2,897 | 263 |
| 4–6. *Materials* | 26 | 2,600 | 7,382 | 284 |
| *General Average* | 45 | 4,500 | 10,353 | 230 |

The general average is drawn from all forty-five descriptions which are treated as of equal value, and is the simple arithmetic mean as shown above.

CC-0. In Public Domain. Gurukul Kangri Collection, Haridwar

Digitized by Arya Samaj Foundation Chennai and eGangotri



## *Index of Silver Prices*

The base of the index numbers given below is 60·84*d.* per standard oz. = 100, this being a parity of 1 fine oz. of gold to 15½ standard ozs. of silver.*

| | | Price per oz. standard | Index number | | | Price per oz. standard | Index number |
|---|---|---|---|---|---|---|---|
| | | *d.* | | | | *d.* | |
| Average | 1873 .. .. | 59¼ | =97·4 | *Lowest* Nov., 1902 .. .. | | 21 1/16 | =35·6 |
| ,, | '90–99 .. .. | 34 | =55·8 | End Dec., 1906 .. .. | | 32 5/16 | =53·1 |
| ,, | 1917–26 .. .. | 40½ | =66·6 | ,, Dec., '08 .. .. | | 23 3/16 | =38·1 |
| ,, | 1893 .. .. | 35⅝ | =58·6 | ,, Dec., '12 .. .. | | 29 | =47·7 |
| ,, | '96 .. .. | 30¾ | =50·5 | ,, Dec., '13 .. .. | | 26 9/16 | =43·7 |
| ,, | 1914 .. .. | 25 5/16 | =41·6 | ,, Dec., '14 .. .. | | 22 1/16 | =37·3 |
| ,, | '15 .. .. | 23 11/16 | =38·9 | ,, Dec., '15 .. .. | | 26¼ | =43·1 |
| ,, | '16 .. .. | 31 5/16 | =50·4 | ,, Dec., '16 .. .. | | 36¼ | =58·7 |
| ,, | '17 .. .. | 40⅞ | =65·8 | ,, Dec., '17 .. .. | | 43½ | =70·0 |
| ,, | '18 .. .. | 47½ | =76·4 | ,, Dec., '18 .. .. | | 48 7/16 | =77·9 |
| ,, | '19 .. .. | 57 | =85·3 | ,, Dec., '19 .. .. | | 77½ | =98·3 |
| ,, | '20 .. .. | 61 9/16 | =76·1 | ,, Dec., '20 .. .. | | 40⅞ | =49·2 |
| ,, | '21 .. .. | 36⅜ | =48·1 | ,, Dec., '21 .. .. | | 34⅝ | =49·3 |
| ,, | '22 .. .. | 34 7/16 | =51·6 | ,, Dec., '22 .. .. | | 31 9/16 | =49·6 |
| ,, | '23 .. .. | 31 15/16 | =49·4 | ,, Dec., '23 .. .. | | 33 7/16 | =49·0 |
| ,, | '24 .. .. | 34 | =50·7 | ,, Dec., '24 .. .. | | 31 13/16 | =50·4 |
| ,, | '25 .. .. | 32⅛ | =52·5 | ,, Dec., '25 .. .. | | 31 11/16 | =52·1 |
| ,, | '26 .. .. | 28 11/16 | =47·1 | ,, Dec., '26 .. .. | | 25 | =41·1 |
| ,, | '27 .. .. | 26 1/32 | =42·8 | ,, Dec., '27 .. .. | | 26½ | =43·6 |
| ,, | '28 .. .. | 26¾ | =44·0 | ,, Dec., '28 .. .. | | 26⅜ | =43·3 |
| ,, | '29 .. .. | 24 7/16 | =40·2 | ,, Dec., '29 .. .. | | 21 7/16 | =35·2 |
| ,, | '30 .. .. | 17 11/16 | =29·0 | ,, Dec., '30 .. .. | | 14 7/16 | =23·7 |
| ,, | '31 .. .. | 14⅝ | =20·4 | ,, Dec., '31 .. .. | | 20 7/16 | =21·6 |
| ,, | '32 .. .. | 17⅜ | =19·5 | ,, Dec., '32 .. .. | | 16½ | =17·2 |
| ,, | '33 .. .. | 18⅛ | =18·7 | ,, Dec., '33 .. .. | | 19 1/16 | =19·5 |
| ,, | '34 .. .. | 21 7/32 | =20·0 | ,, Dec., '34 .. .. | | 24⅜ | =22·6 |
| ,, | '35 .. .. | 29 | =26·4 | ,, Dec., '35 .. .. | | 22½ | =20·6 |
| ,, | '36 .. .. | 20 1/16 | =18·5 | ,, Dec., '36 .. .. | | 21 5/16 | =19·4 |
| ,, | '37 .. .. | 20 1/16 | =18·4 | ,, Dec., '37 .. .. | | 19 1/16 | =17·7 |
| ,, | '38 .. .. | 19 17/32 | =17·6 | ,, Dec., '38 .. .. | | 20 1/16 | =17·3 |
| ,, | '39 .. .. | 20 13/32 | =17·1 | ,, Dec., '39 .. .. | | 22½ | =17·3 |
| ,, | '40 .. .. | 22 19/64 | =17·1 | ,, Dec., '40 .. .. | | 23 5/16 | =17·9 |
| ,, | '41 .. .. | 23 7/16 | =18·0 | ,, Dec., '41 .. .. | | 23½ | =18·1 |
| ,, | '42 .. .. | 23½ | =18·1 | ,, Dec., '42 .. .. | | 23½ | =18·1 |
| ,, | '43 .. .. | 23½ | =18·1 | ,, Dec., '43 .. .. | | 23½ | =18·1 |
| ,, | '44 .. .. | 23½ | =18·1 | ,, Dec., '44 .. .. | | 23½ | =18·1 |
| ,, | '45 .. .. | 30½ | =23·1 | ,, Dec., '45 .. .. | | 44 | =31·1 |
| ,, | '46 .. .. | 48⅝ | =36·7 | ,, Dec., '46 .. .. | | 55½ | =41·6 |
| ,, | '47 .. .. | 44 7/16 | =33·3 | ,, Dec., '47 .. .. | | 45 | =33·8 |

* All the index numbers in the table from 1916 to 1925 inclusive and from 1931 to date are calculated on the basis of the gold prices of silver instead of the sterling prices, though the latter are the price quotations given in the table. In arriving at the index numbers for these dates the prices of gold are taken as follows: For 1916, 1917 and 1918 the price is taken as 86*s.* 9½*d.* per fine oz., derived from the "pegged" New York rate of $4·76½ to the £. For 1919 the average price of gold is taken as 93*s.* 4¼*d.*, this being the parity price with the U.S. dollar, the average New York exchange in that year being $4·429. For the other dates the index numbers are based on the quotations in the London market for exportable gold. The quotation at the end of 1919 was 109*s.* 8¼*d.* per fine oz. The prices at the end of the years 1931–38 were 121*s.* 11*d.*, 123*s.* 9*d.*, 126*s.* 6*d.*, 141*s.* 0*d.*, 141*s.* 2*d.*, 141*s.* 7*d.*, 139*s.* 6*d.*, 149*s.* 7½*d.*, for the years 1939–44 168*s.* respectively, and 1945–47 172*s.* 3*d.*, and the average prices in these years were 92*s.* 6¼*d.*, 118*s.* 0¾*d.*, 124*s.* 10½*d.*, 137*s.* 7¾*d.*, 124*s.* 1¼*d.*, 140*s.* 3½*d.*, 140*s.* 8¼*d.*, 142*s.* 6½*d.*, 154*s.* 4*d.*, 168*s.*, 168*s.*, 168*s.*, 168*s.*, 170*s.* 4*d.* and 172*s.* 3*d.* respectively.

CC-0. In Public Domain. Gurukul Kangri Collection, Haridwar

Digitized by Arya Samaj Foundation Chennai and eGangotri



*World's Production of Silver* (*in millions of ounces*)

| | United States | Mexico | Canada | Australia | Other Countries | Total |
|---|---|---|---|---|---|---|
| 1905 .. .. .. | 56·1 | 65·0 | 5·9 | 15·0 | 30·3 | 164·2 |
| '06 .. .. .. | 56·5 | 55·2 | 8·5 | 14·2 | 30·6 | 172·3 |
| '07 .. .. .. | 56·5 | 61·0 | 12·8 | 19·0 | 34·8 | 165·0 |
| '08 .. .. .. | 52·4 | 73·6 | 22·1 | 17·2 | 37·8 | 184·2 |
| '09 .. .. .. | 54·7 | 73·9 | 27·5 | 16·3 | 39·7 | 203·1 |
| '10 .. .. .. | 57·1 | 71·4 | 32·9 | 21·5 | 38·8 | 212·1 |
| '11 .. .. .. | 60·4 | 79·0 | 32·7 | 16·6 | 37·5 | 221·7 |
| '12 .. .. .. | 63·8 | 74·6 | 31·6 | 18·1 | 36·2 | 226·2 |
| '13 .. .. .. | 66·8 | 70·7 | 31·5 | 3·5 | 51·4 | 224·3 |
| '14 .. .. .. | 72·4 | 27·5 | 28·4 | 3·6 | 36·5 | 223·9 |
| '15 .. .. .. | 74·9 | 39·5 | 28·4 | 4·1 | 37·3 | 168·4 |
| '16 .. .. .. | 74·4 | 38·2 | 25·4 | 4·2 | 26·6 | 184·2 |
| '17 .. .. .. | 71·7 | 35·0 | 22·2 | 10·0 | 35·3 | 168·8 |
| '18 .. .. .. | 67·8 | 62·5 | 21·2 | 10·0 | 35·9 | 174·2 |
| '19 .. .. .. | 56·7 | 62·7 | 15·7 | 7·4 | 32·0 | 197·4 |
| '20 .. .. .. | 55·5 | 66·8 | 12·6 | 7·5 | 33·0 | 174·5 |
| '21 .. .. .. | 53·1 | 64·5 | 13·1 | 4·9 | 35·7 | 175·4 |
| '22 .. .. .. | 56·2 | 81·1 | 18·6 | 11·3 | 46·3 | 171·3 |
| '23 .. .. .. | 73·3 | 90·9 | 17·8 | 13·3 | 50·7 | 213·5 |
| '24 .. .. .. | 65·3 | 91·5 | 19·7 | 10·8 | 52·2 | 246·0 |
| '25 .. .. .. | 66·1 | 92·9 | 20·2 | 11·1 | 54·8 | 239·5 |
| '26 .. .. .. | 62·7 | 98·3 | 22·4 | 11·2 | 59·0 | 245·1 |
| '27 .. .. .. | 60·4 | 104·6 | 22·7 | 9·0 | 57·3 | 253·6 |
| '28 .. .. .. | 58·4 | 108·5 | 21·9 | 9·0 | 59·5 | 254·0 |
| '29 .. .. .. | 61·2 | 108·7 | 23·1 | 9·0 | 59·7 | 257·3 |
| '30 .. .. .. | 51·0 | 105·0 | 26·0 | 8·9 | 57·1 | 261·7 |
| '31 .. .. .. | 31·0 | 86·0 | 21·0 | 7·6 | 50·4 | 248·0 |
| '32 .. .. .. | 24·0 | 69·0 | 18·0 | 6·5 | 47·5 | 196·0 |
| '33 .. .. .. | 22·8 | 68·1 | 15·2 | 11·0 | 52·0 | 165·0 |
| '34 .. .. .. | 32·5 | 74·1 | 16·4 | 10·8 | 56·6 | 169·1 |
| '35 .. .. .. | 45·6 | 75·6 | 16·6 | 11·4 | 71·5 | 190·4 |
| '36 .. .. .. | 63·4 | 77·5 | 18·3 | 12·7 | 81·8 | 220·7 |
| '37 .. .. .. | 71·3 | 84·7 | 22·7 | 14·3 | 80·9 | 253·7 |
| '38 .. .. .. | 61·7 | 81·0 | 23·8 | 101·3 | | 274·5 |
| '39 .. .. .. | 63·9 | 75·9 | 24·5 | 101·6 | | 267·8 |
| '40 .. .. .. | 68·3 | 82·6 | 25·3 | 96·3 | | 265·9 |
| '41 .. .. .. | 71·1 | 78·4 | 23·4 | 90·1 | | 272·5 |
| '42 .. .. .. | 55·9 | 84·9 | 21·8 | — | | 263·0 |
| '43 .. .. .. | 44·8 | 71·2 | 18·5 | — | | — |
| '44 .. .. .. | 37·3 | 63·0 | 14·7 | — | | — |
| '45 .. .. .. | 29·3 | 61·0 | 14·0 | — | | — |
| '46 .. .. .. | 21·7 | 48·3 | 14·0 | — | | — |
| '47* .. .. | 33·5 | 48·0 | 12·7 | — | | — |

* Provisional. (Estimate by Messrs. Samuel Montagu & Co.)

CC-0. In Public Domain. Gurukul Kangri Collection, Haridwar

Digitized by Arya Samaj Foundation Chennai and eGangotri



(000's omitted)

| Year | Value of output £ | Year | Value of output £ | Year | Value of output £ |
|---|---|---|---|---|---|
| 1851 | 17,200 | 1884 | 20,830 | 1917 | 87,236 |
| '52 | 26,550 | '85 | 21,250 | '18 | 78,605 |
| '53 | 31,090 | '86 | 21,430 | '19 | 73,078 |
| '54 | 25,490 | '87 | 21,735 | '20 | 68,522 |
| '55 | 27,015 | '88 | 22,644 | '21 | 67,848 |
| '56 | 29,520 | '89 | 25,375 | '22 | 66,723 |
| '57 | 26,655 | '90 | 24,421 | '23 | 77,888 |
| '58 | 24,930 | '91 | 26,846 | '24 | 81,807 |
| '59 | 24,970 | '92 | 30,134 | '25 | 82,267 |
| '60 | 23,850 | '93 | 32,363 | '26 | 82,211 |
| '61 | 22,760 | '94 | 37,229 | '27 | 82,582 |
| '62 | 21,550 | '95 | 40,843 | '28 | 82,400 |
| '63 | 21,390 | '96 | 41,559 | '29 | 84,500 |
| '64 | 22,600 | '97 | 48,509 | '30 | 88,500 |
| '65 | 24,040 | '98 | 58,949 | '31 | 95,100 |
| '66 | 24,220 | '99 | 63,027 | '32 | 103,400 |
| '67 | 22,805 | 1900 | 52,312 | '33 | 107,700 |
| '68 | 21,945 | '01 | 53,630 | '34 | 116,000 |
| '69 | 21,245 | '02 | 60,975 | '35 | 125,700 |
| '70 | 21,370 | '03 | 67,337 | '36 | 140,900 |
| '71 | 25,400 | '04 | 71,380 | '37 | 148,700 |
| '72 | 24,200 | '05 | 78,143 | '38 | 159,000 |
| '73 | 23,600 | '06 | 82,707 | '39 | 165,900 |
| '74 | 22,950 | '07 | 84,857 | '40 | 174,000* |
| '75 | 22,700 | '08 | 90,995 | '41 | 167,200* |
| '76 | 22,540 | '09 | 93,302 | '42 | 146,300* |
| '77 | 23,830 | '10 | 93,544 | '43 | 112,600* |
| '78 | 22,020 | '11 | 94,930 | '44 | 100,900* |
| '79 | 21,400 | '12 | 95,783 | '45 | 97,900* |
| '80 | 22,130 | '13 | 97,481 | '46 | 99,900* |
| '81 | 21,150 | '14 | 92,709 | '47 | 100,500* |
| '82 | 20,500 | '15 | 97,114 | | |
| '83 | 20,640 | '16 | 92,597 | | |

*Gold.*—The table shows the world's annual gold production since 1851. Prior to 1911 the estimates are those of the Bureau of the U.S. Mint and other authorities. The estimates since 1926 are those of the Union Corporation, Limited. The value is taken throughout at £4·25 per fine oz.

* Estimated or provisional figure.

CC-0. In Public Domain. Gurukul Kangri Collection, Haridwar

Digitized by Arya Samaj Foundation Chennai and eGangotri



## *Average Prices of Commodities**

| No. of Article | 0 | 1 | 2 | 3 | 4 | 5 | 6 | 7 | 8 | 1–8 | 9 | 10 |
|---|---|---|---|---|---|---|---|---|---|---|---|---|
| | | Wheat | | Flour | Barley | Oats | Maize § | Potatoes* | Rice | Vegetable Food | Beef ‡ | |
| Year | Silver † | English *Gazette* | American | Town Made white (now "G.R.") | English *Gazette* | English *Gazette* | American Mixed | Good English | Rangoon Cargoes to Arrive | Total | Prime | Middling |
| | *d.* per oz. | *s.* and *d.* per qr. | *s.* and *d.* per qr. | *s.* per sack (280 lbs.) | *s.* and *d.* per qr. | *s.* and *d.* per qr. | *s.* per qr. | *s.* per ton | *s.* and *d.* per cwt. | | *d.* per 8 lbs. | *d.* per 8 lbs. |
| 1922 .. | 34 7/16 | 47·10 | 52·11 | 45 3/4 | 40·1 | 29·1 | 31 1/4 | 130 | 14·10 | — | 88 5/8 | 82 |
| '26 .. | 28 11/16 | 53·3 | 58·9 | 49 1/4 | 36·11 | 25·1 | 29 13/16 | 127 | 16·3 | — | 74 | 67 |
| '27 .. | 26 1/32 | 49·3 | 58·3 | 44 9/16 | 42·0 | 25·4 | 30 9/16 | 136 | 15·11 | — | 70 | 62 |
| '28 .. | 26 3/4 | 44·8 | 50·10 | 40 1/16 | 39·0 | 29·0 | 38 3/32 | 133 | 15·0 | — | 74 | 66 1/2 |
| '29 .. | 24 7/16 | 42·2 | 51·3 | 38 1/2 | 35·5 | 24·7 | 36 1/4 | 111 | 14·3 | — | 72 | 66 |
| '30 .. | 17 11/16 | 34·3 | 36·10 | 33 1/32 | 28·3 | 17·2 | 23 | 93 | 13·0 | — | 73 | 68 |
| '31 .. | 14 3/5 | 24·0 | 25·1 | 22 7/8 | 28·0 | 17·8 | 15 9/16 | 146 | 9·8 | — | 67 | 61 |
| '32 .. | 17 25/32 | 25·0 | 27·5 | 24 7/32 | 27·1 | 19·3 | 18 1/32 | 152 | 9·8 | — | 65 | 59 |
| '33 .. | 18 1/8 | 22·10 | 25·7 | 23 29/32 | 28·7 | 15·10 | 17 1/16 | 86 | 7·9 | — | 61 | 52 |
| '34 .. | 21 7/32 | 20·2 | 28·0 | 23 1/8 | 30·11 | 17·5 | 19 19/32 | 97 | 7·8 | — | 58 | 52 |
| '35 .. | 29 | 22·2 | 31·1 | 25 3/4 | 28·7 | 18·9 | 17 1/4 | 107 | 8·10 | — | 54 | 49 |
| '36 .. | 20 1/16 | 30·9 | 35·1 | 31 17/32 | 29·5 | 17·8 | 19 1/2 | 146 | 9·0 | — | 54 | 50 |
| '37 .. | 20 1/16 | 40·0 | 49·7 | 40 1/3 | 39·0 | 23·11 | 26 9/16 | 136 | 10·5 | — | 61 | 57 |
| '38 .. | 19 17/32 | 28·11 | 39·3 | 30 21/32 | 36·4 | 21·2 | 28 1/16 | 111 | 10·7 | — | 62 | 58 |
| '39 .. | 20 13/32 | 21·5 | 30·1 | 22 9/32 | 31·7 | 19·3 | 26 1/2 | 117 | 11·1 | — | 61 | 58 |
| '40 .. | 22 19/64 | 42·10 | 33·6 | 24 5/16 | 64·10 | 37·2 | 39 13/16 | 143 | 15·5 | — | 72 | 68 |
| '41 .. | 23 7/16 | 62·10 | 32·2 | 27 1/2 | 85·8 | 40·10 | 43 ‖ | 164 | 23·8 | — | 72 | 68 |
| '42 .. | 23 1/2 | 68·6 | 36·9 | 35 | 165·5 | 42·0 | 43 ‖ | 134 | 26·0 | — | 76 | 68 |
| '43 .. | 23 1/2 | 69·8 | 45·5 | 38 1/4 | 112·5 | 43·8 | 43 ‖ | 111 | 27·2 | — | 79 | 71 |
| '44 .. | 23 1/2 | 63·11 | 56·0 | 38 3/4 | 94·6 | 45·3 | 43 ‖ | 115 | 27·2 | — | 79 | 71 |
| '45 .. | 30 1/2 | 61·10 | 63·7 | 40 | 89·2 | 45·9 | 43 ‖ | 139 | 27·2 | — | 79 | 71 |
| '46 .. | 48 5/8 | 63·7 | 65·11 | 40 | 86·6 | 45·3 | 43 ‖ | 137 | 27·2 | — | 79 3/4 | 72 |
| '47 .. | 44 7/16 | 71·9 | 68·10 | 40 | 88·7 | 50·9 | 43 ‖ | 162 | 49·6 | — | 80 | 72 |
| Average | | | | | | | | | | | | |
| 1904–13 | 26 3/4 | 31 1/2 | 36 | 30 | 25 1/2 | 18 1/2 | 24 1/2 | 78 | 7 3/4 | — | 51 | 44 1/2 |
| 1890–99 | 34 | 28 1/2 | 31 1/2 | 27 1/2 | 25 1/2 | 17 1/2 | 19 1/2 | 72 | 6 1/4 | — | 47 | 37 1/2 |
| '78–87 | 50 | 40 | 43 1/2 | 34 1/2 | 31 1/2 | 21 | 25 | 102 | 8 | — | 55 1/2 | 46 |
| '67–77 | 58 1/2 | 54 1/2 | 56 | 46 | 39 | 26 | 32 1/2 | 117 | 10 | — | 59 | 50 |
| | Index Numbers (or Percentages) of Prices, the Average of 1867–77 being 100 | | | | | | | | | | | |
| 1922 .. | 51·6 | 88 | 95 | 100 | 103 | 112 | 96 | 111 | 148 | 853 | 150 | 164 |
| '26 .. | 47·1 | 98 | 105 | 107 | 95 | 96 | 92 | 109 | 163 | 865 | 125 | 134 |
| '27 .. | 42·8 | 90 | 104 | 98 | 108 | 97 | 95 | 116 | 159 | 867 | 119 | 124 |
| '28 .. | 44·0 | 82 | 91 | 87 | 100 | 112 | 118 | 114 | 150 | 854 | 125 | 133 |
| '29 .. | 40·2 | 77 | 91 | 84 | 91 | 95 | 112 | 95 | 143 | 788 | 120 | 132 |
| '30 .. | 29·0 | 63 | 66 | 72 | 72 | 66 | 71 | 79 | 130 | 619 | 124 | 136 |
| '31 .. | 20·4 | 44 | 45 | 50 | 71 | 68 | 48 | 125 | 93 | 544 | 114 | 122 |
| '32 .. | 19·5 | 46 | 49 | 53 | 69 | 74 | 58 | 130 | 93 | 572 | 110 | 118 |
| '33 .. | 18·7 | 42 | 46 | 52 | 73 | 61 | 53 | 74 | 78 | 479 | 103 | 104 |
| '34 .. | 20·0 | 37 | 50 | 50 | 79 | 67 | 60 | 83 | 77 | 503 | 98 | 104 |
| '35 .. | 26·4 | 41 | 56 | 56 | 73 | 72 | 53 | 91 | 88 | 530 | 92 | 98 |
| '36 .. | 18·5 | 56 | 63 | 69 | 75 | 68 | 60 | 125 | 90 | 606 | 92 | 100 |
| '37 .. | 18·4 | 73 | 89 | 88 | 100 | 92 | 82 | 116 | 105 | 745 | 103 | 114 |
| '38 .. | 17·6 | 53 | 70 | 67 | 93 | 81 | 86 | 95 | 106 | 651 | 105 | 116 |
| '39 .. | 17·1 | 39 | 54 | 48 | 81 | 74 | 82 | 100 | 111 | 589 | 103 | 116 |
| '40 .. | 17·1 | 78 | 60 | 53 | 166 | 143 | 122 | 122 | 154 | 898 | 122 | 136 |
| '41 .. | 18·0 | 115 | 57 | 60 | 220 | 157 | 132 | 140 | 236 | 1,117 | 122 | 136 |
| '42 .. | 18·1 | 126 | 66 | 76 | 424 | 162 | 132 | 115 | 260 | 1,361 | 129 | 136 |
| '43 .. | 18·1 | 128 | 81 | 83 | 288 | 168 | 132 | 95 | 272 | 1,247 | 134 | 142 |
| '44 .. | 18·1 | 117 | 100 | 84 | 242 | 174 | 132 | 98 | 272 | 1,219 | 134 | 142 |
| '45 .. | 23·1 | 113 | 114 | 87 | 229 | 176 | 132 | 118 | 272 | 1,241 | 134 | 142 |
| '46 .. | 36·7 | 117 | 118 | 87 | 222 | 174 | 132 | 117 | 272 | 1,239 | 135 | 144 |
| '47 .. | 33·3 | 132 | 123 | 87 | 227 | 195 | 132 | 138 | 495 | 1,529 | 135 | 144 |

* The annual prices are the average monthly or weekly quotations, except potatoes, which are the average weekly quotations during the eight months January to April and September to December.

† Not included in the general average. ‡ Meat (9–13), by the carcase, in the London Central Meat Market.

§ La Plata from 1924. ‖ Annual average of Liverpool (Feeding Stuffs) £10 per ton fixed by Ministry of Food.

CC-0. In Public Domain. Central Archaeological Library, New Delhi

Digitized by Arya Samaj Foundation Chennai and eGangotri

## *Average Prices of Commodities—Contd.*

| No. of Article | 11 | 12 | 13 | 14 | 15 | 9–15 | 16A | 16B | 17 | 18A * | 18B * | 18 |
|---|---|---|---|---|---|---|---|---|---|---|---|---|
| | Mutton | | Pork | Bacon | Butter | | Sugar | | | Coffee | | |
| Year | Prime | Middling | Large and Small, average | Waterford | Friesland, Fine to Finest | Animal Food Total | British West Indian Refining‖ | Beet, German, 88 p. c., f.o.b. | Java, Floating Cargoes § | Ceylon * Plantation. Low Middling† | Rio, Good | Mean of 18A and 18B |
| | *d.* per 8 lbs. | *d.* per 8 lbs. | *d.* per 8 lbs. | *s.* per cwt. | *s.* per cwt. | | *s.* per cwt. | *s.* per cwt. | *s.* per cwt. | *s.* per cwt. | *s.* per cwt. | |
| 1922 .. | 125 | 121⅔ | 101 | 145⅓ | 202½ | — | 15 | 14⅛ | 15 5/16 | 120⅔ | 74⅓ | — |
| '26 .. | 89 | 80½ | 98⅝ | 130 | 173 | — | 16 7/12 | 11⅔ | 12⅝ | 154⅔ | 89 1/16 | — |
| '27 .. | 86 | 79⅔ | 85 | 102¼ | 178 | — | 16 7/16 | 12½ | 13 9/16 | 143½ | 71½ | — |
| '28 .. | 92¾ | 87 | 77 | 101¾ | 185⅞ | — | 13½ | 10 11/16 | 11½ | 143 9/32 | 81 11/32 | — |
| '29 .. | 88 | 83 | 91 | 116 13/32 | 180⅛ | — | 11 7/32 | 8 5/16 | 8⅞ | 141⅛ | 74 27/32 | — |
| '30 .. | 92 | 86 | 89 | 105⅝ | 146 13/16 | — | 8⅝ | 5 27/32 | 6 13/32 | 106 23/32 | 42 11/32 | — |
| '31 .. | 79 | 73 | 65 | 83⅜ | 130 | — | 7 13/16 | 5 11/16 | 6 7/16 | 101¼ | 33 1/16 | — |
| '32 .. | 63 | 55 | 54 | 77 | 126⅜ | — | 7½ | 5 5/16 | 5 19/32 | 105 5/32 | 54 5/16 | — |
| '33 .. | 69 | 63 | 60 | 81½ | 105 9/16 | — | 7 5/32 | 4 23/32 | 5¼ | 86 25/32 | 42⅛ | — |
| '34 .. | 74 | 70 | 65 | 90 9/32 | 79⅝ | — | 6 9/32 | 4 5/32 | 4 1/16 | 87 7/32 | 42 13/16 | — |
| '35 .. | 75 | 70 | 62 | 89 | 92⅝ | — | 6 3/16 | 3 21/32 | 4¾ | 67 9/16 | 29 11/32 | — |
| '36 .. | 73 | 68 | 65 | 93 27/32 | 98 21/32 | — | 6 13/32 | 3 1/32 | 4¼ | 58½ | 30 21/32 | — |
| '37 .. | 78 | 74 | 68 | 94 | 108 3/32 | — | 7 31/32 | 5¼ | 6½ | 75¾ | 36¼ | — |
| '38 .. | 62 | 56 | 69 | 97 3/16 | 114 1/16 | — | 7 1/32 | 4 5/16 | 5 15/32 | 75 | 19¾ | — |
| '39 .. | 68 | 64 | 70 | 97¾ | 122 | — | 9 3/32 | 6 1/32 | 7 7/32 | 73¾ | 22½ | — |
| '40 .. | 85 | 76 | 96 | 114⅞ | 143 | — | 9¾ | — | 8⅛ | 86 5/16 | 28 3/32 | — |
| '41 .. | 85 | 76 | 96 | 123 11/16 | 142 11/16 | — | 9¾ | — | 8⅛ | 137½ | 30¼ | — |
| '42 .. | 90 | 78 | 101 | 130 | 143½ | — | 9¾ ‡ | — | 8⅛ ‡ | 130 ‡ | 28¾ ‡ | — |
| '43 .. | 96 | 84 | 102 | 142 | 151⅓ | — | 9¾ ‡ | — | 8⅛ ‡ | 140 ‡ | 37 ‡ | — |
| '44 .. | 96 | 84 | 102 | 142 | 151⅓ | — | 9¾ ‡ | — | 8⅛ ‡ | 140 ‡ | 37 ‡ | — |
| '45 .. | 96 | 84 | 102 | 142 | 151⅓ | — | 9¾ ‡ | — | 8⅛ ‡ | 140 ‡ | 59 ‡ | — |
| '46 .. | 100¾ | 81½ | 97 | 142 | 139¾ | — | — | — | 23¼ | 150 ‡ | 77¾ | — |
| '47 .. | 101 | 81 | 98 | 124¼ | 126 | — | — | — | 27½ | 150 ‡ | 73⅜ | — |
| Average 1904–13 | 58¼ | 51¾ | 47⅝ | 67 | 113 | — | 10⅛ | 10⅞ | 12 | 75½ | 43¾ | — |
| 1890–99 | 54½ | 41½ | 42¾ | 59 | 100 | — | 11½ | 11½ | 13¾ | 98 | 62 | — |
| '78–87 | 64½ | 53 | 49 | 71 | 116 | — | 17 | 18 | 21½ | 78 | 52 | — |
| '67–77 | 63 | 55 | 52 | 74 | 125 | — | 23 | 24 | 28½ | 87 | 64 | — |
| Index Numbers (or Percentages) of Prices, the Average of 1867–77 being 100 | | | | | | | | | | | | |
| 1922 .. | 199 | 221 | 194 | 196 | 162 | 1,286 | 62 | | 54 | 140 * | 116 * | 128 |
| '26 .. | 141 | 146 | 190 | 176 | 138 | 1,050 | 60 | | 44 | 178 | 139 | 159 |
| '27 .. | 136 | 145 | 163 | 138 | 142 | 967 | 62 | | 47 | 165 | 112 | 139 |
| '28 .. | 146 | 158 | 148 | 137 | 149 | 996 | 51 | | 40 | 165 | 127 | 146 |
| '29 .. | 142 | 151 | 175 | 157 | 144 | 1,021 | 42 | | 31 | 162 | 117 | 140 |
| '30 .. | 146 | 155 | 171 | 143 | 117 | 992 | 31 | | 22 | 123 | 66 | 95 |
| '31 .. | 125 | 133 | 125 | 113 | 104 | 836 | 29 | | 23 | 120 | 53 | 87 |
| '32 .. | 100 | 100 | 104 | 104 | 101 | 737 | 27 | | 20 | 121 | 85 | 103 |
| '33 .. | 110 | 114 | 115 | 110 | 84 | 740 | 25 | | 18 | 100 | 66 | 83 |
| '34 .. | 117 | 127 | 125 | 122 | 64 | 757 | 22 | | 16 | 100 | 67 | 84 |
| '35 .. | 119 | 127 | 119 | 120 | 74 | 749 | 21 | | 17 | 78 | 46 | 62 |
| '36 .. | 116 | 124 | 131 | 127 | 79 | 763 | 21 | | 17 | 67 | 48 | 58 |
| '37 .. | 124 | 135 | 125 | 127 | 86 | 820 | 28 | | 23 | 87 | 57 | 72 |
| '38 .. | 98 | 102 | 133 | 131 | 92 | 777 | 24 | | 19 | 86 | 31 | 59 |
| '39 .. | 108 | 116 | 135 | 132 | 98 | 808 | 32 | | 26 | 85 | 35 | 60 |
| '40 .. | 135 | 138 | 185 | 155 | 114 | 985 | 42 | | 29 | 99 | 44 | 72 |
| '41 .. | 135 | 138 | 185 | 167 | 114 | 997 | 42 | | 29 | 158 | 47 | 102 |
| '42 .. | 143 | 142 | 194 | 176 | 115 | 1,035 | 42 | | 29 | 150 | 45 | 98 |
| '43 .. | 152 | 153 | 196 | 192 | 121 | 1,090 | 42 | | 29 | 161 | 58 | 109 |
| '44 .. | 152 | 153 | 196 | 192 | 121 | 1,090 | 42 | | 29 | 161 | 58 | 109 |
| '45 .. | 152 | 153 | 196 | 192 | 121 | 1,090 | 42 | | 29 | 161 | 93 | 127 |
| '46 .. | 160 | 148 | 187 | 192 | 112 | 1,078 | — | | 82 | 172 | 121 | 146 |
| '47 .. | 160 | 147 | 188 | 168 | 101 | 1,043 | — | | 96 | 172 | 115 | 143 |

* Index numbers not included in general average. ‡ Nominal.
† E. India good middling from 1908. § Raw Centrifugals, 96% Pol., from 1924.
‖ White Javas, C.I.F., from 1924.


CC-0. In Public Domain. Gurukul Kangri Collection, Haridwar

Digitized by Arya Samaj Foundation Chennai and eGangotri

*Average Prices of Commodities—Contd.*

| No. of Article | 19A * | 19B * | 19 | 16–19 | 1–19 | 20A | 20B | 21 | 22 | 23 | 24 | 25 |
|---|---|---|---|---|---|---|---|---|---|---|---|---|
| | Tea | | | Sugar, Coffee, and Tea | Food | Iron | | | Copper | Tin | Lead | Coal |
| Year | Congou, Common *d.* per lb. | Average Import Price *d.* per lb. | Mean of 19A and 19B | Total | Total | Scottish Pig *s.* and *d.* per ton | Cleveland (Middlesbrough) Pig *s.* and *d.* per ton | Bars, Common per ton | Standard £ per ton | Straits £ per ton | English Pig £ per ton | Wallsend Hetton in London§ *s.* per ton |
| 1922 .. | 8 5/8 | 14·9 | — | — | — | 99·10 | 90·7 | 11 1/5 | 63 1/3 | 162 | 25 2/8 | 34 8/8 |
| '26 .. | 7 13/16 | 18·82 | — | — | — | 87·2 | 87·6 | 11 1/2 | 58 1/32 | 297 5/16 | 32 1/8 | †30 7/16 |
| '27 .. | 6 3/4 | 18·58 | — | — | — | 80·5 | 73·0 | 11 1/4 | 55 3/4 | 303 3/8 | 25 9/16 | 23 1/16 |
| '28 .. | 6 5/16 | 16·84 | — | — | — | 69·9 | 65·9 | 9 15/16 | 63 3/4 | 229 7/16 | 22 5/8 | 21 7/16 |
| '29 .. | 6 1/16 | 16·11 | — | — | — | 74·0 | 70·3 | 9 3/4 | 75 9/16 | 207 7/16 | 24 1/32 | 23 3/8 |
| '30 .. | 5 7/32 | 15·12 | — | — | — | 76·0 | 67·0 | 9 11/32 | 54 3/4 | 144 29/32 | 19 1/2 | 24 25/32 |
| '31 .. | 4 13/32 | 13·29 | — | — | — | 71·0 | 58·6 | 10 3/32 | 38 1/8 | 121 1/8 | 14 9/32 | 24 1/8 |
| '32 .. | 4 9/32 | 10·75 | — | — | — | 68·2 | 58·6 | 10 | 31 21/32 | 140 | 13 5/8 | 23 13/32 |
| '33 .. | 6 21/32 | 11·87 | — | — | — | 66 | 62·3 | 9 11/16 | 32 21/32 | 202 1/2 | 13 1/4 | 22 3/8 |
| '34 .. | 8 21/32 | 13·20 | — | — | — | 69·6 | 66·11 | 9 17/32 | 30 3/32 | 232 1/4 | 12 13/32 | 20 1/4 |
| '35 .. | 6 23/32 | 13·06 | — | — | — | 70·6 | 67·10 | 9 5/8 | 32 15/32 | 230 15/32 | 16 | 20 9/16 |
| '36 .. | 6 1/4 | 13·19 | — | — | — | 78·6 | 73·2 | 10 3/16 | 37 13/32 | 207 21/32 | 19 13/32 | 23 3/32 |
| '37 .. | 6 9/16 | 14·58 | — | — | — | 104·6 | 94·4 | 12 5/16 | 54 21/32 | 246 3/4 | 24 29/32 | 24 1/4 |
| '38 .. | 6 15/32 | 14·04 | — | — | — | 118·0 | 109 | 13 1/4 | 41 21/32 | 193 21/32 | 17 1/16 | 25 1/16 |
| '39 .. | 6 1/4 ‖ | 14·18 | — | — | — | 104·3 | 100·7 | 12 3/8 | 44 1/4 | 232 17/32 | 17 3/8 | 25 11/16 |
| '40 .. | — | 15·33 | — | — | — | 114·10 | 116·4 | 14 5/16 | 62 | 273 5/16 | 26 1/2 | 28 1/16 |
| '41 .. | — | 15·13 | — | — | — | 123 | 128 | 15 5/8 | 62 | 284 5/16 | 26 1/2 | 30 7/16 |
| '42 .. | — | 16·25 | — | — | — | 123 | 128 | 15 5/8 | 62 | 275 | 26 1/2 | 32 1/4 |
| '43 .. | — | 18·44 | — | — | — | 123 | 128 | 15 5/8 | 62 | 275 | 26 1/2 | 34 15/16 |
| '44 .. | — | 19·48 | — | — | — | 123 | 128 | 16 1/2 | 62 | 300 | 26 1/2 | 38 5/8 |
| '45 .. | — | 20·06 | — | — | — | 139 15/16 | 140 1/2 | 18 | 62 | 300 | 29 1/2 | 42 3/4 |
| '46 .. | — | 21·31 | — | — | — | 167 | 165 1/2 | 19 5/8 | 77 1/2 | 321 5/8 | 47 3/4 | 45 1/2 |
| '47 .. | — | 27·65 | — | — | — | 176 3/4 | 175 7/16 | 20 7/16 | 130 7/8 | 426 3/4 | 86 7/8 | 48 1/8 |
| Average 1904–13 | 7 7/8 | 8 1/2 | — | — | — | 57 3/4 | 51 1/2 | 6 7/8 | 67 3/4 | 164 7/8 | 15 5/8 | 18 1/8 |
| 1890–99 | 4 5/8 | 9 3/4 | — | — | — | 47 | 41 1/2 | 5 1/2 | 50 | 81 | 12 | 17 1/2 |
| '78–87 | 6 3/4 | 12 3/4 | — | — | — | 46 | 38 | 5 1/2 | 55 | 89 | 14 | 16 1/2 |
| '67–77 | 11 1/4 | 17 1/4 | — | — | — | 69 | 60 | 8 1/4 | 75 | 105 | 20 1/2 | 22 |

Index Numbers (or Percentages) of Prices, the Average of 1867–77 being 100

| | | | | | | | | | | | |
|---|---|---|---|---|---|---|---|---|---|---|---|
| 1922 .. | * 77 | * 86 | 82 | 326 | 2,465 | 148 | 136 | 84 | 154 | 123 | 156 |
| '26 .. | 69 | 109 | 89 | 352 | 2,267 | 135 | 139 | 77 | 283 | 157 | 138 |
| '27 .. | 60 | 108 | 84 | 332 | 2,166 | 119 | 136 | 74 | 289 | 125 | 105 |
| '28 .. | 56 | 98 | 77 | 314 | 2,164 | 105 | 120 | 85 | 219 | 109 | 97 |
| '29 .. | 54 | 93 | 74 | 287 | 2,096 | 112 | 118 | 101 | 198 | 117 | 106 |
| '30 .. | 46 | 88 | 67 | 215 | 1,826 | 111 | 121 | 73 | 138 | 95 | 113 |
| '31 .. | 42 | 78 | 60 | 199 | 1,579 | 100 | 123 | 52 | 115 | 71 | 112 |
| '32 .. | 38 | 62 | 50 | 200 | 1,509 | 98 | 121 | 43 | 131 | 65 | 106 |
| '33 .. | 58 | 68 | 63 | 189 | 1,408 | 99 | 117 | 44 | 193 | 65 | 103 |
| '34 .. | 77 | 77 | 77 | 199 | 1,459 | 106 | 116 | 40 | 221 | 61 | 92 |
| '35 .. | 60 | 76 | 68 | 168 | 1,447 | 107 | 117 | 43 | 219 | 78 | 92 |
| '36 .. | 56 | 76 | 66 | 162 | 1,531 | 118 | 123 | 50 | 198 | 95 | 105 |
| '37 .. | 58 | 85 | 72 | 195 | 1,760 | 154 | 149 | 73 | 235 | 121 | 111 |
| '38 .. | 58 | 81 | 70 | 172 | 1,600 | 176 | 161 | 56 | 185 | 83 | 117 |
| '39 .. | 56 | 82 | 69 | 187 | 1,584 | 159 | 150 | 59 | 221 | 85 | 115 |
| '40 .. | — | 89 | 89 | 232 | 2,115 | 179 | 173 | 83 | 260 | 129 | 127 |
| '41 .. | — | 88 | 88 | 261 | 2,375 | 195 | 189 | 83 | 271 | 129 | 141 |
| '42 .. | — | 94 | 94 | 263 | 2,659 | 195 | 189 | 83 | 262 | 129 | 148 |
| '43 .. | — | 107 | 107 | 287 | 2,624 | 195 | 189 | 83 | 262 | 129 | 159 |
| '44 .. | — | 113 | 113 | 293 | 2,602 | 195 | 200 | 83 | 286 | 129 | 176 |
| '45 .. | — | 116 | 116 | 314 | 2,645 | 217 | 218 | 83 | 286 | 142 | 194 |
| '46 .. | — | 124 | 124 | 352 | 2,669 | 258 | 238 | 103 | 305 | 233 | 205 |
| '47 .. | — | 160 | 160 | 399 | 2,971 | 273 | 248 | 175 | 406 | 424 | 219 |

* Index numbers not included in the general average.
§ Best Yorkshire house after 1916.
† Average price January–April, 1926.
‖ First 9 months only.

CC-0. In Public Domain. Gurukul Kangri Collection, Haridwar

Digitized by Arya Samaj Foundation Chennai and eGangotri

## Average Prices of Commodities—Contd.

| No. of Article | 26 | 20–26 | 27 | 28 | 29A | 29B | 30A | 30B | 31 | 32A | 32B | 33 |
|---|---|---|---|---|---|---|---|---|---|---|---|---|
| | Coal | Minerals | Cotton | | Flax | | Hemp | | Jute | Wool | | |
| Year | Average Export Price | Total | Middling American | Fair Dhollerah ‖ | Petrograd ¶ | Russian Average Import Price | Manila Fair Roping | Petrograd Clean (*a*) | Good Medium†† | Merino, Port Phillip, Average Fleece | Merino, Adelaide, Average Greasy | English Lincoln Half Hogs |
| | *s.* per ton | | *d.* per lb. | *d.* per lb. | £ per ton | £ per ton | £ per ton | £ per ton | £ per ton | *d.** per lb. | *d.* per lb. | *d.* per lb. |
| 1922 .. | 24·16 | — | 12·10 | 8 | 95 | 84 7/8 | 33 1/8 | 57 ‡ | 30 1/4 | 39 | 17 1/8 | 9 3/4 |
| '26 .. | 18·59 | — | 9·40 | 7·75 | 65 | 72 15/16 | 43 | 74 5/8 | 43 7/8 | 36 1/2 | 16 7/16 | 15 |
| '27 .. | 17·80 | — | 9·54 | 8·27 | 95 13/16 | 74 1/2 | 43 3/8 | 66 5/16 | 32 3/4 | 38 1/16 | 17 7/16 | 15 13/32 |
| '28 .. | 15·67 | — | 10·92 | 8·66 | 98 1/2 | 91 1/16 | 37 1/16 | 63 13/32 | 33 13/16 | 37 | 17 7/16 | 17 29/32 |
| '29 .. | 16·15 | — | 10·26 | 7·73 | 76 7/16 | 71 7/32 | 37 9/32 | 61 | 32 | 35 3/8 | 13 3/32 | 16 1/16 |
| '30 .. | 16·64 | — | 7·49 | 5·12 | 53 1/8 | 60 7/32 | 26 1/2 | 48 7/32 | 20 | 18 9/32 | 8 13/32 | 10 3/4 |
| '31 .. | 15·98 | — | 5·90 | 4·60 | 36 | 35 9/16 | 18 3/4 | 27 1/2 | 15 15/16 | 14·7 | 7·1 | 8 1/2 |
| '32 .. | 16·27 | — | 5·24 | 4·85 | 45 7/32 | 42 5/32 | 18 23/32 | 36 | 16 3/32 | 15·0 | 7·2 | 5 23/32 |
| '33 .. | 16·08 | — | 5·54 | 4·53 | 51 13/32 | 48 1/2 | 15 7/8 | 37 | 14 3/8 | 19·9 | 9·3 | 5 29/32 |
| '34 .. | 16·08 | — | 6·70 | 4·80 | 60 1/16 | 50 29/32 | 14 29/32 | 42 5/16 | 14 3/32 | 21 1/4 | 10·4 | 7 |
| '35 .. | 16·30 | — | 6·71 | 5·42 | 79 3/8 | 72 5/16 | 19 31/32 | 43 1/4 | 16 15/16 | 20·1 | 9·5 | 7 1/32 |
| '36 .. | 16·98 | — | 6·71 | 5·12 | 63 25/32 | 60 15/16 | 28 11/32 | 42 27/32 | 17 19/32 | 24·7 | 12·2 | 10 5/16 |
| '37 .. | 19·05 | — | 6·21 | 4·80 | 78 13/32 | 70 3/32 | 34 5/16 | 38 3/8 | 19 1/16 | 26·9 | 12·7 | 16·9 |
| '38 .. | 21·32 | — | 4·93 | 3·67 | 66 29/32 | 63 1/2 | 21 25/32 | 38 5/16 | 17 21/32 | 18·6 | 8·9 | 11·9 |
| '39 .. | 21·12 | — | 5·95 | 4·41 | 90 21/32 | 72 9/16 | 22 5/16 | 48 5/16 | 26 13/32 | 17·9 | 9·0 | 12·2 |
| '40 .. | 27·23 | — | 8·10 | 6·26 | 177 11/32 | 183 1/32 | 26 3/8 | 100 13/32 | 27 3/4 | 29·6 | 14·9 | 19·4 |
| '41 .. | 32·22 | — | 9·14 | 7·65 | 200 ‡ | — | 31 13/16 | 126 ‡ | 26 13/32 | 32 | 16 1/8 | 21 |
| '42 .. | 34·87 | — | 8·83 | 7·37 | 200 ‡ | 201·6 | 33 ‡ | 130 ‡ | 24 3/4 | 32 | 16 1/8 | 21 |
| '43 .. | 36·91 | — | 7·83 | 6·38 | 200 ‡ | 205 ‡ | 33 ‡ | 130 ‡ | 33 1/8 | 32 | 16 1/8 | 21 |
| '44 .. | 39·19 | — | 11·32 | 9·50 | 200 ‡ | 205 ‡ | 40 1/4 ‡ | 130 ‡ | 40 1/4 | 32 | 16 1/8 | 21 |
| '45 .. | 40·27 | — | 12·75 | 10·80 | 200 ‡ | 230 (*b*) | 40 1/2 ‡ | 130 ‡ | 39 1/4 | 31·6 | 15·9 | 21·1 |
| '46 .. | 40·94 | — | 14·87 | 12·14 | 252 | 244 3/8 | 51 | 144 1/2 | 49 1/0 | 35 3/16 | 16 1/4 | 20·7 |
| '47 .. | 47·61 | — | 21·21 | 16·28 | 262 | 248 | 92 1/3 | 208 1/0 | 80 | 58·2 | 30 | 22·7 |
| Average | | | | | | | | | | | | |
| 1904–13 | 11 7/8 | — | 6 1/4 | 5 | 32 1/2 | 36 7/8 | 30 3/8 | 31 3/8 | 18 7/8 | 17 3/8 | 9 | 10 |
| 1890–99 | 10 3/8 | — | 4 1/4 | 3 | 27 | 27 | 26 1/4 | 25 | 12 1/2 | 13 1/4 | 6 1/4 | 10 |
| '78–87 | 9 | — | 6 | 4 1/4 | 33 | 34 | 35 1/2 | 26 1/2 | 15 | 18 1/2 | 8 3/8 | 11 3/4 |
| '67–77 | 12 1/2 | — | 9 | 6 3/4 | 46 | 48 | 43 | 35 | 19 | 21 1/4 | 9 7/8 | 19 3/4 |
| Index Numbers (or Percentages) of Prices, the Average of 1867–77 being 100 | | | | | | | | | | | | |
| 1922 .. | 193 | 994 | 134 | 118 | 191 | | 116 | | 162 | 180 | | 49 |
| '26 .. | 149 | 1,078 | 104 | 115 | 147 | | 151 | | 231 | 170 | | 76 |
| '27 .. | 142 | 990 | 106 | 123 | 181 | | 141 | | 172 | 177 | | 78 |
| '28 .. | 125 | 860 | 121 | 128 | 203 | | 130 | | 178 | 174 | | 91 |
| '29 .. | 129 | 881 | 114 | 114 | 157 | | 126 | | 168 | 156 | | 81 |
| '30 .. | 133 | 784 | 83 | 76 | 121 | | 96 | | 105 | 86 | | 54 |
| '31 .. | 127 | 700 | 66 | 68 | 76 | | 58 | | 84 | 70 | | 43 |
| '32 .. | 130 | 694 | 58 | 72 | 93 | | 70 | | 85 | 71 | | 29 |
| '33 .. | 129 | 750 | 62 | 67 | 106 | | 68 | | 78 | 94 | | 30 |
| '34 .. | 129 | 765 | 74 | 71 | 119 | | 73 | | 74 | 102 | | 35 |
| '35 .. | 130 | 786 | 74 | 80 | 161 | | 80 | | 89 | 96 | | 37 |
| '36 .. | 136 | 825 | 74 | 76 | 133 | | 91 | | 93 | 119 | | 53 |
| '37 .. | 152 | 995 | 69 | 71 | 158 | | 93 | | 104 | 127 | | 86 |
| '38 .. | 171 | 949 | 55 | 54 | 139 | | 77 | | 93 | 88 | | 60 |
| '39 .. | 169 | 958 | 66 | 65 | 174 | | 91 | | 140 | 86 | | 62 |
| '40 .. | 218 | 1,169 | 90 | 93 | 383 | | 163 | | 146 | 142 | | 98 |
| '41 .. | 258 | 1,266 | 101 | 113 | 416 | | 202 | | 139 | 155 | | 106 |
| '42 .. | 279 | 1,285 | 98 | 109 | 427 | | 209 | | 130 | 155 | | 106 |
| '43 .. | 295 | 1,312 | 87 | 95 | 431 | | 209 | | 174 | 155 | | 106 |
| '44 .. | 314 | 1,383 | 126 | 141 | 431 | | 219 | | 212 | 155 | | 106 |
| '45 .. | 322 | 1,462 | 142 | 160 | 457 | | 219 | | 207 | 153 | | 107 |
| '46 .. | 328 | 1,671 | 165 | 180 | 528 | | 251 | | 259 | 167 | | 105 |
| '47 .. | 381 | 2,126 | 236 | 241 | 543 | | 385 | | 421 | 283 | | 114 |

* Port Philip fleece washed nominal since 1895, exactly in proportion with the value of clean wool.
‡ Nominal.
‖ Now No. 1 Oomra, Fine.
¶ Livonian Z.K. from 1921–45. Medium grade continental w/retted in 1946.
†† Lightnings from 1931 to 1942. Daisee ⅜ from 1943.
(*a*) Russian Siretz Group 1, Sort 1 from 1931–33; Jugo-Slav Peasant from 1934–45. Italian S.B. from 1946.
(*b*) Average of 4 months only. Belgian from 1946.

CC-0. In Public Domain. Gurukul Kangri Collection, Haridwar

Digitized by Arya Samaj Foundation Chennai and eGangotri

*Average Prices of Commodities—Contd.*

| No. of Article | 34 | 27–34 | 35A | 35B | 35C | 36A | 36B | 37 | 38 | 39 | 40A | 40B |
|---|---|---|---|---|---|---|---|---|---|---|---|---|
| | Silk | Textiles | Hides | | | Leather | | Tallow | Oil | | | Seeds |
| Year | Tsatlee * | Total | River Plate, Dry | River Plate, Salted | Average Import Price | Dressing Hides | Average Import Price | Town | Palm | Olive | Linseed | Linseed |
| | *s.* per lb. | | *d.* per lb. | *d.* per lb. | *d.* per lb. | *d.* per lb. | *d.* per lb. | *s.* per cwt. | £ per ton | £ per ton | £ per ton | *s.* per qr. |
| 1922 .. | $28\frac{3}{4}$ | — | $9\frac{1}{8}$ | $8\frac{7}{8}$ | 8·06 | $24\frac{1}{3}$ | 36 | $34\frac{5}{8}$ | $34\frac{3}{5}$ | $75\frac{1}{2}$ † | $39\frac{1}{5}$ | $75\frac{1}{2}$ |
| '26 .. | $15\frac{15}{16}$ | — | $10\frac{5}{16}$ | 8 | 9·32 | $21\frac{1}{8}$ | $35\frac{11}{16}$ | $38\frac{1}{6}$ | $37\frac{5}{8}$ | $79\frac{9}{16}$ | $32\frac{1}{8}$ | $63\frac{7}{16}$ |
| '27 .. | $15\frac{7}{16}$ | — | $12\frac{5}{16}$ | $10\frac{7}{16}$ | 9·85 | $22\frac{5}{16}$ | $36\frac{15}{16}$ | $33\frac{7}{8}$ | $34\frac{1}{4}$ | $102\frac{5}{8}$ | $31\frac{3}{4}$ | $64\frac{5}{16}$ |
| '28 .. | 14 | — | $15\frac{7}{16}$ | $11\frac{29}{32}$ | 12·09 | $23\frac{13}{16}$ | $37\frac{7}{16}$ | $36\frac{15}{16}$ | $35\frac{3}{4}$ | $80\frac{7}{16}$ | $29\frac{7}{8}$ | $66\frac{15}{16}$ |
| '29 .. | $13\frac{7}{8}$ | — | $10\frac{15}{16}$ | $8\frac{1}{4}$ | 10·80 | $19\frac{1}{4}$ | $38\frac{1}{4}$ | $36\frac{13}{32}$ | $34\frac{21}{32}$ | 72 | $25\frac{15}{32}$ | $74\frac{1}{8}$ |
| '30 .. | $10\frac{15}{16}$ | — | $6\frac{25}{32}$ | $6\frac{1}{2}$ | 7·80 | $18\frac{1}{2}$ | $33\frac{1}{2}$ | $28\frac{25}{32}$ | $25\frac{1}{4}$ | $52\frac{1}{8}$ | $36\frac{5}{8}$ | $61\frac{15}{16}$ |
| '31 .. | $8\frac{15}{16}$ | — | $5\frac{1}{2}$ | $5\frac{9}{16}$ | 6·12 | $17\frac{3}{4}$ | $32\frac{1}{2}$ | $19\frac{1}{3}$ | $19\frac{7}{16}$ | $53\frac{9}{16}$ | $18\frac{3}{16}$ | $38\frac{7}{8}$ |
| '32 .. | $8\frac{5}{32}$ | — | $4\frac{9}{16}$ | $4\frac{3}{4}$ | 5·47 | $17\frac{3}{32}$ | $28\frac{7}{8}$ | $21\frac{1}{16}$ | $17\frac{5}{8}$ | $57\frac{3}{16}$ | 17 | $38\frac{5}{16}$ |
| '33 .. | $6\frac{3}{4}$ | — | $5\frac{1}{4}$ | $4\frac{11}{16}$ | 5·65 | $17\frac{1}{32}$ | $26\frac{29}{32}$ | $19\frac{27}{32}$ | $15\frac{11}{16}$ | $53\frac{15}{16}$ | $20\frac{3}{4}$ | $39\frac{1}{4}$ |
| '34 .. | $5\frac{7}{16}$ | — | $4\frac{13}{16}$ | $4\frac{7}{8}$ | 5·71 | $17\frac{1}{2}$ | $25\frac{5}{16}$ | $17\frac{3}{4}$ | $13\frac{17}{32}$ | $62\frac{31}{16}$ | $21\frac{13}{32}$ | $42\frac{1}{8}$ |
| '35 .. | $5\frac{13}{32}$ | — | $5\frac{25}{32}$ | $5\frac{1}{8}$ | 5·51 | $17\frac{1}{2}$ | $25\frac{13}{16}$ | $24\frac{5}{8}$ | $19\frac{3}{8}$ | $61\frac{13}{32}$ | $24\frac{13}{32}$ | $43\frac{1}{4}$ |
| '36 .. | $5\frac{25}{32}$ | — | $6\frac{1}{4}$ | 6 | 6·47 | $17\frac{1}{2}$ | $27\frac{11}{32}$ | $23\frac{9}{32}$ | $19\frac{31}{32}$ | $70\frac{31}{16}$ | $28\frac{1}{2}$ | $48\frac{5}{32}$ |
| '37 .. | $8\frac{7}{16}$ | — | $8\frac{21}{32}$ | $7\frac{9}{16}$ | 8·62 | $18\frac{9}{32}$ | $28\frac{5}{16}$ | $23\frac{15}{32}$ | $22\frac{9}{16}$ | $95\frac{23}{32}$ | $31\frac{1}{8}$ | $54\frac{13}{32}$ |
| '38 .. | $7\frac{31}{32}$ | — | $6\frac{31}{32}$ | $5\frac{9}{16}$ | 6·35 | $14\frac{5}{16}$ | $24\frac{3}{32}$ | $17\frac{13}{32}$ | $14\frac{7}{8}$ | $68\frac{19}{32}$ | $26\frac{7}{16}$ | $46\frac{27}{32}$ |
| '39 .. | $13\frac{3}{32}$ | — | $6\frac{3}{4}$ | $6\frac{1}{8}$ | 6·39 | $18\frac{5}{32}$ | $23\frac{1}{16}$ | $16\frac{9}{32}$ | $14\frac{5}{16}$ | $73\frac{15}{16}$ | $29\frac{1}{8}$ | $49\frac{25}{32}$ |
| '40 .. | $17\frac{1}{2}$ | — | 8 | $8\frac{1}{2}$ | 8·50 | $25\frac{7}{32}$ | $23\frac{3}{4}$ | $22\frac{3}{32}$ | 19 | $114\frac{1}{4}$ | $44\frac{3}{32}$ | $66\frac{1}{8}$ |
| '41 .. | $15\frac{21}{32}$ | — | $7\frac{1}{2}$ | $8\frac{1}{2}$ | 8·45 | $24\frac{3}{8}$ | $24\frac{1}{4}$ | $22\frac{1}{2}$ | $20\frac{3}{4}$ | 118 | $41\frac{1}{2}$ | $70\frac{1}{4}$ |
| '42 .. | 16 † | — | $8\frac{5}{8}$ | 9 | 9·25 | 26 | $26\frac{1}{8}$ | $24\frac{3}{16}$ | 23 | 118 | $44\frac{13}{16}$ | $78\frac{9}{16}$ |
| '43 .. | 16 † | — | $8\frac{7}{8}$ | $9\frac{1}{16}$ | 9·49 | 27 | $24\frac{15}{16}$ | $34\frac{1}{8}$ | 36 | 118 † | $48\frac{1}{2}$ | $109\frac{1}{2}$ |
| '44 .. | 16 † | — | $10\frac{1}{16}$ | $9\frac{3}{8}$ | 10·14 | 27 | $28\frac{7}{8}$ | $43\frac{1}{2}$ | $42\frac{1}{4}$ | 118 † | $60\frac{3}{4}$ | $107\frac{3}{4}$ |
| '45 .. | 16 † | — | $10\frac{1}{16}$ | $9\frac{5}{8}$ | 9·42 | 25 | $31\frac{1}{8}$ | $43\frac{1}{2}$ | $42\frac{1}{4}$ | 150 † | 62 | $109\frac{1}{2}$ |
| '46 .. | $44\frac{1}{2}$ | — | $17\frac{7}{8}$ | $15\frac{5}{8}$ | 11·73 | 29 | $38\frac{1}{8}$ | $46\frac{1}{4}$ | $43\frac{3}{8}$ | 270 | $87\frac{7}{8}$ | $130\frac{3}{4}$ |
| '47 .. | $31\frac{3}{8}$ | — | $23\frac{17}{32}$ | $19\frac{7}{12}$ | 21·71 | 40 | $58\frac{5}{8}$ | $57\frac{7}{8}$ | $89\frac{5}{8}$ | 330 | $193\frac{3}{4}$ | $211\frac{3}{4}$ |
| Average | | | | | | | | | | | | |
| 1904–13 | $11\frac{3}{4}$ | — | $9\frac{5}{8}$ | $7\frac{1}{2}$ | $6\frac{7}{8}$ | 16 | 17 | $31\frac{1}{2}$ | $31\frac{1}{4}$ | $43\frac{3}{4}$ | $26\frac{5}{8}$ | $49\frac{1}{2}$ |
| 1890–99 | $11\frac{1}{2}$ | — | $6\frac{1}{2}$ | $5\frac{1}{2}$ | 5 | $13\frac{1}{4}$ | $13\frac{3}{4}$ | 25 | $24\frac{1}{2}$ | 35 | $19\frac{1}{4}$ | 38 |
| '78–87 | 15 | — | $8\frac{5}{8}$ | $6\frac{3}{4}$ | $6\frac{1}{2}$ | 15 | 17 | $35\frac{1}{2}$ | $32\frac{1}{2}$ | 40 | 23 | 46 |
| '67–77 | 23 | — | 9 | 7 | $6\frac{7}{8}$ | 16 | $18\frac{3}{4}$ | 45 | 39 | 50 | 30 | 60 |
| | Index Numbers (or Percentages) of Prices, the Average of 1867–77 being 100 | | | | | | | | | | | |
| 1922 .. | 125 | 1,075 | | 114 | | | 174 | 77 | 89 | 151 | | 127 |
| '26 .. | 69 | 1,063 | | 121 | | | 164 | 75 | 96 | 159 | | 106 |
| '27 .. | 67 | 1,045 | | 142 | | | 172 | 82 | 88 | 205 | | 107 |
| '28 .. | 61 | 1,086 | | 172 | | | 176 | 81 | 92 | 161 | | 108 |
| '29 .. | 60 | 976 | | 129 | | | 166 | 64 | 89 | 144 | | 122 |
| '30 .. | 48 | 669 | | 92 | | | 150 | 43 | 65 | 104 | | 110 |
| '31 .. | 39 | 504 | | 77 | | | 146 | 47 | 51 | 108 | | 63 |
| '32 .. | 35 | 513 | | 66 | | | 132 | 44 | 45 | 114 | | 61 |
| '33 .. | 29 | 534 | | 68 | | | 127 | 39 | 40 | 108 | | 67 |
| '34 .. | 24 | 572 | | 67 | | | 123 | 55 | 35 | 124 | | 71 |
| '35 .. | 24 | 641 | | 69 | | | 125 | 52 | 50 | 123 | | 75 |
| '36 .. | 25 | 646 | | 82 | | | 129 | 52 | 51 | 140 | | 85 |
| '37 .. | 37 | 745 | | 109 | | | 134 | 39 | 58 | 192 | | 95 |
| '38 .. | 35 | 601 | | 81 | | | 110 | 36 | 38 | 137 | | 81 |
| '39 .. | 57 | 741 | | 84 | | | 119 | 49 | 37 | 148 | | 88 |
| '40 .. | 76 | 1,191 | | 109 | | | 141 | 50 | 49 | 228 | | 122 |
| '41 .. | 68 | 1,300 | | 107 | | | 135 | 54 | 53 | 236 | | 124 |
| '42 .. | 70 | 1,304 | | 116 | | | 150 | 76 | 59 | 236 | | 137 |
| '43 .. | 70 | 1,327 | | 120 | | | 149 | 81 | 92 | 236 | | 176 |
| '44 .. | 70 | 1,460 | | 132 | | | 161 | 97 | 108 | 236 | | 187 |
| '45 .. | 70 | 1,515 | | 129 | | | 161 | 97 | 108 | 300 | | 190 |
| '46 .. | 193 | 1,848 | | 199 | | | 194 | 103 | 111 | 540 | | 243 |
| '47 .. | 136 | 2,359 | | 277 | | | 284 | 129 | 230 | 660 | | 450 |

* Common New Style from 1921 to 1936. China, Extra "A" from 1937–46; Italian in 1947. † Nominal.

CC-0. In Public Domain. Gurukul Kangri Collection, Haridwar

Digitized by Arya Samaj Foundation Chennai and eGangotri



*Average Prices of Commodities—Contd.*

| No. of Article | 41A ‡ | 41B ‡ | 41C ‡ | 41 | 42 | 43 | 44 | 45A | 45B | 35–45 | 20–45 | 1–45 |
|---|---|---|---|---|---|---|---|---|---|---|---|---|
| | Petroleum * | | | | Soda | | Indigo | Timber | | | | |
| Year | Motor Spirit c.i.f. | Kerosene (Burning Oil) c.i.f. | Gas Oil c.i.f. | Mean of 41A, 41B and 41C | Crystals | Nitrate of Soda | Bengal, Good Consuming | Hewn, Average Import Price | Sawn or Split, Average Import Price | Sundry Materials Total | Materials Total | Grand Total |
| | *d.* per imp. gall. | *d.* per imp. gall. | *d.* per imp. gall. | | *s.* per ton | *s.* per cwt. | *s.* per lb. | *s.* per load | *s.* per load | | | |
| 1922 .. | 15·89 | 6·32 | 3·98 | — | 123 | 14 1/3 | 9 5/8 | 46 5/8 | 117 1/2 | — | — | — |
| '26 .. | 9·21 | 5·66 | 4·25 | — | 100 | 13 1/4 | 5 5/8 | 48 23/32 | 107 | — | — | — |
| '27 .. | 7·25 | 5·15 | 4·23 | — | 100 | 12 9/16 | 5 1/2 | 45 1/16 | 107 5/16 | — | — | — |
| '28 .. | 5·96 | 4·48 | 3·32 | — | 100 | 10 31/32 | 5 1/2 | 45 7/8 | 111 5/32 | — | — | — |
| '29 .. | 6·73 | 4·87 | 3·21 | — | 100 | 10 1/4 | 5 1/2 | 44 1/4 | 107 21/32 | — | — | — |
| '30 .. | 6·52 | 4·54 | 3·21 | — | 100 | 9 27/32 | 5 1/2 | 44 1/4 | 102 9/16 | — | — | — |
| '31 .. | 3·63 | 3·10 | 2·33 | — | 100 | 9 1/8 | 5 1/2 | 37 19/32 | 83 3/8 | — | — | — |
| '32 .. | 3·97 | 3·34 | 2·39 | — | 100 | 8 5/8 | 5 1/2 | 35 1/2 | 75 1/16 | — | — | — |
| '33 .. | 3·43 | 2·94 | 2·48 | — | 100 | 8 11/32 | 5 1/2 | 31 7/8 | 75 19/32 | — | — | — |
| '34 .. | 3·28 | 2·65 | 2·45 | — | 100 | 7 13/16 | 5 1/2 | 31 1/4 | 79 13/32 | — | — | — |
| '35 .. | 3·51 | 2·88 | 2·32 | — | 100 | 7 5/8 | 5 1/2 | 32 1/4 | 73 5/32 | — | — | — |
| '36 .. | 3·77 | 2·76 | 2·34 | — | 100 | 7 5/8 | 5 3/4 | 37 9/16 | 78 27/32 | — | — | — |
| '37 .. | 4·52 | 3·71 | 3·14 | — | 100 | 7 25/32 | 5 3/4 | 58 3/8 | 103 7/32 | — | — | — |
| '38 .. | 4·08 | 3·49 | 3·22 | — | 100 | 8 | 5 3/4 | 61 3/32 | 94 5/16 | — | — | — |
| '39 .. | 5·00 | 3·71 | 3·61 | — | 100 | 8 1/8 | 5 3/4 | 57 9/16 | 107 9/32 | — | — | — |
| '40 .. | 5·79 | 5·68 | 5·31 | — | 100 | 9 7/8 | 5 3/4 † | 106 25/32 | 169 13/16 | — | — | — |
| '41 .. | 6·97 | 5·95 | 5·93 | — | 100 | 13 1/2 | 5 3/4 † | 191 1/16 | 214 7/16 | — | — | — |
| '42 .. | 7·77 | 7·00 | 7·07 | — | 102 1/2 | 13 1/2 | 5 3/4 † | 235 1/8 | 236 1/4 | — | — | — |
| '43 .. | 8·93 | 7·51 | 7·61 | — | 107 1/2 | 13 1/2 | 5 3/4 † | 269 | 246 1/4 | — | — | — |
| '44 .. | 8·31 | 6·78 | 6·83 | — | 107 1/2 | 15 1/4 | 6 † | 222 15/16 | 273 15/16 | — | — | — |
| '45 .. | 6·23 | 5·33 | 5·38 | — | 107 1/2 | 15 1/4 | 6 † | 190 1/2 | 235 1/4 | — | — | — |
| '46 .. | 5·81 | 5·21 | 5·20 | — | 107 1/2 | 16 1/8 | 6 † | 184 7/8 | 258 1/2 | — | — | — |
| '47 .. | 7·69 | 6·83 | 6·52 | — | 107 1/2 | 17 7/8 | 7 † | 187·43 | 289·20 | — | — | — |
| Average | | | | | | | | | | | | |
| 1904–13 | BASE, 1922 | | | — | 60 | 10 5/8 | 3 | 38 | 56 | — | — | — |
| 1890–99 | | | | — | 53 | 8 1/4 | 4 3/8 | 40 | 45 | — | — | — |
| '78–87 | | | | — | 62 | 12 1/2 | 6 | 47 | 47 | — | — | — |
| '67–77 | | | | — | 92 | 14 | 7 1/4 | 60 | 54 | — | — | — |
| | Index Numbers ( or Percentages) of Prices, the Average of 1867–77 being 100 | | | | | | | | | | | |
| 1922 .. | ‡ 100 | ‡ 100 | ‡ 100 | 100 | 134 | 102 | 128 | 143 | | 1,339 | 3,408 | 5,873 |
| '26 .. | 58 | 90 | 107 | 85 | 109 | 95 | 78 | 137 | | 1,235 | 3,376 | 5,643 |
| '27 .. | 46 | 82 | 106 | 78 | 109 | 90 | 76 | 134 | | 1,276 | 3,311 | 5,477 |
| '28 .. | 37 | 71 | 83 | 64 | 109 | 78 | 76 | 138 | | 1,256 | 3,202 | 5,366 |
| '29 .. | 42 | 77 | 81 | 67 | 109 | 73 | 76 | 134 | | 1,190 | 3,047 | 5,148 |
| '30 .. | 41 | 72 | 81 | 65 | 109 | 70 | 76 | 129 | | 1,034 | 2,487 | 4,313 |
| '31 .. | 23 | 50 | 60 | 44 | 109 | 65 | 76 | 106 | | 890 | 2,094 | 3,673 |
| '32 .. | 25 | 53 | 60 | 46 | 109 | 62 | 76 | 97 | | 855 | 2,062 | 3,571 |
| '33 .. | 22 | 47 | 62 | 44 | 109 | 60 | 76 | 94 | | 837 | 2,121 | 3,529 |
| '34 .. | 21 | 42 | 62 | 42 | 109 | 56 | 76 | 97 | | 839 | 2,176 | 3,635 |
| '35 .. | 22 | 46 | 60 | 43 | 109 | 54 | 76 | 92 | | 871 | 2,298 | 3,745 |
| '36 .. | 24 | 42 | 60 | 42 | 109 | 54 | 79 | 102 | | 925 | 2,414 | 3,945 |
| '37 .. | 28 | 59 | 79 | 55 | 109 | 56 | 79 | 142 | | 1,081 | 2,821 | 4,581 |
| '38 .. | 26 | 55 | 81 | 54 | 109 | 57 | 79 | 136 | | 921 | 2,471 | 4,071 |
| '39 .. | 31 | 60 | 91 | 61 | 109 | 58 | 79 | 145 | | 964 | 2,663 | 4,247 |
| '40 .. | 36 | 90 | 133 | 86 | 109 | 70 | 79 | 243 | | 1,285 | 3,645 | 5,760 |
| '41 .. | 44 | 94 | 150 | 96 | 109 | 93 | 79 | 356 | | 1,438 | 4,004 | 6,379 |
| '42 .. | 49 | 111 | 178 | 113 | 111 | 96 | 79 | 413 | | 1,564 | 4,153 | 6,812 |
| '43 .. | 56 | 119 | 199 | 122 | 117 | 96 | 79 | 452 | | 1,715 | 4,354 | 6,978 |
| '44 .. | 52 | 107 | 172 | 110 | 117 | 109 | 83 | 436 | | 1,776 | 4,619 | 7,221 |
| '45 .. | 39 | 84 | 135 | 86 | 117 | 109 | 83 | 373 | | 1,753 | 4,730 | 7,375 |
| '46 .. | 36 | 82 | 131 | 83 | 117 | 115 | 83 | 389 | | 2,177 | 5,696 | 8,365 |
| '47 .. | 48 | 108 | 164 | 107 | 117 | 128 | 97 | 418 | | 2,897 | 7,382 | 10,353 |

* Prior to 1922, Kerosene Burning Oil (in barrels), base period 1873–77; from 1922 c.i.f. values per imperial gallon of Motor Spirit, Kerosene (Burning Oil) and Gas Oil, base period 1922.

† Nominal.

‡ Index-numbers not included in the general average.

CC-0. In Public Domain. Gurukul Kangri Collection, Haridwar

Digitized by Arya Samaj Foundation Chennai and eGangotri



# REPORT OF THE COUNCIL

*For the* FINANCIAL YEAR *ended December* 31*st*, 1947, *and for the* SESSIONAL YEAR *ending July* 20*th*, 1948, *presented at the* ONE HUNDRED AND FOURTEENTH ANNUAL GENERAL MEETING *of the* ROYAL STATISTICAL SOCIETY, *held at the London School of Hygiene and Tropical Medicine, W.C.* 1, *on July* 20*th*, 1948.

THE Council has the honour to submit its One Hundred and Fourteenth Report.

*Loyal Address*

On the marriage of Her Royal Highness Princess Elizabeth to the Duke of Edinburgh on November 20th, 1947, the President and Council, on behalf of the Fellows of the Society, humbly submitted the following Loyal Address to His Majesty the King, Patron of the Society.

"TO THE KING'S MOST EXCELLENT MAJESTY:

May it please your Majesty,

WE, the President and Council, representing the general body of Fellows of the ROYAL STATISTICAL SOCIETY, present our humble duty and beg leave to offer to Your Majesty, the Patron of our Society, our sincere and respectful congratulations on the marriage of Her Royal Highness the Princess Elizabeth to Lieutenant Philip Mountbatten, R.N.

THE Society has always taken pride in the fact that it has been favoured by Royal approbation since 1840 when His Royal Highness the Prince Consort consented to become its first Patron. The Fellows are proud that the connexion with the Royal House so begun has continued to the present day when we are honoured by the privilege of having as Patron Your Most Gracious Majesty.

WE pray that Your Majesty, with Her Most Gracious Majesty the Queen, may long live to witness the married happiness and prosperity of Her Royal Highness the Princess Elizabeth and to continue to reign over the peoples united in allegiance to the British Crown."

*The following letter, dated December* 1*st*, 1947, *was received from the Home Secretary:—*

WHITEHALL,
LONDON, S.W. 1;
1*st December*, 1947.

"SIR,

I have had the honour to lay before The King the loyal and dutiful Address of the Royal Statistical Society on the occasion of the marriage of Her Royal Highness the Princess Elizabeth to His Royal Highness the Duke of Edinburgh.

I have it in command from The King to convey to you, as President of the Society, the sincere thanks of Their Majesties for the kindness and cordiality of these congratulations and good wishes for the future happiness and prosperity of Their Royal Highnesses, which They were specially pleased to receive on this happy occasion.

I am, Sir,
Your obedient Servant,
J. CHUTER EDE."

The President,
Royal Statistical Society.

CC-0. In Public Domain. Gurukul Kangri Collection, Haridwar

Digitized by Arya Samaj Foundation Chennai and eGangotri



### *The Statistical and Social Inquiry Society of Ireland*

In October, 1947 the Statistical and Social Inquiry Society of Ireland celebrated its Centenary in Dublin. The Council is glad to report that one of the Honorary Secretaries of the Society, Dr. C. Oswald George, was able to represent the Society on this important occasion and to convey personally its congratulations and good wishes to so distinguished a sister Society.

### *Vice-Presidents*

For the session 1947/48 the President, acting under Bye-Law 28, appointed as Vice-Presidents of the Society Mr. H. Campion, Mr. R. Glenday, Professor A. Bradford Hill and Professor E. S. Pearson.

### *Number of Fellows*

During the calendar year 1947 the number of new Fellows elected into the Society (including a few previous Fellows restored to the roll) was 263. This large figure is only slightly less than the record total of 287 elections that took place in the previous year. Losses by death, withdrawal and default numbered 75, so that there was a net increase of 188 compared with the figure of 231 in 1946. At the end of 1947 the number on the roll was 1,836. The slight increase in the loss rate in 1947 was no doubt due to the raising of the annual subscription, which was approved by the Special General Meeting held on November 20th, 1947. The Council notes, however, with satisfaction that this increase in the subscription has been regarded as equitable, under present conditions, by the vast majority of the Fellows. It would also report, with gratitude, that some Fellows aged over 60 have regarded the increase as so reasonable that they have waived their right to take advantage of the clause in the bye-laws which allows them to continue at the previous lower rate.

In addition to the numbers given in the table below there were, at December 31st, 1947, 18 Honorary Fellows, including 7 who are Presidents for the time being of other Societies concerned with the advancement of statistical knowledge. Within the ordinary Fellowship at the end of 1947 there were 107 Fellows representing corporate bodies or institutions which desired to associate themselves in this way with the work of the Society. The Council greatly appreciates the value of this association and the very wide field of statistics that is thus represented in the Fellowship; it hopes that Fellows will do all they can to encourage corporate bodies to seek representation.

| Calendar Year | Number of Fellows (excluding Honorary Fellows) | | |
|---|---|---|---|
| | Lost by death, withdrawal or default | Elected, or restored to the roll | On the roll at December 31st |
| 1937 | 45 | 59 | 1,063 |
| 1938 | 56 | 76 | 1,083 |
| 1939 | 39 | 64 | 1,108 |
| 1940 | 76 | 47 | 1,079 |
| 1941 | 65 | 60 | 1,074 |
| 1942 | 69 | 74 | 1,079 |
| 1943 | 61 | 121 | 1,139 |
| 1944 | 29 | 159 | 1,269 |
| 1945 | 29 | 177 | 1,417 |
| 1946 | 56 | 287 | 1,648 |
| 1947 | 75 | 263 | 1,836 |

### *Elections and Restorations*

From June, 1947 to May, 1948, inclusive, 256 Fellows were elected or restored to the roll, and at the end of May, 1948 the total number of Fellows was 1,891. It is clear that the 2,000 level will very soon be reached. The names of Fellows elected from June, 1947 to May, 1948 are listed in Appendix A.

CC-0. In Public Domain. Gurukul Kangri Collection, Haridwar

Digitized by Arya Samaj Foundation Chennai and eGangotri



### *List of Fellows*

In the latter half of 1947 the Council renewed publication of the list of Fellows, the first to be issued since 1938, and a copy was sent to every Fellow on the roll. With the continued high rate of new elections it is clearly desirable that a new and comprehensive list should be published annually as in the pre-war years. Though, with the present paper shortage, this presents difficulties, the Council hopes to issue a revised list in the autumn. The attention of Fellows is called to the necessity of notifying promptly to the Assistant Secretary any changes of description or address.

### *Losses by Death*

The Council regrets to report that during the year ending May 31st, 1948 the Society lost by death the undermentioned Fellows:—

| | Date of election |
|---|---|
| Huber, Michel (Honorary Fellow) | 1937 |
| Bailes, Hugh Hasland, A.C.A. | 1929 |
| *Baldwin of Bewdley, Rt. Hon. Earl | 1919 |
| Bilbrough, Norman Heslop | 1931 |
| *Boag, George L. | 1929 |
| Cambridge, Edgar Walter John | 1933 |
| Cunningham, Harry, F.S.A.A. | 1936 |
| *cp*Ellinger, Barnard, C.B.E. | 1908 |
| Fellows, R. H. | 1894 |
| *cp**Gibbon, Sir Gwilym, C.B., D.Sc. | 1918 |
| Hart, Charles | 1913 |
| Jones, Arthur Emrys | 1943 |
| Kuczynski, Robert René | 1933 |
| Larkin, Sydney | 1938 |
| Polwarth, John Bruce, A.S.A.A. | 1916 |
| *Pontifex, Bryan, F.C.A., F.S.A., F.C.I.S. | 1896 |
| Shearer, Alexander | 1921 |
| Shove, Gerald Frank, M.A. | 1913 |
| Steadman, Frederick | 1921 |
| Vere-Hodge, Harry Kirke | 1948 |
| *Walker, James | 1900 |

* Life Fellow.

*c* Served on Council.
*p* Contributed to *Proceedings*.

Monsieur Michel Huber had devoted the whole of his working life to the science and practice of statistics. He played a large part in improving French statistics, particularly in the field of demography, and in advancing the teaching of the subject in France. He was, perhaps, still better known to the statisticians of other countries for his activities in the sphere of international statistics—with the International Statistical Institute, of which he was a Vice-President, and with the League of Nations and the International Labour Office, in both of which he served as president of their expert statistical committees.

Lord Baldwin had been a Fellow of the Society for nearly 30 years, and though he took no active part in its work the Society may be proud to have had on its roll so distinguished a servant of his country.

Mr. Barnard Ellinger, who had been a partner in Ellinger & Company, shipping merchants, was a well-known and particularly clear writer and lecturer on economic and financial subjects. Coming from Manchester, he was also deeply concerned with the Lancashire cotton industry and the effects upon it of Japanese competition, a subject upon which he read a paper to the Society in 1930 (with Mr. Hugh Ellinger). For many years he played an active part in the work of the Society, serving repeatedly on the Council between 1923 and 1945, and being appointed a Vice-President in 1938–40 and again in 1943–45. He was a past-president of the Manchester Statistical Society. His work on the Disposals Board after the 1914–18 war was recognized by his being made C.B.E. in 1921.

Sir Gwilym Gibbon had a long and distinguished career in the Civil Service, which he entered as a Second Division clerk in 1893, and left in 1935 as Director of the Local Government Division

CC-0. In Public Domain. Gurukul Kangri Collection, Haridwar

Digitized by Arya Samaj Foundation Chennai and eGangotri



of the Ministry of Health. With a wide knowledge of town planning, local legislation and finance he played a large part in the development of the Local Government Act of 1929. Elected a Fellow of the Society in 1918, he served actively on the Council between 1938 and the day of his death, and was appointed a Vice-President in 1940 and again in 1945 and 1946.

Dr. Robert Kuczynski, who died at the age of 71, occupied with distinction, at the London School of Economics of London, the first Readership in Demography to be established in this country. He wrote widely and lucidly in his chosen field, being particularly prominent in the development of the gross and net reproduction rates and their application to the populations of the world. In his latter years he became closely associated with demographic surveys of colonial territories, and since 1944 had acted as demographic adviser to the Colonial Office. He did much to promote in the public, both lay and scientific, serious concern with the population problems of the day.

### *Meetings of the Society*

A Special General Meeting of the Society was held on November 20th, 1947, when it was resolved that the annual subscription (unchanged since 1834) and the composition fees provided for the bye-laws should from November 21st, 1947 be increased by 50 per centum except in the cases of Fellows who shall have attained the age of sixty years or paid at least twenty-five annual subscriptions.

Ordinary General Meetings have been held in each month from November, 1947 to June, 1948 in the Lecture theatre of the London School of Hygiene and Tropical Medicine.

The following papers have been read, and the number of Fellows and others present has not often been less than 100, and occasionally over or approaching 200:—

1947

November 20th . HERON, Dr. D. Presidential Address on the Financial Position of the Society.
December 16th . COTTON, H. The Collection of Morbidity Data from Hospitals.

1948

January 20th . Discussion on Cost of Living Subsidies, opened by Professor J. H. JONES.
February 17th . WALLACE, J. The Fire Census and Technical Field Intelligence work of the Fire Research Organization.
March 16th . . ANSCOMBE, F. J. The Validity of Comparative Experiments.
April 27th . . Discussion on the Teaching of Statistics, opened by Dr. J. WISHART.
May 18th . . DESAI, R. C. Consumer Expenditure in India, 1931–2 to 1940–1.
June 15th . . LESER, C. E. V., and SINGER, H. W. Industrial Productivity in England and Scotland.

Accepting with pleasure a suggestion from Fellows of the Society working in, or near, Oxford the Council has arranged to hold a week-end Conference in Oxford on Saturday, October 2nd and Sunday, October 3rd. Over one hundred Fellows have signified their intention of being present.

### *The Research Section*

The work of the Research Section has been developed and directed by the Section's Committee, composed of the following Fellows: Mr. F. J. Anscombe, Mr. G. Barnard, Dr. H. E. Daniels, Mr. E. C. Fieller, Dr. D. J. Finney, Dr. H. O. Hartley, Dr. J. O. Irwin, Mr. H. L. Seal, Dr. L. Solomon, Mr. R. Stone, Dr. B. O. Welch, Dr. F. Yates, and, representing the Council, Professor M. S. Bartlett and Mr. M. G. Kendall. Dr. J. O. Irwin was elected Chairman and Dr. H. E. Daniels Secretary.

Four meetings have been held during the session, with an average attendance of about 60 persons. The papers read were as follows:—

1947

December 10th . A Study of the Autoregressive Nature of the Time Series Used for Tinbergen's Model of the Economic System of the United States 1919–1932, by Dr. G. H. Orcutt.

1948

February 3rd . Control by Gauging, by Mr. W. L. Stevens.
April 6th . . The Utilization of Multiple Measurements in Problems of Biological Classifications by Mr. C. R. Rao.
May 27th . . Regression Analysis Applied to Time Series, by Mr. D. G. Champernowne.

CC-0. In Public Domain. Gurukul Kangri Collection, Haridwar

Digitized by Arya Samaj Foundation Chennai and eGangotri



### *The Industrial Applications Section*

A Section Committee has continued to guide the work of the Industrial Applications Section, and has co-ordinated the functions of the separately organized Local Groups and linked them with the Society. This Committee has consisted of three members appointed by the Council (Dr. B. Dudding, Dr. J. O. Irwin and Mr. W. J. Jennett) and two representatives of each Local Group. Mr. D. J. Desmond was elected Chairman of the Section, and Mr. W. J. Jennett Honorary Secretary.

The main activity of the Section has been the discussion meetings of Local Groups, as arranged by the Group Committees. The officers of these Committees were:—

| *Group* | *Chairman* | *Honorary Secretary* |
|---|---|---|
| Birmingham and District . . | Mr. V. E. Gough. | Mr. D. J. Desmond. |
| London . . . . . | Mr. K. A. Brownlee. | Miss J. Keen. |
| Sheffield . . . . . | Mr. F. C. Turner. | Mr. J. I. Morley. |
| North-Eastern . . . . | Mr. N. J. Squirrel. | Mr. J. B. Nadauld. |
| Tees-side (Sub-Group) . . . | Dr. G. I. Higson. | Mr. J. T. Richardson. |

At the end of 1947 the total membership numbered about 500, including some 200 Fellows. During the Session 36 meetings have been held, 7 in Birmingham, London, Sheffield and Newcastle, 4 in Stockton-on-Tees, 3 in Middlesbrough, and 1 in Lemington-on-Tyne. The Section has continued to explore the potentialities of other areas, and is sponsoring meetings in Crumlin, Monmouthshire, at the first of which Dr. Dudding and Mr. Jennett spoke on "Applied Statistics and Industrial Efficiency."

The subjects for discussion have been as follows:—

*Birmingham and District Group*

| | |
|---|---|
| 1947 | |
| October 1st . | Economics Statistics—Mr. F. A. Friday. |
| November 5th . | Methods of Forecasting and Preventing Accidents—Mr. L. T. Wilkins. |
| December 4th . | Guarantees of Performance—Mr. E. T. Norris. |
| 1948 | |
| February 4th . | The Design of Experiments with Special Reference to the Chemical Industry—Mr. K. A. Brownlee. |
| March 3rd . . | A Statistical Case Book—Mr. A. E. Shaw. |
| April 7th . . | Statistics Applied to Pottery Problems—Dr. D. G. Beech. |
| May 5th . . | Probability and Its Use to the Experimenter—Mr. E. D. van Rest. |

*London Group*

| | |
|---|---|
| 1947 | |
| October 3rd . | The Organization of a Market Research Department—Mr. A. Wharton. |
| November 7th . | Acceptance Inspection with Special Reference to Sequential Methods—Mr. D. Newman. |
| December 5th . | The Mathematics Division of the National Physical Laboratory, with Particular Reference to Statistical Methods—Mr. E. C. Fieller. |
| 1948 | |
| February 6th . | Probability and Its Use to the Experimenter—Mr. E. D. van Rest. |
| March 5th . . | Consumer Research in the Electricity Supply Industry—Mr. W. Pridmore. |
| April 2nd . . | Some Short Cuts in Statistical Calculations—Dr. H. O. Hartley. |
| May 7th . . | Factorial Regression Analysis—Mr. P. Lyle. |

*Sheffield Group*

| | |
|---|---|
| 1947 | |
| September 25th . | An Enquiry into the Causes of Defects in Hardened and Tempered Steel Strip—Mr. A. Whitehouse. |
| October 30th . | Regression Analysis Applied to Industrial Problems—Mr. P. Lyle. |
| November 24th . | Examinations Examined—Mr. F. C. Turner. |
| 1948 | |
| January 29th . | A Brains Trust on the Application of Statistical Methods to Local Industry. |
| February 26th . | Graphical Methods for the Demonstration of Simple Statistical Relations—Miss B. Pickersgill. |
| April 1st . . . | The Application of Statistical Quality Control to a Steel Strip Mill—Mr. G. Komlosy. |
| April 29th . . | Statistical Methods Applied to the Inspection and Testing of Aeronautical Materials —Mr. R. A. Nowlan. |

CC-0. In Public Domain. Gurukul Kangri Collection, Haridwar

Digitized by Arya Samaj Foundation Chennai and eGangotri



*North-Eastern Group*

1947

October 22nd . The Organization of a Market Research Department—Mr. A. S. Wharton.
November 19th . Acceptance Inspection with Special Reference to Sequential Methods—Mr. D. Newman.
December 17th . Statistics and the Analytical Laboratory—Mr. J. T. Richardson.

1948

January 21st . A General Discussion on "Are Statistics Worth While?"
February 18th . The Factory's Reaction to Statistics—Mr. J. Elliott.
March 17th . Some Industrial Applications of Statistics, with Particular Reference to the Textile Industry—Mr. F. R. de G. Hewitt.
April 13th . Applied Statistics and the Glass Industry—Dr. B. P. Dudding.
May 19th . Experiments in Industrial Chemistry—Mr. K. A. Brownlee.

*Tees-side Sub-Group*

1947

October 23rd . Consumer Surveys—Mr. A. S. Wharton.
November 20th . Sampling—Mr. D. Newman.
December 18th . Statistical Methods in an Analytical Laboratory—Mr. H. N. Wilson and Mr. J. T. Richardson.

1948

January 22nd . Some Actual Applications of Statistics to Steel Problems—Mr. A. W. Swan.
April 6th . Correlation Problems in the Chemical Industry—Dr. O. L. Davies.
April 22nd . Some Applications of Statistical Methods to Refractory Test Data—Mr. J. Mackenzie.
May 20th . The Use of the Factorial Experiment for Investigating Chemical Processes—Mr. K. A. Brownlee.

The arrangements whereby members can borrow copies of papers read to Group meetings of the Section and filed in the Society's Library have resulted in a demand which confirms the need for such facilities in the absence of publication.

*The Study Section*

The Committee of the Study Section has been as follows: Chairman, Miss Iris Douglas; Honorary Secretary, Mr. W. R. Buckland; other members, Mrs. J. G. Cox, Mr. J. I. Mason, Mr. D. Newman, Mr. L. T. Wilkins, and, representing the Council, Mr. R. F. George and Mr. G. R. White. During the session eight meetings have been held and have been well attended with an average of some forty Fellows, Members of the Section and guests. A wide range of subject matter has been introduced as the following list shows:—

1947

October 23rd . Some Aspects of Economic Statistics—Mr. F. A. Friday
November 12th . Current Trends in Market Research in U.S.A.—Dr. Mark Abrams.
December 11th . The Interpretation of Banking and Financial Statistics—Mr. G. Tether.

1948

January 14th . The Continuous Census, discussion opened by Mr. E. Grebenik.
February 11th . The Present Position of Teaching in Statistics: prepared discussion followed by open forum.
March 10th . Statistical Analysis in Meteorology—Miss N. Carruthers.
April 14th . Analysis of Time Series: open forum introduced by Mr. W. R. Buckland.
May 12th . Annual General Meeting and Review of Progress.

These meetings have all been held at the Lighting Service Bureau of the Electric Lamp Manufacturers' Association, and the Council is deeply indebted to the E.L.M.A. for providing such admirable accommodation both for the meetings of this Section and of the London Group of the Industrial Applications Section.

CC-0. In Public Domain. Gurukul Kangri Collection, Haridwar

Digitized by Arya Samaj Foundation Chennai and eGangotri



### *The Society's Examinations*

The first Certificate Examination open to Fellows of the Society was held on December 19th and 20th, 1947, when twenty-three candidates sat the examination—twenty offering all four parts of the examination and three offering Sections A and B only. Seven candidates satisfied the examiners in Sections A and B only and one in Sections C and D only. The following ten Fellows were successful in all four sections and were awarded the Society's Certificate:—

John Brown.
Gabriel Armand Garreau.
Roy Henry Garstang.
Joan Ethel Keen.
Gerald Victor Owen.
Henry Palca.
Wilfrid Alan Pridmore.
John Taylor.
Denis Hugh Ward.
William Arthur Wilson.

The examination was held in the Department of Medical Statistics at the London School of Hygiene and Tropical Medicine, and the Council gratefully acknowledges the granting of these facilities.

The Council has approved regulations and a syllabus for the examination for the Society's Diploma, particulars of which will be published in the *Journal* but have already been sent to all Fellows.

Further examinations for the Certificate will be held in September, 1948 and April, 1949, and the first examination for the Diploma will be held concurrently with the latter.

The Council is very greatly indebted to its Examinations Committee which, under the chairmanship of the President, has undertaken this very heavy piece of work on its behalf. In addition to the President its members have been Professor R. G. D. Allen, Mr. D. J. Finney, Mr. R. F. George, Mr. M. G. Kendall, Professor E. S. Pearson, Mr. R. Stone and Dr. F. Yates.

### *Frances Wood Memorial Prize*

The Council has offered the Frances Wood Memorial Prize for competition in 1948 for, as customary, the best investigation, on statistical lines, of any problem bearing directly or indirectly upon the economic or social conditions of the people. Competitors, who need not be Fellows of the Society, must submit their essays not later than December 31st, 1948.

### *The Journal and the Supplement*

During the session the Council appointed a Manuscripts Committee consisting of the President, Dr. H. E. Daniels, Dr. H. O. Hartley, Mr. R. F. George, Professor Bradford Hill, Dr. J. O. Irwin, Mr. W. J. Jennett and Dr. B. L. Welch. It was asked to draft a notice to Fellows of the Society and Members of its Sections as a guide to them in preparing papers for reading at Ordinary Meetings of the Society or of the Research Section, or for publication without reading, in the *Journal* or *Supplement*. The Council adopted the report of the Committee and has published the notice in the *Journal*. Copies are also available on application to the Assistant Secretary. On behalf of Fellows the Council thanks the Committee for its very helpful document, which should materially assist both the writers of papers and the Honorary Editors of the *Journal* and *Supplement*.

The greatly increased circulation of the *Journal* resulting from the expansion in the number of Fellows has inevitably put a severe strain upon the Society's allotted paper supply—based upon the pre-war consumption. The Council, with regret, has therefore been forced to continue to restrict the number of reprints available to authors of papers. It has, however, been active both in reviewing the situation and in seeking an increased allotment of paper. It believes that with the expansion of statistical work in central and local government, in industry and in social and scientific research, the circulation of the Society's publications should be aided to the utmost extent even if it must continue in these times of stringency to be subject to some restriction.

CC-0. In Public Domain. Gurukul Kangri Collection, Haridwar

Digitized by Arya Samaj Foundation Chennai and eGangotri



### *The Library*

In the maintenance and development of the Society's Library and the services provided therein the Council gratefully acknowledges the work of its Library Committee (Dr. C. O. George, Professor Bradford Hill and Dr. J. O. Irwin). During the calendar year 1947 the services given to Fellows and non-Fellows authorized to use the Library may be summarized as follows, the figures in brackets showing the corresponding values for the previous year:—

385 (399) Fellows or approximately 21 per cent. of the total number borrowed books. These Fellows made by post or in person 1,534 (1,587) effective applications, i.e. their requests to borrow a book or books could be met. They borrowed 2,691 (2,939) volumes. The number of visits to the reading room for use and study of books and material on the spot numbered 667 (1,953), as measured by signatures in the Register. Non-serial works added to the Library during the year amounted to 317 (454) volumes.

These figures reveal some slight check to the increasing use that has been made of the Library in the post-war years. This has been due, it is believed, not to any reduction in the activities of Fellows, but rather to some special circumstances of the year, including the cuts in the electricity supply (heating and lighting) in the early months of the severe winter, some necessary repairs to the Reading Room and a temporary shortage in the Library staff. The very large fall in the recorded number of visits to the Reading Room may well be largely artificial, and the Council appeals to Fellows to sign the Reading Room Register so that an accurate measure of the services thus provided may be available.

The Library was closed for a month in the summer as in pre-war days, providing an opportunity for the cleaning of books and shelving.

The number of books presented to the Library in recent years has been considerably smaller than in pre-war years, but the Council is greatly indebted to Fellows for donations in 1947, particularly for books and statistical documents which in present circumstances would otherwise be unobtainable. It appeals to all Fellows publishing books or papers to assist so far as they can in the development of the Society's Library.

### *Housing*

In 1936 the Society gratefully accepted the offer of the London School of Economics to lease to it the greater part of No. 4 Portugal Street. While this lease does not expire until 1957, the greatly increased requirements of the Society, particularly for adequate accommodation for its Library, makes it necessary already to consider the future housing of the Society. For this purpose the Council appointed a Housing Committee, consisting of the President, Dr. C. O. George, Professor M. Greenwood, Dr. E. C. Snow, Professor Bradford Hill, Professor J. H. Jones and Sir Alexander Carr-Saunders. The Committee has made some preliminary estimates of the Society's present and future needs, and some inquiries into possible ways of meeting them. The Council would welcome any advice or assistance that Fellows can offer in this very difficult problem.

### *The International Statistical Institute*

It was pointed out in the Council's 113th Annual Report that the activities of the International Statistical Institute had always been a matter of great interest to the Society, and that Mr. M. G. Kendall had agreed to attend the Washington Conference in September 1947 on its behalf. This Washington meeting was so expanded in scope as to develop into a set of World Statistical Conferences attended by over 600 delegates from 55 nations, and a number of other English statisticians were present. A bound and printed volume of the papers read will be deposited in the Library of the Society.

At the final meeting of the I.S.I. a Bureau was elected and a revision of the Institute's Statutes was approved for circulation to all members for a postal ballot. Mr. Kendall was invited to be present at the meetings of the Institute and its Editing Committee at which this revision was carried out and adopted and was thus able, throughout, to express the Society's views. The draft statutes, and other related papers, have been deposited in the Library of the Society. The Council are greatly indebted to Mr. Kendall for representing the Society on this important occasion.

CC-0. In Public Domain. Gurukul Kangri Collection, Haridwar

Digitized by Arya Samaj Foundation Chennai and eGangotri



*Finance*

The abstracts of the Honorary Treasurer's Accounts, viz., the Statement of Income and Expenditure for the year 1947 and the Balance Sheet as at 31st December, 1947, together with the report of the Auditor thereon are given in Appendices B and C.

Income other than Life Composition Fees showed a further increase, from £5,344 to £6,444, and included increases of £217 in Annual Fellowship subscriptions, of £522 in Sales of Journal and Reprints, and of £267 in Sales of Supplements. Examination Fees of £102 are included for the first time.

Expenditure showed a much greater increase, from £5,205 to £8,018. There were increases of £148 in Salaries and Wages, £116 in Expenses of Sections, £261 in Stationery and Miscellaneous Printing, £71 in Office Equipment, while Examination Expenses of £72 appeared for the first time, and £250 was spent in the representation of the Society at meetings of the International Statistical Institute in Washington, referred to in the previous Report of the Council.

The main increase in expenditure was, however, in the Publication and Distribution Expenses of the Journal and Reprints and of the Supplement, which rose from a total of £1,836 to £3,736 in 1947. The Journal and Reprints cost £2,034, as compared with £1,355 in the previous year. Journal sales to non-Fellows were, however, well maintained, and receipts rose from £1,711 to £2,233 (owing to the increase in the selling price from 40*s.* to 60*s.* per annum), so that there was only a small decrease in the profit on Journal sales, from £356 to £199.

In the case of the Supplement, the financial results were even more unsatisfactory than in previous years. Costs increased from £481 to £1,702, while receipts increased only from £177 to £444, so that the loss in Supplement Sales increased from £304 to £1,258. While it is recognized that the publication of the Supplement imposes a heavy financial burden on the Society, it is believed that this is fully justified by the need for such a publication at the present time.

The main reason for the increased cost of Publication and Distribution of Journal and Supplement was the repeated increases in the cost of printing and paper; these increases have continued into 1948. It should be noted, however, that in the case of the Supplement, three parts instead of two were issued in the year in order to bring it up-to-date, with the result that 1947 had to bear the cost of one part which in normal circumstances would have fallen on 1946.

The Council is actively considering how the heavy loss on the issue of the Supplement can be reduced, and has decided that as a first step the selling price must be increased from 30*s.* to 45*s.* per annum; but the position can only be rectified by increased sales, and various methods by which this object may be attained are being investigated. This may involve the reprinting of Volume II of the Supplement, which has long been out of print, but it is felt necessary to offer for sale complete sets of the Supplement.

The year's operations thus resulted in an Excess of Expenditure over Income of £1,573, as compared with a surplus of £139 in 1946.

Composition Fees fell from £1,041 to £735 and have fallen further in 1948, owing to the introduction of a more equitable scale of Fees, and at the end of 1947 the Life Composition Fee Fund, which was maintained at the total of the Composition Fees received from Fellows still living, amounted to £6,448. The Accumulated Fund of the Society was increased by the Composition Fees of Compounders who died during the year, and after deducting the deficit on the year's operations, £1,573, amounted to £6,186 at the end of the year.

CC-0. In Public Domain. Gurukul Kangri Collection, Haridwar

Digitized by Arya Samaj Foundation Chennai and eGangotri



## *The Council and Officers for Session* 1948/49

Acting under the Bye-laws the Council in December, 1947 and January, 1948 invited all Fellows to make suggestions for the composition of the Council for the Session 1948/49. Having taken into account the suggestions received it circulated its recommendations as set out below. As no alternative nominations have been received these Fellows will be announced at the Annual General Meeting on July 20th, 1948 as having been elected as the President, Officers and other members of Council for the session 1948–49.

The Council regrets to announce that owing to pressure of work Dr. C. Oswald George and Mr. M. G. Kendall were unable to offer themselves for re-election as Honorary Secretaries. On behalf of all Fellows, the Council acknowledges with sincere gratitude the work they have done for the Society and the contributions they have made to its steady development and progress in recent years. Dr. George and Mr. Kendall have agreed to serve on the Council in the coming year, and the Council will therefore continue to benefit by their knowledge and experience.

*President*

Dr. David Heron.

*Council*

R. G. D. Allen.
H. Campion.
D. G. Champernowne.
*Sir Henry Clay.
†W. Manning Dacey.
H. E. Daniels.
D. J. Desmond.
Iris Douglas.
*B. P. Dudding.
†E. C. Fieller.
D. J. Finney.
C. Oswald George.
R. F. George.
R. Glenday.
M. Greenwood.
†H. O. Hartley.
A. Bradford Hill.
J. O. Irwin.
W. J. Jennett.
J. H. Jones.
M. G. Kendall.
Philip Lyle.
Sir George Maddex.
E. S. Pearson.
H. L. Seal.
*Percy Stocks.
R. Stone.
*L. H. C. Tippett.
J. Wishart.
F. Yates.

*Honorary Treasurer*

J. H. Jones.

*Honorary Secretaries*

A. Bradford Hill. R. F. George. R. Stone.

*Honorary Foreign Secretary*

A. Bradford Hill.

On behalf of the Council,
D. Heron,
*President.*

A. Bradford Hill
C. Oswald George
M. G. Kendall
} *Honorary Secretaries.*

*June*, 1948.

Those marked * were not Members of Council during the preceding session, and those marked † have never previously served on the Council.

CC-0. In Public Domain. Gurukul Kangri Collection, Haridwar

Digitized by Arya Samaj Foundation Chennai and eGangotri



## APPENDIX A

From June, 1947 to May, 1948, inclusive, the candidates named below were elected Fellows of the Society:

Abrahams, Basil George.
Acton, John Woodwall, A.C.I.S.
Adams, Henry James, B.A.
Allinson, Vanessa Adele, B.A.
Anderson, Charles Dorrien, B.Sc.
Armitage, Peter, B.A.
Ashton, Winifred Doris, B.Sc.(Econ.).
Atkinson, Ivor William Maughan.

Badger, Edward Henry Michael, B.A., F.R.I.C.
Baker, Edwina Jean, B.Sc.
Bamford, Harold Firth, M.A., A.R.I.C.
Barker, John Darcy, B.A.
Barton, Michael Richard, B.A., M.A.
Bates, Leslie Robert.
Beacham, Robert Harold Sydney, B.Com., B.Sc.
Belz, Maurice Henry, B.Sc., M.Sc., M.A.
Benson, Frank, B.A.
Berkeley-Jones, Osborne, B.A.
Berman, Lawrence Sam, B.Sc.
Bishop, Harold Ernest, B.A.
Blackburn, Maurice Graham, M.A., B.Sc.(Econ.).
Blau, Emma, Dr. Phil.
Blow, Philip Benjamin, B.Sc.
Bond, Horace, B.A.
Borland, William Cunningham Wright, M.A., B.Com.
Bothwell, Alexander Markham, A.S.A.A.
Brand, Samuel, B.Com.
Brown, Geoffrey Frederick, A.C.I.S., A.C.W.A.
Brown, Marjorie Elizabeth, B.A.
Brown, John, M.A.

Cane, Violet Rosina, M.A.
Caplin, David Albert, B.Sc.(Econ.).
Cauter, Theodore, B.Sc.(Econ.).
Charles, Enid, M.A., Ph.D.
Chivers, George Colin, B.A.
Chopra, Vinay Kumar, M.A.
Clark, John Benjamin Leslie, A.C.A.
Clark, Peter George Montacue, B.Sc.
Clayton, Donald Scott, F.I.A.
Clayton, Squire, B.Com.
Collier, Philip Anthony, B.A.
Colman, Cubitt Wallace.
Cowlin, Geoffrey, B.Sc.(Econ.).
Crampton, Neville Keith.
Crosskill, Vera Lucille.

D'Abranyi, Melchior Charles Cornel Maria, B.A., B.Sc.(Econ.).
Daniell, Philip Allen, B.Sc.(Econ.).
David, Florence Nightingale, B.Sc., Ph.D.
Davie, Robert Moir.
Dean, Jack William Henry.
Dodd, Peter John Major.
Drummond, Joyce, B.Sc.
Dryden, John Aungle, B.Sc.
Ducker, Esmé, B.Sc.

Edge, Charles Geoffrey.
Eisenhart, Churchill, Ph.D.
England, John Frederick Thomas, M.A.
Evans, David Rhys, B.A.
Evans, Thomas Alan.

Farrington, Lawrence, B.Sc.
Faulkner, Harold.
Fearnley, Donald John.
Feldman, David, B.Sc.
Ferguson, Alexander, B.A.
Fletcher, William Bell.

Garstang, Roy Henry, B.A.
Georgiades, Lefkes P.
Ghosh, Arun Kumar, M.A.
Goldschmidt, Rudolf Wilhelm, B.Sc.(Econ.).
Green, Sidney.
Greenall, Philip Dalton, M.Sc.
Grenfeld, Arthur James, F.I.I.A.
Griffith, Lionel Edgar.
Griffith-Colpoys, Arthur Bertram.
Griffiths, Cecil.
Grosvenor, John Philip George, A.I.A.C., A.M.I.I.A.
Guy, John Henry.

Hales, Harold Bertram, B.Sc.(Econ.).
Halliday, Denis John, M.A., M.B.E.
Hamaker, Hugo Christian.
Handley, Cyril Monckton.
Hanton, Alastair Kydd, B.A.
Harrison, Woodthorp Jude, B.A.
Hart, Harry Rose.
Healy, Michael John Romer, B.A.
Henderson, Charles Shaw, M.A., B.Sc.(Econ.).
Herne, Howard James Louis, M.A.
Higgs, David Malcolm John, B.Sc.
Hodson, Edwin.
Hoffen, George Arthur.
Holding, Hubert Cecil, B.Sc., M.R.S.T.
Holliman, Eric Stanley, B.Com.
Hooker, Ronald George.
Hubback, Sir John Austen, M.A., K.C.S.I.
Hughes, Arthur Leslie.
Hughes, John Philip Wyndham, M.R.C.S., L.R.C.P., M.D., B.S., D.P.H.

Idaikkadar, Nagamuttu Manicka, M.A., B.Sc.
Ingham, Herbert.
Innerarity, Rita Olivine.
Iyer, P. V. K., M.A.

Jain, Shital Prasad, M.Sc., A.I.A.
Jamieson, Roy.
Jarvis, Charles Henry Ranger.
Jenkins, Catherine Margaret, B.A.
Johnson, Keith Meredith.
Johnson, Vernon Peter, B.Sc.(Econ.).
De Jong, Adriaan Johannes.

Kadesh, Margaret Josephine, B.Sc.(Econ.).
Karmel, Peter Henry, B.A.
Kerrich, J. E., M.Sc.
King, Albert Leslie.
Kinsella, Joan Mary.
Kinsman, Kenneth Lewis, B.A., B.Sc.(Econ.).
Kirby, Arthur Kenneth.
Komlosy, Graham Frederick, B.Sc., A.R.C.S.

CC-0. In Public Domain. Gurukul Kangri Collection, Haridwar

Digitized by Arya Samaj Foundation Chennai and eGangotri



Lacroix, Max.
Lancaster, Henry Oliver, M.B., B.S.
Lane, Ralph Charles Bradley, M.A., B.Sc., F.I.A.
Lax, Charles Burt.
Leigh-Dugmore, Charles Henry.
Leyshon, Selma Elizabeth, B.Com., B.Sc.
Liddell, Francis Douglas Kelly, B.A.
Lindley, Dennis Victor, B.A.
Little, William.
Lloyd-Jones, Herbert, Lt., R.N.
Lockyer, Ivo Joseph, B.Sc.
Longley-Cook, Hilary St. Vincent, F.C.I.S.
Lunt, Thomas Joseph, B.Sc.

Macbeth, Charles Edward.
McDonough, George Harold.
MacIntyre, Donald.
McMorran, Angus Baker, B.A.
Mactaggart, Ian Auld.
Majumdar, Nilratan, B.Sc.
Maltby, Mary, B.Sc.(Econ.).
Mark, Mary Louise, B.A.
Marsh, Stanley Howard.
Mather, James Williamson, F.C.C.S.
Michaels, Isaac, Ph.D., B.Sc., A.R.I.C.
Montacute, Charles.
de Montagu, Enrico, Professor.
Mukherjee, Ramkrishna, M.Sc.
Mullings, Diana Elizabeth Tudway, B.Sc.(Econ.).

Nadin, Maurice, B.A.
Nath, Pran, M.Sc.
Nathan, Arthur Stanley, A.I.A.
Neech, Frank Donald, B.Sc., A.R.C.S., A.R.I.C.
Nevard, Betty Rona.
Newby, Ronald Frank, B.Sc.
Newton, Ronald Gordon, Ph.D., D.I.C.
Norden, Monroe L.

Oldham, Peter David, M.A.
Organ, Arthur Maitland.

Palmer, William Theophilus.
Parker, John Burden, B.A.
Penman, Sidney Alan, B.A.Com.
Pickard, Robert Enoch, B.Sc.(Econ.).
Pickersgill, Barbara Annette.
Power, Justin McCarthy, B.A.
Prior, Stephen Edward, B.Sc.(Econ.).
Pritchard, Arthur Alan.
Pritchard, John William Thomas.
Purdon, Peter Edwin.

Ratcliff, Eric William Napier.
Redfern, Philip, B.A.
Richards, Dennis Leslie, B.Sc., A.M.I.E.E.
Rifkin, Harold, B.A.
Rigby, Marianne June, M.A.
Rix, Margaret Shelly, M.Sc.(Econ.).
Rowe, David John Michel, B.Sc., A.R.I.C.
Ruben, Harold, B.Sc., A.R.C.S.
Rushton, Stanley, M.A., B.Sc.

Said, Gamal El-Dine Mohamed Ahmed, B.Sc., M.Com., Ph.D.
Saksena, Gajraj Bahadur, M.Sc.
Sandelius, David Martin.
Sapsford, Alfred, B.Sc.(Econ.).
Shaw, Albert Eric.
Shell, Edgar Lewis.
Shread, Clement.
Silcock, Harold, M.A.
Sillitto, George Percy, B.Sc., Ph.D.
Skinner, John Cecil, M.A.
Smith, Harold Dunage.
Spencer, Rudy G., B.Sc.(Econ.).
Squirrell, Norman John, B.Com.
Stafford, Jack, M.A.
Stanley, Philip John, B.A.
Stewart, John M.
Stirling, Archibald, B.Sc.
Street, Reginald Owen, M.A., M.Sc.
Su, Teh-Long, M.B., M.P.H., D.Phil.
Sukhatme, A. V., M.Sc., Ph.D.
Swann, Bernard Burrows, B.Sc., B.Com.

Taylor, Alec, B.A.
Taylor, David Ronald.
Thirkettle, George Leslie, B.Com., A.C.I.S.
Thom, Jean Marian Susan.
Thomas, Clifford John.
Thompson, Cecil Harry, M.Com.
Thorn, William Charles.
Thornton-Bryar, W. E.
Thrift, Herbert John, B.Sc.(Econ.).
Tintner, Gerhard.
Tuck, Ronald Humphrey, M.A.

Uchytil, Jan.
Ungerson, Bernard, Lt.-Col.
Unwin, Ronald James Arthur, F.I.A.

Vaswani, Sundri, M.Sc.

Wadsworth, John, A.I.M.T.A.
Wagland, Gordon James.
Walker, Huntly Gordon, F.I.A.
Wardrop, John Glen, B.A.
Waugh, George, F.F.A., A.I.A.
Westley, Richard Walter.
Whelpton, Pascal Kidder, B.S.
Whitehead, Albert Eric.
Whitehead, William, M.A., F.F.A.
Whitehouse, Arnold Martyn.
Whiting, Stephen, A.C.I.S.
Williams, Betty Ruth, B.A.
Williams, Robert Horlick, B.A.
Williams, Richard Owen, M.A.
Williams, Tom Iredale, M.A.
Willis, Frank Henry.
Wilson, Frank Philip.
Wiltshire, Joseph Thomas, Major, R.E.M.E.
Wold, Herman Ole Andreas, Professor.
Wolf, Renée Eugénie, B.Sc.(Econ.).
Wormal, W. G., Lt.-Col., B.A.
Worsdale, William John.
Wright, Edward Gordon.
Wright, Reginald Kenneth, B.A., B.Sc.

Yeatts, Maurice William Walter Murray, M.A., C.S.I., C.I.E.
Young, George Frederick Mortimer, A.M.I.E.I



CC-0. In Public Domain. Gurukul Kangri Collection, Haridwar

Digitized by Arya Samaj Foundation Chennai and eGangotri



*Corporate Representatives*

| | |
|---|---|
| Austin, G. H., B.A., Ph.D., | *representing* Leeds College of Commerce. |
| Burke, Rosemary, | *representing* Research Services, Ltd. |
| Ferraby, John Graham, | *representing* British Export Trade Research Organization. |
| Filson, Alexander, | *representing* The Fabian Society. |
| Ford, Cecil Vernon, | *representing* The Society of Motor Manufacturers and Traders, Ltd. |
| Goodman, Raymond John, | *representing* PEP (Political and Economic Planning) Trust. |
| Hall, Charles George Athelstan, | *representing* Philips Electrical, Ltd. |
| Innes, Sir Peter, C.B.E., M.A., D.Sc., | *representing* The National Foundation for Educational Research. |
| Jamieson, William, | *representing* Anglo-Iranian Oil Company, Ltd. |
| McColvin, Lionel R., | *representing* The City of Westminster Public Libraries. |
| Rhys-Williams, Lady, D.B.E., | *representing* The Joint Council for Monetary and Economic Research. |
| Robins, Hilda M., B.A., | *representing* Hulton Press, Ltd. |
| Silver, Pauline, | *representing* The Council of Industrial Design. |
| Steiner, Eric Hubert, B.Sc., | *representing* British Food Manufacturing Industries Research Association. |
| Wilson, David Robertson, M.A., | *representing* The International Wool Secretariat. |

CC-0. In Public Domain. Gurukul Kangri Collection, Haridwar

Digitized by Arya Samaj Foundation Chennai and eGangotri

CC-0. In Public Domain. Gurukul Kangri Collection, Haridwar

Digitized by Arya Samaj Foundation Chennai and eGangotri



## STATEMENT OF INCOME AND EXPENDITURE

### EXPENDITURE.

| 1946. £ s. d. | £ s. d. | | 1947. £ s. d. | £ s. d. |
|---|---|---|---|---|
| | 380 0 0 | Rent | | 380 0 0 |
| | 304 8 1 | House Expenses | | 317 10 11 |
| | 1,284 8 2 | Salaries and Wages (including contribution to Staff Superannuation Scheme) | | 1,432 1 3 |
| | 239 0 0 | Pension and Allowance | | 239 0 0 |
| | 198 4 2 | Meetings—Ordinary and General | | 185 17 2 |
| | | Expenses of Sections:— | | |
| 57 12 1 | | Research | 63 3 10 | |
| 148 10 2 | | Industrial Applications | 228 11 4 | |
| 13 3 7 | | Study | 43 16 5 | |
| | 219 5 10 | | | 335 11 7 |
| | | Publication and Distribution Expenses:— | | |
| 1,354 19 2 | | Journal and Reprints | 2,033 14 0 | |
| 480 14 3 | | Supplement | 1,701 16 10 | |
| | 1,835 13 5 | | | 3,735 10 10 |
| | | Library:— | | |
| 90 11 11 | | Books | 109 10 8 | |
| 14 18 0 | | Binding | 49 11 2 | |
| | 105 9 11 | | | 159 1 10 |
| | 23 6 4 | Insurance | | 14 12 8 |
| | 291 5 9 | Stationery and Miscellaneous Printing | | 552 11 7 |
| | 121 8 1 | Postage and Telephone | | 127 15 11 |
| | 36 3 4 | Guy Medals | | — — — |
| | 21 18 5 | Miscellaneous Items | | 19 16 1 |
| | 36 15 0 | Auditor's Fee [1946] | | 36 15 0 |
| | — — — | Council and Committee Travelling Expenses | | 41 17 4 |
| | — — — | Expenses of Society's representative attending meetings of International Statistical Institute in U.S.A. | | 250 0 0 |
| | 46 4 8 | Office Equipment | | 117 4 7 |
| | 61 8 0 | Legal Expenses | | — — — |
| | | Examination Expenses:— | | |
| | — — — | Printing, Stationery and Postage | 40 17 0 | |
| | — — — | Examiners' Fees | 31 10 0 | |
| | | | | 72 7 0 |
| | 5,204 19 2 | | | 8,017 13 9 |
| | 138 19 9 | Balance carried to Accumulated Fund: Excess of Income over Expenditure for the year 1946 | | — — — |
| | 5,343 18 11 | | | 8,017 13 9 |
| | 1,040 11 0 | Amount carried to Life Composition Fee Fund | | 735 0 6 |
| | £6,384 9 11 | | | £8,752 14 3 |

CC-0.In Public Domain. Gurukul Kangri Collection, Haridwar

Digitized by Arya Samaj Foundation Chennai and eGangotri

DIX B

FOR THE YEAR ENDED 31ST DECEMBER, 1947

## INCOME.

| 1946. £ s. d. | 1946. £ s. d. | | 1947. £ s. d. | 1947. £ s. d. |
|---|---|---|---|---|
| | | Annual Subscriptions:— | | |
| 2,705 17 0 | | Fellowship .. .. .. .. .. | 2,922 13 0 | |
| 1 10 0 | | Research Section .. .. .. .. | 10 0 | |
| 151 10 6 | | Industrial Applications Section .. .. | 114 1 6 | |
| — — — | | Study Section .. .. .. .. | 1 10 0 | |
| | 2,858 17 6 | | | 3,038 14 6 |
| | 1,710 13 10 | Sales of Journal and Reprints .. .. | | 2,232 18 9 |
| | 177 2 6 | Sales of Supplement .. .. .. | | 444 2 10 |
| | 13 9 | Sales of other Publications .. .. | | 1 13 2 |
| | 50 0 0 | Contribution from Royal Economic Society | | 50 0 0 |
| | 540 11 7 | Dividends and Interest (gross) .. .. | | 564 19 1 |
| | 3 13 6 | Special Donations .. .. .. .. | | 10 0 0 |
| | — — — | Examination Fees .. .. .. .. | | 102 0 0 |
| | 2 6 3 | Miscellaneous Receipts .. .. .. | | — — — |
| | 5,343 18 11 | | | 6,444 8 4 |
| | — — — | Balance carried to Accumulated Fund: Excess of Expenditure over Income for the year 1947 .. .. .. .. | | 1,573 5 5 |
| | 5,343 18 11 | | | 8,017 13 9 |
| | 1,040 11 0 | Life Composition Fees .. .. .. | | 735 0 6 |
| | 6,384 9 11 | | | £8,752 14 3 |

CC-0. In Public Domain. Gurukul Kangri Collection, Haridwar

Digitized by Arya Samaj Foundation Chennai and eGangotri



BALANCE SHEET AT

| 1946. £ s. d. | £ s. d. | LIABILITIES. | £ s. d. | £ s. d. | 1947. £ s. d. |
|---|---|---|---|---|---|
| | | Annual Subscriptions received in advance:— | | | |
| 124 19 0 | | Fellowship .. .. .. .. .. | 355 15 9 | | |
| — — — | | Industrial Applications Section .. .. | 4 10 0 | | |
| 10 0 | | Study Section .. .. .. .. | — — — | | |
| | 125 9 0 | | | | 360 5 9 |
| | 915 2 1 | Payments for Journal and Supplement received in advance .. .. .. | | | 869 9 4 |
| | 733 1 10 | Sundry Creditors .. .. .. .. | | | 2,146 19 9 |
| | | Life Composition Fee Fund:— | | | |
| 3,669 15 0 | | Balance at December 31st, 1946 .. | 5,818 1 0 | | |
| 1,040 11 0 | | *Add:* Life Composition Fees received in 1947 .. .. .. .. .. | 735 0 6 | | |
| 1,107 15 0 | | Amount transferred from Accumulated Fund .. .. .. .. .. | — — — | | |
| 5,818 1 0 | | | 6,553 1 6 | | |
| | | *Less:* Contributions of Compounders who died or resigned during 1947 transferred to Accumulated Fund .. .. | 105 0 0 | | |
| — — — | 5,818 1 0 | | | | 6,448 1 6 |
| | | Accumulated Fund of the Society:— | | | |
| 8,257 0 7 | | Balance at December 31st, 1946, per last Accounts .. .. .. .. | 7,654 6 9 | | |
| — — — | | *Add:* Amount transferred from Life Composition Fee Fund .. .. | 105 0 0 | | |
| 138 19 9 | | Excess of Income over Expenditure for the year 1946 .. .. | — — — | | |
| 366 1 5 | | Profit on realization of Investment .. | — — — | | |
| 8,762 1 9 | | | 7,759 6 9 | | |
| | | *Less:* Excess of Expenditure over Income for the year 1947 per annexed Statement .. .. .. .. .. | 1,573 5 5 | | |
| — — — | | Amount transferred to Life Composition Fee Fund .. .. | — — — | | |
| 1,107 15 0 | 7,654 6 9 | | | | 6,186 1 4 |
| | 15,246 0 8 | | | | 16,010 17 8 |
| | | *Building Fund* (per contra):— | | | |
| 1,107 9 6 | | Balance at December 31st, 1946 .. | 1,149 6 1 | | |
| 41 16 7 | | *Add:* Income for year 1947 .. .. | 43 3 0 | | |
| | 1,149 6 1 | | | | 1,192 9 1 |
| | | *Frances Wood Memorial Fund* (per contra):— | | | |
| 511 16 8 | | Balance at December 31st, 1946 .. | 541 16 1 | | |
| 29 19 5 | | *Add:* Income for year 1947 .. .. | 29 15 10 | | |
| 541 16 1 | | | 571 11 11 | | |
| — — — | | *Less:* Prizes awarded in 1947 .. .. | 60 0 0 | | |
| | 541 16 1 | | | | 511 11 11 |
| | £16,937 2 10 | | | | £17,714 18 8 |

*Note.*—No value is placed in the Accounts on (1) Journals and other Publications in stock, (2) Books in Library, and (3) Pictures, Furniture and Equipment.

CC-0. In Public Domain. Gurukul Kangri Collection, Haridwar

Digitized by Arya Samaj Foundation Chennai and eGangotri

DIX C

31ST DECEMBER, 1947

| 1946. £ s. d. | £ s. d. | ASSETS. | £ s. d. | £ s. d. | 1947. £ s. d. |
|---|---|---|---|---|---|
| | | Investments at cost or under:— | | | |
| 5,580 0 0 | | £10,527 12*s.* 3*d.* 2½% Consols (Guy Bequest) .. .. .. .. .. | 5,580 0 0 | | |
| 1,185 0 0 | | £2,236 11*s.* 3*d.* 2½% Consols .. .. | 1,185 0 0 | | |
| 1,324 0 0 | | £1,864 14*s.* 1*d.* 3½% Conversion Loan .. | 1,324 0 0 | | |
| 490 0 0 | | £500 3½% War Loan .. .. .. | 490 0 0 | | |
| 2,000 0 0 | | £2,000 3% Savings Bonds, 1965–75 .. | 2,000 0 0 | | |
| 2,000 0 0 | | £2,000 3% Defence Bonds .. .. | 2,000 0 0 | | |
| | | £666 4% 2nd Prefd. Stock, London and North-Eastern Railway .. .. | 100 0 0 | | |
| 100 0 0 | | | | | |
| | 12,679 0 0 | | | 12,679 0 0 | |
| | | (Market value, December 31st, 1947, less Interest accrued, £17,102) | | | |
| | 141 6 7 | Interest accrued on Investments (gross) .. | | 141 6 7 | |
| | 1,912 4 3 | Cash at Banks and in hand .. .. | | 2,641 7 3 | |
| | | Arrears of Subscriptions recoverable (estimated) .. .. .. .. .. | | 84 0 0 | |
| | 84 0 0 | | | | |
| | 429 9 10 | Sundry Debtors and amounts paid in advance | | 465 3 10 | |
| | 15,246 0 8 | | | 16,010 17 8 | |
| | | *Building Fund:*— | | | |
| | | £1,263 4*s.* 4*d.* 3½% Conversion Loan (Market value, December 31st, 1947, £1,333) .. .. .. .. .. | | 1,192 9 1 | |
| | 1,149 6 1 | | | | |
| | | *Frances Wood Memorial Fund:*— | | | |
| | | £600 4% Preference Stock, London, Midland and Scottish Railway .. .. | 300 0 0 | | |
| 300 0 0 | | (Market value, December 31st, 1947, £495) | | | |
| 229 16 1 | | Post Office Savings Bank Deposit .. | 188 15 11 | | |
| 12 0 0 | | Income Tax Refund due .. .. .. | 22 16 0 | | |
| | 541 16 1 | | | 511 11 11 | |
| | £16,937 2 10 | | | £17,714 18 8 | |

## REPORT OF THE AUDITOR.

I have examined the foregoing Statement of Income and Expenditure and Balance Sheet with the Books and Records of the Society. I have verified the Investments and Cash appearing in the Balance Sheet. I report that the above Balance Sheet is, in my opinion, properly drawn up so as to exhibit a true and correct view of the state of the affairs of the Society, according to the best of my information and the explanations given to me, and as shown by the Books and Records.

A. RAE SMITH, *Chartered Accountant*, Auditor.

*14th May*, 1948.

CC-0. In Public Domain. Gurukul Kangri Collection, Haridwar

Digitized by Arya Samaj Foundation Chennai and eGangotri



PROCEEDINGS OF THE ONE HUNDRED AND FOURTEENTH ANNUAL GENERAL MEETING OF THE ROYAL STATISTICAL SOCIETY, HELD AT THE LONDON SCHOOL OF HYGIENE AND TROPICAL MEDICINE ON TUESDAY, JULY 20TH, 1948.

The Chair was taken by the PRESIDENT, Dr. DAVID HERON.

The PRESIDENT announced that as no alternative nominations had been received, the President, Council and Officers for the session 1948–49, nominated as shown on the list already circulated, were duly elected.

On the proposal of the HONORARY TREASURER, Professor J. H. Jones, Sir Alan Rae Smith was unanimously re-elected Auditor of the Society for the session 1948–49 at a fee of thirty-five guineas.

The PRESIDENT presented the Report of the Council for the financial year 1947 and the session 1947–48, drawing attention to items of special interest.

During his submission of the Report the PRESIDENT announced the award of the Society's Certificate to the successful candidates in the 1947 Certificate examination, and presented the Certificates to those candidates who were able to be present at the meeting.

The PRESIDENT moved the adoption of the Report.

The HONORARY TREASURER presented the accounts, and seconded the motion for the adoption of the Report.

After discussion, in which the speakers were Mr. F. J. Anscombe, Professor Bradford Hill, Mr. W. J. Williamson, Mr. A. J. Thayre, Mr. G. R. White, Mr. J. R. Cleminson and Dr. B. P. Dudding, the Report was unanimously adopted.

The Meeting then terminated.

CC-0. In Public Domain. Gurukul Kangri Collection, Haridwar

Digitized by Arya Samaj Foundation Chennai and eGangotri



# PROCEEDINGS OF SECTIONS

## Industrial Applications Section

### Proceedings of the London Group

Twenty-fifth Ordinary Meeting, February 4th, 1949. Subject: "A Statistician Looks at the Mechanical Transport Section." Principal Speaker, Mr. W. R. Buckland; Chairman, Mr. D. Newman; Attendance, 38.

Mr. Buckland said that though the need for statistical consideration of transport data had always existed, it had been accentuated by the changed supply position during and since the war. Both planned experiments and studies of routine data were regularly carried out, and a number of examples were given.

To compare the effects of different pressures in a fuel inspection system 12 buses were run on the same route with a 150 atmospheres pressure for one week, and at 100 atmospheres for a second week. Both single- and double-tailed $t$-tests were used to test the average difference in gallons of fuel per mile for the two pressures.

Since the introduction of a thermostat was expected to improve fuel consumption a single-tailed $t$-test was used to test the difference between average consumption with and without thermostats. A practical consideration perhaps outweighing the statistical significance was that engines tended to freeze up when a thermostat is used.

Normally some hundred types of mechanical and electrical failures in service were logged, and their analysis required modern time series techniques. Significant trends then stimulated special technical enquiries.

An enquiry into the effect of tyre type and age on fuel consumption was arranged in a Graeco-Latin square form because it was advisable to involve only a small number of vehicles, which could then be closely controlled over the same route with the same conditions.

Miss Keen and Messrs. Hartley, Kitchen, Newman, Pearce, Read, van Rest, Stiles, Swan and White took part in the discussion, which dealt largely with experimental and statistical detail. It was stressed that, since records were usually kept but never adequately analysed, even small transport companies should use statistical methods, even if, as units, they could not individually afford to employ statisticians.

Mr. Newman proposed a vote of thanks.

Twenty-sixth Ordinary Meeting, March 4th, 1949. Subject: "Statistical Methods in the Interpretation of Experimental Results." Principal Speaker, Mr. G. E. P. Box; Chairman, Mr. D. Newman; Attendance, 140.

This meeting was held in conjunction with the London Section of the Society of Chemical Industry. In his address Mr. G. E. P. Box, of Imperial Chemical Industries, Ltd., suggested that the reason for starting to use statistical methods in an industry which had flourished without it for some three hundred years was that the methods enabled quantitative estimates to be given to common-sense decisions. For instance, a man, in choosing one of several routes to a certain place, is liable to make two kinds of error, that of not changing to the best, and that of changing to the worst, and some estimate was needed of the risk and expenditure involved in each choice.

Thus, in a process giving an average quality index of 85 with a standard deviation of 2, we should know the risk involved in changing to another process which appeared to give an average of 87; for a 5 per cent. risk of admitting an improvement which had not really occurred, and a 1 per cent. risk of not admitting it if it had occurred, Mr. Box gave the following formula for the number of replications which would be necessary, using the single-tail $t$-test:

$$\frac{\sigma(t_{0\cdot05} + t_{0\cdot01})}{\sqrt{n}} = 87-85$$

that is,

$$\frac{2(1\cdot65 + 2\cdot33)}{2} = \sqrt{n}, \text{ or } n = 16.$$

He also mentioned a modification of the method, by which test results were accumulated so that tests could be discontinued as soon as a statistically significant result had been reached, rather than a fixed number made before considering their significance.

CC-0. In Public Domain. Gurukul Kangri Collection, Haridwar

Digitized by Arya Samaj Foundation Chennai and eGangotri



This led to a consideration of the superiority of statistical tests over other criteria, which lay in their being designed to make the fewest mistakes of either of the kinds already mentioned.

Mr. Box concluded with a plea to chemists to make use of the statistician for designing their experiments, rather than to ask his aid after a badly designed experiment had been completed. Chemical observations were often costly to collect, and it was therefore imperative to get the maximum amount of information from the fewest possible results.

Messrs. Badger, Baldwin, Marlow, Phillips, Richmond, Sears, Soper, Tate, Wood and Wyatt joined in the discussion. Mr. Box dealt with the following points which were raised:

The probability level to be used in assessing data was somewhat arbitrary and depended on the action to be taken, rather as insurance premiums depended on the likely risk. Assessments could, however, be made on a consistent basis, enabling comparisons to be made between different sorts of test, and avoiding the dependence on "hunches," the subjective bases of which changed from day to day.

Mr. Soper maintained that in any case we were not interested in single experiment, and that statistics, in conjunction with other knowledge, put reliable limits on prophecies. In making the prophecy it was not the understanding of the basis of the methods that mattered, but the knowledge of how to use them.

Mr. Wood felt that many chemists did not use statistical tests because it was "too much bother to make the calculations." His own experience suggested that time was ultimately saved by making them, and that more information was gained by basing conclusions on all previous data rather than on the last results. Intuition was, after all, wisdom based on past observation.

Mr. Box thought one did not need to know how the separate parts of a process contributed to the final variability in order to use the final result as a criterion, but that experiments could be designed to assess the separate contributions and thereby, perhaps, to reduce the final variability. He gave information on statistical techniques which can be found in modern text-books.

Dr. Baines, the Chairman of the London Section of the S.C.I., in proposing the vote of thanks, said that though statistics was virtually unknown in the chemical industry before the war, large numbers of chemists now used it, and it was no longer felt that "the greatest error in analysis was the application of statistics." He thanked Mr. Box for having stimulated such a useful discussion.

TWENTY-SEVENTH ORDINARY MEETING, MARCH 17TH, 1949. Subject: "The Use of Statistical Methods in the Study of Road Materials." Principal Speaker, Dr. F. Garwood; Attendance, 30.

The meeting was held in conjunction with the Society of Chemical Industry and arranged by them.

Dr. Garwood outlined in considerable detail three separate problems dealt with by the Road Research Laboratory.

The first concerned the development of a test for assessing the roundness of aggregate, the experiment involving four operators, two types of aggregate, and three methods of filling. Components of variability were obtained by Analysis of Variance.

The second involved the analysis of road life since 1933 to determine the best surface dressing Since the distributions were very skew, the square root of life was used to make comparisons. There was no significant difference between tar and bitumen dressings, but tar surfaces did not stand up to heavy traffic as well as bitumen.

The third problem dealt with the strength of concrete, and variations amongst the specimens due to operators, storage conditions, day to day, and within day differences, were apportioned. Both cement batch and storage temperature affected the strength.

The vote of thanks was proposed by Mr. van Rest.

## PROCEEDINGS OF THE TEES-SIDE SUB-GROUP

THIRTEENTH ORDINARY MEETING, OCTOBER 14TH, 1948. Subject: "Sampling and Analysis of a Product in Bags." Principal Speaker, Mr. J. T. Richardson; Chairman, Mr. H. Kenney; Attendance, 18.

Mr. Richardson described an experiment which had been performed to investigate the various sources of error affecting analyses of a particular fertilizer after the product had been bagged. The experiment had been designed to enable the separation of analytical error, sampling errors and variations in the true composition of the product. All sampling was done in duplicate, and samples had been compounded from different numbers of bags. Sampling was spread over a

CC-0. In Public Domain. Gurukul Kangri Collection, Haridwar

Digitized by Arya Samaj Foundation Chennai and eGangotri



number of weeks. All samples were analysed twice, once in each of two laboratories. Reasons for adopting the particular design were given in detail, and the method of treatment of the results was outlined. It was found that the most important source of variation was in the composition of the product. A peculiar and interesting feature was that it had been possible to show that the analytical error in one laboratory was significantly lower than that in the other laboratory.

The discussion which followed mainly concerned the comparison of the two laboratories. Criticism was made of the fact that some of the data had been rounded off while the remainder had not.

FOURTEENTH ORDINARY MEETING, NOVEMBER 16TH, 1948. Subject: "Incentives and the Young Worker." Principal Speaker, Mr. L. T. Wilkins; Chairman, Mr. H. Kenney; Attendance, 13.

The speaker described a field survey in which 300 men aged 18–19 years had been asked to rank eight "incentives," and also to express their attitudes to the same items by means of paired comparisons. The data obtained in this way were then examined by using various statistical techniques. The results of ranking were first subjected to factorial analysis, when it was found that the eight items divided readily into two groups of four. Examination of the correlations of ranking showed that pay was not the only incentive to be considered. Correlation with the results of intelligence tests showed that definite differences of opinion existed between the higher and lower intelligence groups as to what were the most important incentives. Higher intelligence groups were inclined to be more interested in the type of work than in the compensations to be obtained. Other conclusions formed were: (1) it is difficult to get true answers to questions on financial incentives; (2) it is possible that certain schemes work in some places and not in others, because the fundamental principles underlying the schemes are not fully understood. The speaker claimed, however, to have done little more than suggest lines for further work.

From the discussion which followed it appeared that the speakers' findings were in general agreement with experience in works. Some speakers mentioned other factors which affected the attitude of the worker to his job.

FIFTEENTH ORDINARY MEETING, DECEMBER 9TH, 1948. Subject: "Making Decisions from Numerical Data." Principal Speaker, Mr. G. E. P. Box; Chairman, Mr. T. C. Robinson; Attendance, 17.

Starting with the simple example of making a choice between two bus routes, Mr. Box developed the idea that weighing the relative merits of alternative hypotheses, whether conscious or subconscious, was a common phenomenon. He then drew the parallel between making decisions of this type and making decisions about numerical data, where the quantitative basis was more readily understood. He described the two types of error which might be made—that of accepting a false hypothesis and that of rejecting a true one—and showed how when dealing with numerical data, by fixing the probabilities of these errors occurring, the minimum size of sample required for a decision was also fixed.

He then explained, in rather less detail, the basis of the sequential method and how this operated.

In the discussion which followed Mr. Bosanquet questioned the general superiority of the arithmetic mean over the median—a view which was supported by Mr. Goggs when he proposed the vote of thanks. Great interest was expressed, and a number of questions were asked about the sequential methods.

SIXTEENTH ORDINARY MEETING, JANUARY 11TH, 1949. Subject: "Elementary Regression Analysis." Principal Speaker, Mr. W. T. Hale; Chairman, Mr. H. Kenney; Attendance, 17.

In his opening remarks the Chairman stated that the subjects for this meeting and the meeting planned for April were complementary, as the talk on Elementary Regression Analysis was intended to give the general statistical background of the techniques to be described at the later meeting.

As an introduction to his subject Mr. Hale mentioned the circumstances in which the term regression was given the meaning it now has. Using Galton's own example of fathers and sons

CC-0. In Public Domain. Gurukul Kangri Collection, Haridwar

Digitized by Arya Samaj Foundation Chennai and eGangotri



he showed how different regression lines were used, depending on which variable was taken to be the dependent variable. Using a simple example for illustration he showed how an estimated regression line might be considered an improvement on a simple rate, since the best relationship did not necessarily give a line passing through the origin. He then explained how the total variation of the dependent variable could be divided into two parts—that due to the regression line, and that due to scatter about the regression line—and explained that as the scatter of the points about the line decreased, so the reliability of a forecast from the estimated relation improved.

SEVENTEENTH ORDINARY MEETING, FEBRUARY 17TH, 1949. Subject: "Probability and the Experimenter." Principal Speaker, Mr. E. D. van Rest; Chairman, Dr. G. I. Higson; Attendance, 9.

This paper was given at a meeting of the London Group and has already been fully reported.

CC-0. In Public Domain. Gurukul Kangri Collection, Haridwar

Digitized by Arya Samaj Foundation Chennai and eGangotri



# REVIEWS OF STATISTICAL AND ECONOMIC BOOKS

## CONTENTS


| | PAGE |
|---|---|
| 1.—*Hald* (*A.*). Statistiske Metoder | 369 |
| 2.—*Meade* (*James Edward*). Planning and the Price Mechanism. The Liberal-Socialist Solution | 370 |
| 3.—*Jacoby* (*N. H.*) and *Saulnier* (*R. J.*). Business Finance and Banking | 371 |
| 4.—*Balogh* (*T.*).—Studies in Financial Organizations | 371 |
| 5.—*Rangnekar* (*S. B.*). Imperfect Competition in International Trade | 372 |
| 6.—*Collins* (*Arthur*). Municipal Internal Audits | 372 |
| 7.—Other New Publications | 373 |


1.—*Statistiske Metoder*. By A. Hald. Copenhagen: Det Private Ingeniørfond, 1948. $6\frac{3}{4}'' \times 10''$. 654 pp.

Bonnier and Tedin's *Biologisk Variationsanalys* might be regarded as the "Mather" or the "Snedecor" of Scandinavian statistical literature, and, despite its merits, we need not grudge its publication in an unfamiliar language. Dr. Hald, who has recently been appointed Professor of Statistics in the University of Copenhagen, has produced a book for which there is no close equivalent in English. Though not seeking the rigour of Cramér, he does not hesitate to give fairly full mathematical proofs of distributions and their properties, at a standard perhaps about that of Weatherburn. At the same time, by permitting himself a long book, he is able to include a wealth of practical examples; these are not merely arithmetical exercises on the theory, but are penetrating discussions of problems in applied statistics (especially in industry) of which the author has obviously had personal experience. Moreover, the clarity of presentation, aided by a standard of type-setting and spacing that must arouse the envy of the austerely published English author, is such that, in spite of my very slight knowledge of Danish, I have found little difficulty in comprehending and being interested by all portions that I have yet examined.

The titles of the 23 chapters—Definitions, Graphical Presentation, Normal Distribution, Distribution of a Mean, $\chi^2$, $t$, Analysis of Variance, Linear Regression, Binomial and Poisson Distributions, Sequential Analysis, amongst others—suggest a text-book of conventional type. Closer examination shows that, though all the basic results are given, there is much in addition. For example, the chapter on the normal distribution contains sections on truncated distributions and on mixtures of two distributions, problems not yet completely solved and on which most books fail to give any guidance. Supplied with the book is a separate volume of statistical tables. Most of the tables are of functions already available in Fisher and Yates's collection or elsewhere; Hald, however, gives many additional values in his $\chi^2$ and various ratio tables, unfortunately without indicating how these have been obtained.

It is surprising that Hotelling's $T^2$ should find a place without even a reference to subsequent work on discriminant functions, a technique that might be expected to find application in problems with which Professor Hald has been concerned. The discussion of experimental design is by no means full enough for a statistician who is in other respects equipped to the standard of this book, but perhaps so extensive a subject can receive the attention it deserves only in a separate publication. One or two chapters on sampling and the elements of the theory of statistical estimation would add greatly to the value of the book. To criticize an author for not having made an already long work still longer, however, is scarcely fair. In respect of details, one flaw seems to be the practice of pooling non-significant degrees of freedom in an analysis of variance with those for error, a procedure that may sometimes be useful and justifiable, but, if used uncritically, may lead to seriously biased tests of significance and estimation. The translation of both fiducial limit and confidence limit by "Sikkerhedsgraense" seems liable to cause confusion, at least so long as present controversies on inductive inference persist.

That Professor Hald has chosen to publish in Danish is proof of the growing interest in statistical science in Scandinavia. I have little doubt that an edition in English would go far towards meeting the need for a book suitable for the young mathematician who proposes to take up work in applied statistics.

D. J. F.

CC-0. In Public Domain. Gurukul Kangri Collection, Haridwar

Digitized by Arya Samaj Foundation Chennai and eGangotri



2.—*Planning and the Price Mechanism: The Liberal-Socialist Solution.* By James Edward Meade. London: Allen and Unwin, Ltd., 1948. 7¼″. xiv + 130 pp. 8*s.* 6*d.*

It is the aim of this book to demonstrate that all, or nearly all, social objectives can best be achieved by the use of the price mechanism and not by quantitative regulations or controls, provided that all inequalities, whether of income or otherwise, have been reduced, and some monopolies socialized. Any form of quantitative planning is condemned as wasteful, corrupt and clumsy. Even though it may appear in places that rare exceptions are admitted, these are against the grain of the whole argument. Deflation and inflation should be controlled by making considerable use of the rate of interest (Chapter 1). Food subsidies are condemned as conducive to waste, though rationing is hardly mentioned. Monopoly is to be obstructed (Chapter IV). The hard core of the monopoly problem will remain where, as the author puts it clearly, "the technically efficient scale of production does remain obstinately large in relation to the total market" (p. 63). The first temptation would be to regulate these cases by a system of maximum prices for products, and minimum prices for factors. But the author makes light of this method of safeguarding against monopoly; for, in order to be consistent with his views on quantity controls, he regards price controls with little favour. The alternative solution is socialization applied on a large scale. The problem of bringing about equality of income and property is discussed in Chapter III.

Chapter V is devoted to financial policy and the balance of payments. Much space is reserved for the price mechanism, though important concessions are made for discriminatory import controls in preference to currency depreciation (p. 99). Presumably the export of capital, and the allocation of dollars, if they are not to be completely prohibited, will have to be effected by means other than price controls. But, even here, the author dislikes controls so violently that he would prefer to permit the auctioning of import licences, together, presumably, with the sale of holidays abroad by the same means. From this, it is only one step to the selling by the State of petrol coupons, houses and flats, or the services of specialists under the National Health Scheme, to the highest bidder. From France he wants payments in gold, dollars, or in goods "useful" to us (p. 81). But who is to determine what is useful, and by what criteria? Will the judges be those very controllers whom he condemns so violently? Should we not admit that in some cases (perhaps 15 per cent. of all cases) the quantitative mechanism of price controls, rationing and regulations, etc., is better and more democratic, in present conditions, than the drastic use of prices, interest rates and so forth?

The author, in search of a solution of the problems of our society, has decided that this was to be a political book. The highest priorities are given to full employment, to the reshuffling of income and property, and to the restoration of our international balance of payments. By far the largest part of it is a sketch of the author's personal Weltanschauung, and inevitably it contains a considerable amount of value judgment. Professor Meade tells us, on page 38, that he moulds his policy from four basic social aims: freedom; efficiency; security; and equality of income and property. Other social objectives are not even mentioned by name; we are at a loss where to class full employment, or the balancing of international payments, which are discussed throughout the book, let alone other objectives. The four social aims are mixed in doses which are by no means clear. It is readily admitted by the author that, in the great majority of cases, the social objectives may conflict. When they clash, he cuts the Gordian knot with gusto. Arbitrariness and indeterminateness could to some extent be avoided, if we had a generally valid statement of social and political priorities.

On page 64 the author proclaims that industries in which there is, of necessity, a wide divergence between the profit motive and the service of the community should be socialized. This criterion of service is not explained, much as it would help the reader to find his bearings. Yet, on the next page, he will find a footnote in which it is stated that, even in conditions of such a divergence, there might be other motives which should cause us to choose the profit motive. The example given is that of maintaining a competitive daily press, even though economies of large-scale production could be obtained if only one newspaper were allowed to exist.

After a short, and not altogether conclusive, discussion on the pricing policy of socialized industries, we are confronted with the problem of "maximum technical efficiency." This the author considers as important as—perhaps more important than—the problem of finding the best rule of pricing policy. Here again he stumbles over great difficulties. The reasoning becomes so involved that one feels as though one were witnessing some kind of shadow boxing. Of two methods of production, he regards the one which gives us the same output at a "lower total cost" as being the more efficient (p. 66). The solution is so simple, and yet so complicated. If the recipe were to be interpreted literally, then the lowest monetary "costs" would decide which is the most efficient method. The automaticity of the price mechanism would thus be preserved, but the "costs" would have to be interpreted as private costs. This, as is obvious from numerous passages, is not Professor Meade's intention. One of the tenets of his teaching is that costs have

CC-0. In Public Domain. Gurukul Kangri Collection, Haridwar

Digitized by Arya Samaj Foundation Chennai and eGangotri



a social, as well as a monetary dimension. But if costs are to be interpreted in their wider social sense, then the "most efficient method" will by no means coincide with the cheapest in the monetary sense. In the first case, welfare economics goes overboard, and the price mechanism is preserved; in the second, the price mechanism goes overboard, and welfare economics is saved. From this dilemma there is no escape. It must be emphasized that any welfare judgment which is enunciated in advance by the writer as being of general validity will necessarily be highly arbitrary. Only by reference to the changing opinions of the people may welfare pronouncements have any semblance of objectivity. A cheap technique of production may in time become very expensive in welfare terms if the workers find it unpleasant or undignified.

The author's thesis stems from his belief in the possibility of changing, radically and speedily, much of what may be called our political reality. Whether he is right or wrong depends on how many people share his political views, and feel satisfied with their presentation. A. M. N.

3.—*Business Finance and Banking.* (Financial Research Program Studies in Business Financing.) By Neil H. Jacoby and Raymond J. Saulnier. New York: National Bureau of Economic Research, 1947. xix+241 pp. $3.50.

This study was undertaken to answer the question, "Are the business financing functions of commercial banks undergoing eventual decline?" In the course of providing an answer to this question the work provides much of interest on the lending policies of American commercial banks to any reader who is prepared to cope with the mass of data presented and the sometimes too rigid economy of the accompanying analysis. The sharp fall in interest rates during the 1930's led to intensive competition among the various lending agencies, and the commercial banks were active in all markets, long term as well as short and medium term. The surprise occasioned by the statement that "the average charge for medium and long term credit was about equal to the charge for short term loans" is not altogether dispelled by the explanation that the difference was accounted for by the better quality and greater security of the former. One is left with the feeling that some of the short term finance engaged upon by American banks is even now distinctly speculative by British standards. An example of this is provided in the practice of banks aiding small and medium sized businesses in their development on no more security than that offered by the rapidly depreciating assets acquired with the loans. Increased participation in consumer credit financing in the later 1930's and a willingness to seek out by active inquiry potential borrowers not only enabled the commercial banks to withstand the competition of both public and other loan agencies, but to "play a more important role in business financing than in the early 1930's." The authors conclude that the prospects for further expansion are good, yet it is difficult to suppress the thought that this "aggressive loan policy" might prove disastrous, particularly with the smaller banks with limited capital. Further, if undue risks are not to be run, the cost of specialist staff needed for such a policy may prove expensive for the smaller units. Recent discussion of this subject in this country suggests that both the banking community and economists would profit from reading this work. A. R. I.

4.—*Studies in Financial Organization.* By T. Balogh. (National Institute of Economic and Social Research Economic and Social Studies, VI.) Cambridge University Press, 1947. xiii + 319 pp. 8½″. 21*s*.

With more than its share of delay in publication due to the war, and its text covering only the pre-war situation in British banking, this study may not reach as wide a circle of readers as it undoubtedly deserves. The work falls into three parts—the clearing banks, the money and discount markets, and a final section on the institutions comprising the capital market. Dr. Balogh has brought together a great deal of information from a variety of sources, while his views on many topics are, to say the least, clear-cut, and it is partly for this reason that the present reviewer agrees with the author in regarding it as a book for advanced banking students. This is so for the further reason that the treatment of certain subjects requires some prior understanding on the reader's part. For example, the section on making-up policy is not perfectly clear. The treatment of the discount market is rather disappointing, and, while its traditional pre-1930 functions are fully described, much more emphasis might have been placed on the quite remarkable changes that took place in the 1930's. Wartime changes have admittedly overshadowed the earlier transition phase, but, for example, widespread dealing in short term bonds was already evident by the mid '30's. On this point it is a pity that some financial journalist does not produce a study of the post 1931 evolution of the money market and the development of wartime techniques; the student cannot always wade through or even understand the various articles which from time to time appear in the technical journals. It is in the final part of the

CC-0. In Public Domain. Gurukul Kangri Collection, Haridwar

Digitized by Arya Samaj Foundation Chennai and eGangotri



book dealing with the capital market that Dr. Balogh comes into his own. He develops with much detail and considerable force the case against the machinery for raising capital, and his complaint that the "Macmillan gap" remained unfilled has received further proof of its justification by the recent creation of the two finance corporations. Dr. Balogh contends that the rate of investment in this country in the thirties was below the level required to maintain our relative efficiency in the world economy; it still is, but the implication that the shortcomings of the capital market are to blame is hardly justified. The level of wages and the volume of idle labour in this country before the war were not exactly conducive to the creation of a capital intensive economy. The inclusion of two appendices on the Floating Debt and the Bullion Market by Mr. F. W. Paish and Mr. Paul Bareau respectively, together with considerable statistical data, make this a book which will amply repay reading, if only to test one's ideas and beliefs on the subject against those of the author.

A. R. I.

5.—*Imperfect Competition in International Trade.* By S. B. Rangnekar. Bombay and London: Geoffrey Cumberlege, 1947. 8½". xvi + 187 pp. 27*s*.

This volume is the first of a series of works on economics to be published by the University of Bombay. In it Dr. Rangnekar undertakes an analysis of international trade under various conditions of market imperfection. The first two chapters review the nature of imperfect markets, and set out the techniques to be used in analyzing equilibrium and welfare conditions in international trade. In Chapter 3, on "Monopolistic Trade," equilibrium conditions in four possible market situations are discussed. These models are obtained by considering bilateral and multilateral trade in cases where one country has a monopoly in only one of the commodities it exports, and also where its monopoly extends to the whole range of its exports. In Chapter 4 selling costs and product differentiation are introduced, and here three models are examined. First, there is the duopoly case where two countries export different varieties of a product to a third; secondly, the extension of this type of trading to more than two exporting countries; and thirdly, the case where the oligopolists seek to avoid price competition and selling outlays by forming a cartel to restrict output or share the market. Welfare aspects are dealt with in Chapter 5, where the gains from trade under the conditions of each of the above models are discussed. Finally, the monetary factor, capital movements and commercial policy receive a brief treatment in the concluding chapter.

Dr. Rangnekar has not set out to produce a new theory of international trade. Indeed, both in his Introduction and in numerous footnotes, the author draws attention to the work of other writers who have provided the tools he uses with such good effect. *Imperfect Competition in International Trade* is a very useful experiment in welding together the results of two branches of economic theory which have hitherto followed somewhat exclusive lines of development.

P. A. D.

6.—*Municipal Internal Audits.* By Arthur Collins, F.S.A.A. 8th ed. London: Gee & Co., 1948. 8½". 365 pp. 27*s*. 6*d*.

Designed to serve both as a reference manual for the practising accountant, and as a textbook for students preparing for professional examinations, this work has a tendency to fall between two stools. Although the author specifically states that the book should not be regarded as a substitute for more general works on auditing, it is inevitable that sections dealing with departmental audits should contain much matter relating to routine audit work. This the practitioner might find rather tedious in a reference work, but as far as the student is concerned the result is a readable if somewhat lengthy work, in which the legal and accounting aspects of various audits are well blended. There are incidental references to the value of statistics in this field; unfortunately the techniques cited in the text are only briefly developed. Two examples involve the very basis of all statistical work—comparison. It is suggested that if data over a sufficiently long period is available, unusual variations in, say, the receipts of park chair attendants would warrant investigation by the auditor. Further, in checking the takings of, say, two comparable car parks, any marked divergence between the figures should require explanation. There is good sense in these propositions, but one is left wondering if the student is adequately warned of all the pitfalls, by references in the text to the necessity of taking into account all extraneous factors and influences. Common sense, rather than statistics, might prove a more reliable guide to the auditor in these circumstances. A more interesting and profitable field for exploration would appear to arise in test checking. The present method of relying on the senior's experience is probably not so haphazard as might at first appear. But would it not be possible to devise, especially for mechanized offices, statistical tests of the adequacy of the sample of postings and original documents checked?

CC-0. In Public Domain. Gurukul Kangri Collection, Haridwar

Digitized by Arya Samaj Foundation Chennai and eGangotri



The difficulties are all too apparent, yet the need for, and the value of, such an innovation can hardly be questioned. Perhaps in a later edition Mr. Collins might comment on the feasibility of the proposal in the light of his wide experience. A. R. I.

### 7.—*Other New Publications*

*Morrell, A. J. H.* An Introduction to Index Numbers. London: H. F. L. (Publishers) Ltd., 1948. 8¼″. 48 pp. 4*s.* 6*d.*

[The 9th edition of *Statistics and their Application to Commerce* by A. Lester Boddington, incorporates, as chapters IX and X, the contents of this booklet, replacing the earlier text by an account of the various methods now in use for calculating index numbers, with descriptions of the principal series currently published in this country. Examples permit the student, in whom only an elementary knowledge of mathematics is assumed, to gain practice in the different methods and to grasp the nature of the problems involved in the construction of each series.]

*Coles, K. Adlard.* Accountancy Careers. Revised by G. E. Radford. London: Gee, 1948. 8½″. 87 pp. 7*s.* 6*d.*

*Burton, J. H.* Costing for Control. London: Gee, 1948. 8½″. 96 pp. 12*s.* 6*d.*

*Simpkins, John G.* Accounts from Incomplete Records. London: Gee, 1948. 8½″. vii + 64 pp. 12*s.* 6*d.*

[The first book of this group is of some general interest to those who handle for statistical purposes the figures accountants provide, and is very readable. Its intention, however, is rather to guide young men attracted to the profession and it carries this out admirably. The stages of training are outlined, and the different types of work on which the trained accountant can use his skill are lucidly described in sufficient detail to assist the beginner to choose the branch in which he is most likely to succeed. The syllabus of each examining body is reproduced, and it may be noted that most of these call for some knowledge of statistics. The information is well arranged, and appears to cover all points on which guidance may be sought.

The other two books are technical and of less interest to statisticians.]

*Bibliography of Selected Statistical Sources of the American Nations.* Washington: Inter-American Statistical Institute, 1947. xvi + 689 pp. 9″. $7.50.

[The primary object of this book is "to present a list of selected references to the most important statistical sources relating to the twenty-two American nations and to the body of statistical science methodology." Its 2,500 references, relating mainly to books and monographs but also to annuals and periodicals, are arranged in a main list by countries, opening with an international section, and closing with one on non-geographic material. Each section is subdivided into nine subject classifications, in each of which articles are listed in chronological order. Each entry gives identifying particulars about the article with a brief comment on its contents, sufficient to let the statistician judge quickly the probable value of the source for his purpose. Alphabetical and subject indexes follow this main list.]

*Benham, Frederic.* Economics. 4th ed. London: Pitman, 1948. xvii + 542 pp. 12*s.* 6*d.*

[In this new edition the only substantial alteration is that the final chapter deals with Post-war Economic Problems instead of War Economics. Where necessary, factual information is brought up to date as far as 1946. The text-book as it now stands gives a student a clear exposition of theory, illustrated by numerous graphs, an account of the economic system as it worked until very recently, and a discussion of changes now in progress.]



CC-0. In Public Domain. Gurukul Kangri Collection, Haridwar

Digitized by Arya Samaj Foundation Chennai and eGangotri



# STATISTICAL NOTES

## British Official Statistics

The Economic Survey for 1949 (Cmd. 7647) gives some account of the progress that is being made in the development of home agriculture as part of the policy of increasing supplies from home sources in order to save food imports. Owing to the relatively high level of production reached in pre-war days, the problem of increasing the output of human food from the already cultivated land of the country is full of difficulties, and rapid advances cannot be expected. On the whole, however, agricultural output in 1948 was higher, in every branch, than in the preceding year, and there was a marked growth in the numbers of all kinds of live stock. The agricultural expansion programme for 1949 contemplates further increases, as indicated in the following tables:

*Acreage of Crops in the U.K. (thousands)*

| | *Average* 1936–37 to 1938–39 | 1947–48 | 1948–49 *Estimate* | 1949–50 *Programme* |
|---|---|---|---|---|
| Bread Grains | 1,872 | 2,199 | 2,340 | 2,600 |
| Other Grains | 3,429 | 5,866 | 6,016 | 6,200 |
| Potatoes | 723 | 1,330 | 1,548 | 1,400 |
| Sugar Beet | 335 | 395 | 413 | 400 |
| Linseed | 2 | 38 | 86 | 200 |

*Live Stock Production (percentage of pre-war)*

| | | | | |
|---|---|---|---|---|
| Milk | 100 | 109 | 119 | 121 |
| Eggs | 100 | 83 | 98 | 108 |
| Beef and Veal | 100 | 83 | 85 | 93 |
| Mutton and Lamb | 100 | 55 | 67 | 70 |
| Pig Meat | 100 | 29 | 43 | 50 |

The acreage target for bread grains (mainly wheat) for 1949 has been put at 2,600,000 acres, an addition of a quarter of a million acres to the previous year's total, and to encourage cultivation the guaranteed price is being raised. Home produced wheat, it is pointed out, saves dollar expenditure, and it is vital to secure the maximum acreage.

The live stock programme foreshadows a moderate advance on the previous year, but depends on adequate supplies of feeding stuffs, either home grown or imported. As imported feeding stuffs are affected by supply and currency difficulties, it is very necessary to raise home production above what has been attained in the past. One direction in which it is hoped to accomplish this is by improving the grass land, which represents over half the total cultivated area of the United Kingdom. In this task the supply of fertilizers is an important factor. At present the quantities used are at least double pre-war, and the demand is likely to increase in the later years of the expansion programme.

As regards man-power, the number of workers available is fairly close to the industry's needs, though there is a shortage of temporary labour at harvest time.

A feature of the programme is the recognition of the need for the continued investment of capital in order to maintain and improve equipment in the form of machinery and buildings. In 1948 it is estimated that the expenditure by farmers on machinery (including replacements) amounted to £57 million, and it is likely to be about the same in 1949. Great advances have been made in this direction in recent years, and it is believed that the number of tractors of all kinds in use has risen from 50,000 in 1939 to 250,000 in 1948, while the employment of implements of other kinds has much developed. Considerable progress is also being made in building, on which the expenditure in 1949 is estimated at £31 million as compared with £21 million in 1947.

Although, in general terms, gratifying progress is being made in this task of reducing imports from abroad by increased home production, it still remains difficult to estimate with any precision exactly what, on balance, is being accomplished, owing to the fact that the home output is partly dependent for its production upon feeding stuffs and fertilisers which have to be imported from abroad.

CC-0. In Public Domain. Gurukul Kangri Collection, Haridwar

Digitized by Arya Samaj Foundation Chennai and eGangotri



## CURRENT NOTES

The Society has received the first number of the *Journal of the Indian Society of Agricultural Statistics*, the aims of which "are to promote the study of, and research in, statistical theory in the widest sense of the term and its application to agriculture, animal husbandry, agricultural economics and allied problems."

Each volume of the Journal will contain about 200 pages and will be issued in two parts annually. The first part sets a high standard for future numbers. The first of the contents is the Presidential Address, given at the first annual meeting of the Society by the Hon. Dr. Rajendra Prasad, Minister of Food and Agriculture in the Indian Government. The address by the Minister of Finance for India on "Statistical Organisation for India with Special Reference to Agriculture" touches on the general and practical problems associated with the development of a wide statistical service. This question is considered from many points of view in the ensuing discussion. Other articles include a review of Crop Surveys in India, and several on certain aspects of statistical theory. The article on the Estimation of Genetic Variability in Plants is an example of the application of statistical methods to practical problems.

The subscription to the Journal is Rs. 20 per year—single copies Rs. 10. Enquiries should be addressed to the Secretary, The Indian Society of Agricultural Statistics, Post Box No. 310, New Delhi.

---

It is interesting to learn that the United States Civil Service Commission, having recently introduced new specifications for statisticians in the Federal Service, are about to hold the first of their examinations for the grade. The closing date for applications was March 30th, 1949. For this examination no written answers to set papers are required. Instead, candidates will be rated on their education and experience.

Considering the volume of statistical material that has long flowed forth from the Federal Civil Service, it is surprising that provision has only recently been made for the qualification of statistical grades by examination.

---

The Secretary-General of the Hispanic and the Luso-Brazilian Councils has brought to the Society's notice a large consignment of books and reports which has been recently received from the *Instituto Brasileiro de Geografia e Estadistica*. These volumes include economic, financial and statistical surveys undertaken by the Brazilian Treasury and other Departments, and several other institutions. The reports dealing with general economic and social affairs relate mainly to the years 1946–1948, while the detailed trade and shipping returns cover a period of roughly 1941 to 1947. In addition there are reports on prices, education, production, banking, industry, labour and transport.

The Secretary-General extends to Fellows of the Society a cordial invitation to consult this collection or to borrow volumes from it. Although it will not be possible to catalogue all the works for some time, lists are available indicating the items contained in the collection. The address at which the volumes are housed is Canning House, 4, Upper Berkeley Street, W.1.

---

CC-0. In Public Domain. Gurukul Kangri Collection, Haridwar

Digitized by Arya Samaj Foundation Chennai and eGangotri



## OBITUARY

### James William Verdier, O.B.E.

By the death of Mr. James William Verdier, on December 26th, 1948, at the age of 82, the Society has lost one of its oldest members. He was for many years closely associated with A. W. Flux (later Sir Alfred) and H. W. Macrosty in the Statistical Department of the Board of Trade, the three of them constituting a notable trio. His official career began in March, 1885, when he entered the Finance Department of the Board of Trade, having taken the first place in the examination for "Man clerk in the Lower Division of the Civil Service." After some 10 years he was transferred to the Commercial, Labour and Statistical Department, and for a while was in charge of the *Labour Gazette*, but his chief interest was in shipping statistics. Promotion in those days was slower than now, and it was not until 1904 that he attained the rank of Staff Officer. At this time he was responsible for a memorandum on freights for the second fiscal volume (*British and Foreign Trade and Industry*—2nd series), in which he worked out the first index number of freights, based on the circulars of the larger shipping companies. In May, 1907, he was appointed as Staff Clerk to superintend the staff of the newly formed Census of Production Office. During the first world war, Verdier moved across to take charge of the War Risks Insurance Office, where he showed considerable organizing ability and supervisory capacity. In 1919 he was working with the British Peace Delegation in Paris, but he came back as a Principal to his old Department, where he was again largely concerned with statistics of shipping and seamen. He stayed on for a year or two after the usual retiring age in order to help with the Report on the 1924 Census of Production. He retired at the end of January, 1928.

Verdier's interests in the Board were not entirely statistical. In the days before there were "Territorials" he was an enthusiastic volunteer, and during the 'twenties he was a prominent member of a small chamber music club, distinguishing himself on the violin, and helping, when necessary, with the viola.

Immediately after his retirement he went to South Africa with his wife, on a visit to their daughters, but was taken seriously ill on the voyage home, and was never thereafter a robust man. Even so he became Secretary of the "Survey of London Life and Labour" under the direction of the late Sir H. Llewellyn Smith, at the London School of Economics, the results of which were published during the period 1930 to 1935.

Verdier's activities in the Society began with his election as a Fellow in November, 1921, when he was proposed by Flux, and seconded by Stamp. He read a paper on "The Interpretation of Statistics relating to Shipping Casualties and Loss of Life at Sea" in June, 1922, and was a member of Council from 1931 to 1936.

The main recollection of Verdier in the minds of those who knew him was his quiet kindliness. His work during the 1914–18 war was described as "quiet and unostentatious, but thoroughly efficient," and the phrase epitomizes his official character. He was full of good humour, and in his lighter moments had a fund of entertaining stories. During the 'twenties his daily association with Flux, his chief, and Macrosty, in the Office and at their luncheon table in the Civil Service Stores created a triple entente, generally recognized as a distinguished feature of statistical life outside as well as within the Statistical Department of the Board of Trade.

R. F. G.

CC-0. In Public Domain. Gurukul Kangri Collection, Haridwar

Digitized by Arya Samaj Foundation Chennai and eGangotri



## STATISTICAL AND ECONOMIC ARTICLES IN RECENT PERIODICALS

UNITED KINGDOM—

*Accounting Research*—

*November* 1948—The presentation of the central government accounts: *F. Sewell Bray* and *R. Stone*. Accounting research: *G. O. May*. Fifty years: *F. R. M. de Paula*. The nature of income and capital: *F. Sewell Bray*. The use of departmental accounts, in particular as a guide to the allocation of floor space: *E. B. Palmer*. Replacement in costs —an economist's view: *L. T. Little*.

*Annals of Eugenics*—

*November* 1948—The likelihood equation, consistency and the maxima of the likelihood function: *V. S. Huzubazar*. Some observations on heredity in breast cancer and leukemia: *Th. Busk*. Note on methods of analyzing cancer pedigrees: *Mary N. Karn*. A genetical study of human mammary cancer: *L. S. Penrose*, *H. J. Mackenzie* and *M. N. Karn*.

*The Banker*—

*November* 1948—The Australian prospect: *D. B. Copland*. Staffing the clearing banks: V—A personal rejoinder: *J. Tonkyn*. Monetary systems of the Colonies: V—Malaya: *A Special Correspondent*. Scotland—an economic and industrial survey: Scottish population problems: *F. S. Taylor*.

*December* 1948—The economic consequences of Mr. Truman. Debate on steel: *G. D. H. Cole* and *W. Willis*. Monetary systems of the Colonies: VI—The West Indies: *A Special Correspondent*.

*Biometrika*—

*December* 1948—Some further notes on the use of matrices in population mathematics: *P. H. Leslie*. The transformation of Poisson, binomial and negative-binomial data: *F. J. Anscombe*. Some theorems on time series. II. The significance of the serial correlation coefficient: *P. A. P. Moran*. Some results in the testing of serial correlation coefficients: *M. H. Quenouille*. Fractional replication arrangements for factorial experiments with factors at two levels: *K. A. Brownlee*, *B. K. Kelly* and *P. K. Loraine*. The relationship between finite groups and completely orthogonal squares, cubes and hypercubes: *K. A. Brownlee* and *P. K. Loraine*. Systematic sampling of continuous parameter populations: *A. E. Jones*. Continuation of Dr. Jones's paper: *M. G. Kendall*. The precision of observed values of small frequencies: *J. B. S. Haldane*. Note on Professor Haldane's paper regarding the treatment of rare events: *E. S. Pearson*. A further note on the mean deviation: *H. J. Godwin*. A note on the asymptotic distribution of range: *D. R. Cox*. On the role of variable generation time in the development of a stochastic birth process: *D. G. Kendall*. $2 \times 2$ tables: the power function of the test on a randomized experiment: *E. S. Pearson* and *M. Merrington*. Statistical analysis of a non-orthogonal tri-factorial experiment: *W. L. Stevens*. Comparisons of heights and weights of German civilians recorded in 1946–7 and Royal Air Force and other British series: *G. N. Morant*. Testing the significance of correlation between time series: *G. H. Orcutt* and *S. F. James*. Note on the median of a multivariate distribution: *J. B. S. Haldane*. A property of rank correlations: *H. E. Daniels*. Approximation errors in distribution of independent variates: *H. O. Hartley*. Correlation between $\chi^2$ cells: *F. N. David*. Note on "Proofs of the distribution law of the second order moment statistics": *J. Wishart*.

*British Journal of Social Medicine*—

*October* 1948—Sickness and stress in operational flying: *D. D. Reid*. The gerontological aspects of atheroma: *E. Geiringer*. The statistical specificity of a code personnel cypher sequence: *L. Hogben* and *K. W. Cross*. An application to a laboratory problem of discriminant function analysis involving more than two groups: *R. F. Jennison*, *J. B. Penfold* and *J. A. Fraser Roberts*.

CC-0. In Public Domain. Gurukul Kangri Collection, Haridwar

Digitized by Arya Samaj Foundation Chennai and eGangotri



*Economica*—

*November* 1948—Consumption theory in terms of revealed preference: *P. A. Samuelson.* A comment on duopoly: *A. C. Pigou.* The multiplier: *R. Turvey.* History and ourselves: *G. J. Renier.* The diagrammatic representation of national income flows: *R. C. Tress.* Losses of U.K. merchant ships in World War II: *M. G. Kendall.* New light on an old story: *D. H. Robertson.*

*Economic Journal*—

*December* 1948—The price system: *Sir H. Henderson.* National income, national expenditure and the balance of payments. Part I: *J. E. Meade.* Notes on some dynamic models: *W. J. Baumol.* The structure of the British aluminium industry: *S. Moos.* The case for indirect taxation: *A. Henderson.*

*Heredity*—

*December* 1948—The estimation of gene frequencies from family records. II. Factors with dominance: *D. J. Finney.* Rh frequency in the people of Lucknow: *D. N. Majumdar.*

*Oxford University Institute of Statistics, Bulletin*—

*November* 1948—Family expenditure in 1947. Part I. Income and Outlay: *T. Schulz.* The terms of trade of selected countries, 1870–1938: *K. Martin.*

*December* 1948—Family expenditure in 1947. Part II. Outlay on food and nutritional intake: *T. Schulz.* The Japanese currency reform: a lesson in monetary experience: *A. Morgan.*

*January* 1949—Is there bias in the interim index of retail prices?: *D. Seers.* Nutrition at low cost: *T. Schulz.*

*Population Studies*—

*December* 1948—Family allowances in Belgium: *E. Susswein.* The longevity of Jews in Canada, 1940–1942: *M. Spiegelman.* The estimation of total family size of occupation groups from the distribution of births by order and duration of marriage: *J. Hajnal.* Population statistics and population registration in Norway. Part 2: *J. E. Backer.* A sample survey of the African population of Southern Rhodesia: *J. R. H. Shaul* and *C. A. L. Myburgh.* Some comments on Mr. Karmel's paper "The relations between male and female reproduction rates": *J. Hajnal.* A rejoinder to Mr. Hajnal's comments: *P. H. Karmel.* A note on some vital statistics of a primitive peasant community in Sierra Leone: *R. D. Harding.*

*Review of Economic Studies*—

Vol. XVI (I) No. 39—Economic thought in the Soviet Union: I. Economic law and the theory of value: *A. Zauberman.* Prices and profits in state enterprise: *A. M. Henderson.* The Belgian monetary reform: an appraisal of the results: *V. A. de Ridder.* Period analysis and the demand for money: *C. Kennedy.* The income terms of trade: *G. S. Dorrance.*

*Royal Society of Edinburgh, Proceedings*—

Vol. LXIII, Part II—The fall in the fertility of Scottish women during the period 1875–1939: *R. S. Barclay* and *W. O. Kermack.*

*Statistical and Social Inquiry Society of Ireland, Journal*—

Vol. XVIII—An economic basis for Irish agriculture: *Prof. J. Johnston.* Theories of adjustment of the balance of payments under fixed exchanges: *B. Menton.* Excess demand and investment in the United Kingdom: *B. R. Williams.* Natality in Dublin in the years 1943, 1944 and 1945: *S. Lyon.*

AUSTRALIA—

*Economic Record*—

*December* 1948—Building industry statistics: *J. M. Hamilton* and *J. M. Wark.* Australian tariffs and imperial control: *J. A. la Nauze.*

CC-0. In Public Domain. Gurukul Kangri Collection, Haridwar

Digitized by Arya Samaj Foundation Chennai and eGangotri



UNITED STATES—

*Actuarial Society of America, Transactions—*

*October* 1948—Construction of the state and regional life tables, 1939–41: *M. Spiegelman*. Interlocking interpolation curves: *A. White*. Taxation and inflation control: *L. Shere*. The burden of import duties: comment rejoinder: *A. E. Kahn*. Marginal cost constancy and its implications: *H. Apel*.

*American Academy of Political and Social Science, Annals—*

*November* 1948—Post-war reconstruction in Western Germany. (Whole number.)
*January* 1949—Juvenile delinquency. (Whole number.)

*American Economic Review—*

*December* 1948—The problem of capital accumulation: *E. D. Domar*. Planned economy in Norway: *L. R. Klein*. Exit basing point pricing: *F. A. Fetter*. Basing point decisions and business practices: *C. D. Edwards*.

*American Statistical Association, Journal—*

*December* 1948—Commercial uses of sampling: *J. S. Stock* and *J. R. Hochstim*. Variation of the frequency of fatal quarrels with magnitude: *L. F. Richardson*. Bank reserves and business fluctuations: *C. Warburton*. The ordering of $n$ items assigned to $k$ rank categories by votes of $m$ individuals: *G. L. Schuyler*. Levels of significance for variance ratio of two samples of equal size: *C. J. Kirchen*. Main effects and interactions: *D. J. Finney*. A test for symmetry in contingency tables: *A. H. Bowker*. The War Production Board's statistical reporting experience, Part IV: *D. Novick* and *G. A. Steiner*.

*Annals of Mathematical Statistics—*

*December* 1948—Testing compound symmetry in a normal multivariate distribution: *D. F. Votaw, Jr.* Branching processes: *T. E. Harris*. Most powerful tests of composite hypotheses. I. Normal distributions: *E. L. Lehmann* and *C. Stein*. Symbolic matrix derivatives: *P. S.* Dwyer and *M. S. Macphail*. On the limiting distributions of estimates based on samples from finite universes: *W. G. Madon*. A non-parametric test of independence: *W. Hoeffding*. On prediction in stationary time series: *H. O. A. Wold*. Generalization to $N$ dimensions of inequalities of the Tchebycheff Type: *B. H. Camp*. Boundaries of minimum size in binomial sampling: *R. L. Plackett*. Non-parametric tolerance limits: *R. B. Murphy*. The fourth degree exponential distribution function: *L. A. Aroian*. An approximation to the binomial summation: *G. F. Cramer*.

*Biometrics—*

*December* 1948—Systematic and random sampling for estimating egg production in poultry: *A. W. Nordskog* and *S. Lee Crump*. Sampling alyce clover for chemical analyses: *J. A. Rigney* and *R. E. Blaser*. The analysis of covariance and non-orthogonal comparisons: *M. H. Quenouille*. On a formula for the prediction of cranial capacity: *C. R. Rao* and *D. C. Shaw*. The components of genetic variance in populations of bi-parental progenies and their use in estimating the average degree of dominance: *R. E. Comstock* and *H. F. Robinson*.

*Econometrica—*

*January* 1949—The indeterminacy of absolute prices in classical economic theory: *D. Patinkin*. On the zeros of homogeneous functions: *R. Frisch*. Determination of linear relations between systematic parts of variables witth errors of observation the variances of which are unknown: *R. C. Geary*. Econometrics and thermodynamics: a remark on Davis' theory: *J. H. C. Lisman*.

*Harvard Business Review—*

*November* 1948—The basing point cases: *N. C. Head*. Concepts of income: *G. D. Bailey*. Marketing prefabricated houses: *W. J. Wittausch*. What's ahead for prices and business?: *J. L. Snider*.

*Milbank Memorial Fund Quarterly—*

*January* 1949—A concept of the etiological complex of deficiency states with especial consideration of conditions: *H. D. Kruse*. Population and wealth in Egypt: *C. Issawi*.

CC-0. In Public Domain. Gurukul Kangri Collection, Haridwar

Digitized by Arya Samaj Foundation Chennai and eGangotri



*Monthly Labor Review*—

*November* 1948—World prices, 1948 compared with 1939.

*Quarterly Journal of Economics*—

*November* 1948—The economics of a "free" society: *O. H. Taylor.* Investment repercussions: *L. M. Lachman.* Equilibrium in international trade: a diagrammatic analysis: *R. E. Baldwin.*

*Review of Economics and Statistics*—

*November* 1948—The direction of change in income and the consumption of function: *R. P. Mack.* Keynes and economic analysis to-day: *J. W. Angell.* Outline of a system of multicompensatory trade: *R. Frisch.* Professor Frisch on discrimination and multilateral trade: *R. Hinshaw.* Exchange depreciation and economic readjustment: *T. Balogh.* A note on Professor Schultz's analysis of the long run agricultural problem: *C. Kaysen* and *J. H. Lorie.* Woytinsky on consumption and savings: *V. L. Bassie.* Consumption-saving function: comments: *I. Friend.* Monetary velocity and monetary policy: *C. Warburton.*

AUSTRIA—

*Statistische Vierteljahresschrift*—

Vol. I, No.1—Über zufällige Schwankungen statistischer Zahlen: *W. Winkler.* Die ökonometrische Bewegung und die Statistik: *V. Nikša.* Eine österreichische "Volksbefragung": *W. Winkler.* Tafel der Funktion $n = f(i, p) = \frac{90\ 000(1 - p)}{i^2 . p}$: *L. Bosse.*

Vol. I, No. 2—Statistische Fundamentalgrössen: *A. Adam.* Der Wandel der Kinderaufzuchtkosten in Wien 1926–1938 und sein Einfluss auf den Geburtenrückgang: *O. Winkler.* Ein mass der seelischen Komponente des Geburtenrückganges: *W. Winkler.*

Vol. I, No. 3/4—Konstruktionselemente statistischer Modelle: *A. Adam.* Die Bevölkerungsstatistik bei den Klassikern der Wahrscheinlichkeitstheorie: *H. Gnambs.* Untersuchungen über das gegenseitige Heiratsalter: *K. Winkler.* Randglossen zur Rückfallstatistik: *W. Winkler.*

BELGIUM—

*Bulletin de l'Institut de Recherches Économiques et Sociales*—

*December* 1948—L'analyse structurelle des variations économiques: *J. Akerman.* La transformation économique de la Belgique de 1832 à 1844: *P. Scholler.* Analyse des phénomènes logistiques à l'aide de la courbe normale intégrale: *L. Dor.*

BRAZIL—

*Revista Brasileira de Estatistica*—

*Jan.–March* 1948—Séries estatísticas: *A. P. de T. Piza.* Glossário de têrmos usuais em análise fatorial: *O. A. L. Martins.* Determinação da nupcialidade feminina, segundo a idade, no Brasil, com base na apuração censitária do estado conjugal, e aplicações ao cálculo da taxa de nupcialidade geral e à construção de uma tábua de nupcialidade: *G. Mortara.*

CZECHOSLOVAKIA—

*Statistický Obzor*—

Vol. XXVIII, Part 4—Main differences in national income concepts and the respective balances: *J. Krejčí.* A new method of mathematical treatment of parabolic trend lines and correlation: *E. Fraenkel.* [Text in Czech—English Summaries.]

FRANCE—

*Journal de la Société Statistique de Paris*—

*November–December* 1948—L'introduction des probabilités dans les sciences concrètes: *M. Dumas.* Perspectives sur l'effectif de la population française jusqu'a la fin du XXe siècle: *P. Depoid.* Épidémiologie de la mosaïque du tabac: *D. Schwartz.* La production industrielle française depuis 1946: *R. Remery.* Les fondements statistiques de l'esprit des

CC-0. In Public Domain. Gurukul Kangri Collection, Haridwar

Digitized by Arya Samaj Foundation Chennai and eGangotri



lois: *M-L. Dufrenoy.* Les principes de la physique sociale: *J. Dufrenoy.* A propos de l'enquête internationale sur l'estimation des paramètres: *L. Féraud.*

*January–February* 1949—Répertoire professionnel des membres de la Société. Les nombres indices: *R. Roy.* Les pourfendeurs de statistiques: *C. Penglaou.*

*Population*—

*October–December* 1948—Fréquence et répartition des mariages consanguins en France: *J. Sutter* and *L. Tabah.* La mortalité infantile dans les familles nombreuses: *L. Henry.* Deux modalités de la politique de l'aide à la famille. Prestations en espèces et prestations en nature: *J. Doublet.* La situation démographique de la Grande-Bretagne. Comparaison avec celle de la France: *J. Bourgeois-Pichat.* Les transferts de populations entre l'Hindoustan et le Pakistan: *S. Chandrasekhar.* Le peuplement des nouveaux territoires polonais: *J. Daric.*

*Revue d'Économie Politique*—

*September–October* 1948—La France économique en 1947: Généralités. Reconstruction. Finances. (Whole number.)

HOLLAND—

*Statistica*—

Vol. 2, No. 5/6—Foutentheorie en wiskundige statistiek: *H. C. Hamaker.* Superpositie van twee frequentieverdelingen: *J. Sittig.* De omvang van de steekproef bij een enkelvoudig steekproefsysteem: *J. H. Enters.* Enkele opmerkingen over de mogelijkheid van toepassing van mathematischstatistische methoden bij tijdstudieproblemen en het bijzender bij het Bedaux-systeem: *Th. A. de Leeuw.* De bewerking van resultaten van veldproeven door herleiding van de opbrengstcijfers in beide richtingen van het proefveld: *Ir. A. Stoffels.* Over correlatierekening en de herleiding van klimatologische reeksen: *V. Verangot.*

ITALY—

*Annali della Sperimentazione Agraria*—

Vol. II, Num. 5—Principali calcoli statistici ed applicazione per le ricerche nel campo agrario: *S. Di Prima.*

*Giornale degli Economisti e Annali di Economia*—

*September–October* 1948—Sguardo alla situazione e politica economicofinanziaria degli Stati Uniti: *V. Marrama.*

*November–December* 1948 (Nell'anniversario della nascita di Vilfredo Pareto)—Pareto matematico ed economista: *L. Amoroso.* Vilfredo Pareto, il sociologo: *P. Jannaccone.* Modelli di commercio internazionale: *J. Tinbergen.* La teoria della circolazione di V. Pareto: *F. Chessa.* Come un supposto paradosso della pratica degli scambi internazionali, non sia che un malinteso della teoria: *A. de Pietri-Tonelli.* L'equilibrio sociale ed il classismo: *A. Lanzillo.* Monopoli e concorrenze nel pensiero di Pareto: *F. Vinci.* Un manoscritto inedito di Vilfredo Pareto: *G. N. Bousquet.*

*Statistica*—

*July–September* 1948—Sui saggi medi d'incremento della popolazione: *V. Castellano.* Sulla variabilità relativa: *T. Salvemini.* Un censimento inedito dello Stato Pontificio (26 marzo 1769): *A. Ferrantini.*

MEXICO—

*Estadística*—

*June* 1948—Análisis de las opiniones recibidas sobre las preguntas y definiciones a formularse en el censo de las Americas de 1950: *R. L. Vegas.* La enseñanza estadística en el hemisferio occidental: *M. da Silva Rodrigues.* Geography and cartography for census purposes in Latin America: *J. Zarur.* El desarrollo y uso de los métodos estadisticos en los hospitales: *P. M. Densen.* El papel futuro de la Sociedad Econométrica en las estadisticas internacionales: *C. F. Roos.*

CC-0. In Public Domain. Gurukul Kangri Collection, Haridwar

Digitized by Arya Samaj Foundation Chennai and eGangotri



SWEDEN—

*Ekonomisk Tidskrift*—

*December* 1948—Banksystemets likviditetsregler: *B. Kragh.* Ökonometriske metoder: *A. S. Svendsen.*

SWITZERLAND—

*Schweizerische Zeitschrift für Volkswirtschaft und Statistik*—

*December* 1948—Vilfredo Pareto und seine Bedeutung für die Gegenwart: *O. Weinberger.* Rückblick auf die Soziologie Vilfredo Paretos: *H. Karrer.* Grundfragen des Zahlungsbilanzausgleichs: *E. Küng.* Examen de conscience ou de quelques expériences monétaires contemporaines: *M. van Zeeland.* Wesen und Verhalten der Umlaufgeschwindigkeit des Geldes: *S. von Sagaroff.*

CC-0. In Public Domain. Gurukul Kangri Collection, Haridwar

Digitized by Arya Samaj Foundation Chennai and eGangotri



# LIST OF ADDITIONS TO THE LIBRARY

Since the issue of Part IV, 1947, the Society has received the publications enumerated below.

## I.—OFFICIAL PUBLICATIONS

### (a) United Kingdom

*Agriculture and Fisheries, Ministry of.* First report of the Committee on Agricultural Valuation. London: H.M.S.O., 1948. 14 pp. 9½″. 4*d.*

*Central Statistical Office*

Annual abstract of statistics. No. 84, 1935–1946. London: H.M.S.O., 1948. viii, 271 pp. 11″. 10*s.*

Standard industrial classification. London: H.M.S.O., 1948. 33 pp. 9¾″. 9*d.*

*Colonial Office.*

Colonial annual reports, 1946: Aden. 75 pp. 8¼″. 2*s.* Bahama Islands. 44 pp. 8¼″. 1*s.* 3*d.* Basutoland. 88 pp. 8¼″. 2*s.* 6*d.* Bechuanaland Protectorate. 88 pp. 8¼″. 3*s.* Bermuda. 36 pp. 8¼″. 1*s.* 6*d.* British Guiana. 95 pp. 8¼″. 2*s.* 6*d.* British Honduras. 48 pp. 8¼″. 2*s.* Brunei. iv, 92 pp. 9½″. 4*s.* 6*d.* Cayman Islands. 28 pp. 8¼″. 1*s.* 3*d.* Cyprus. 56 pp. 8¼″. 2*s.* The Gambia. 50 pp. 8¼″. 2*s.* Gibraltar. 67 pp. 8¼″. 2*s.* 6*d.* Gold Coast. 136 pp. 9¾″. 5*s.* 6*d.* Jamaica. 127 pp. 9½″. 3*s.* Kenya. 105 pp. 8¼″. 3*s.* Mauritius. 139 pp. 8¼″. 4*s.* Nigeria. 118 pp. 8¼″. 3*s.* Northern Rhodesia. 58 pp. 8¼″. 2*s.* 6*d.* Nyasaland. 60 pp. 8¼″. 2*s.* St. Lucia. 75 pp. 8¼″. 2*s.* St. Vincent. 77 pp. 8¼″. 2*s.* Seychelles. 48 pp. 8¼″. 2*s.* Sierra Leone. 56 pp. 8¼″. 2*s.* Singapore. 111 pp. 9½″. 7*s.* 6*d.* Swaziland. 62 pp. 8¾″. 2*s.* Tonga. 22 pp. 8¼″. 1*s.* 3*d.* Trinidad and Tobago. 92 pp. 8¼″. 3*s.* 6*d.* Turks and Caicos Islands. 22 pp. 8¼″. 1*s.* Uganda. 112 pp. 8¼″. 3*s.* Zanzibar. 64 pp. 8¼″. 2*s.* London: H.M.S.O., 1948.

The colonial empire (1947–1948). London: H.M.S.O., 1948. Cmd. 7433. viii, 101 pp. 9½″. 2*s.*

Memoranda on colonial fertilizer experiments. 1. Planning and conduct of fertilizer experiments, by A. B. Stewart . . . 2. Fertilizer experiments in colonial agriculture, by E. M. Crowther . . . London: H.M.S.O., 1947 (Colonial No. 214). 28 pp. 9½″. 6*d.*

Report of West African Oilseeds Mission. London: H.M.S.O., 1948. 60 pp. Maps. 9½″. 1*s.* 6*d.*

*Committee of Privy Council for Medical Research.* Medical research in war: report of the Medical Research Council for the years 1939–45. London: H.M.S.O., 1948. 455 pp. 9½″. 7*s.* 6*d.*

*Commonwealth Economic Committee*

Dairy produce: a summary of figures of production, trade and consumption relating to butter, cheese, preserved milk, casein, eggs, egg products, margarine. . . . London: H.M.S.O., 1948. 106 pp. 9¾″. 5*s.*

Industrial fibres: a summary of figures of production, trade and consumption relating to cotton, wool, silk, flax, jute, hemp, mohair, coir and rayon. . . . London: H.M.S.O., 1948. 137 pp. 9¾″. 5*s.*

Plantation crops: a summary of figures of production, trade and consumption relating to sugar, tea, coffee, cocoa, spices, tobacco and rubber. . . . London: H.M.S.O., 1948. 102 pp. 9¾″. 5*s.*

Vegetable oils and oilseeds: a summary of figures of production, trade and consumption relating to groundnuts, cottonseed, linseed, soya beans, coconut and palm products, olive oil, and other oilseeds and oils. . . . London: H.M.S.O., 1948. 108 pp. 9¾″. 5*s.*

*Education, Ministry of*

Education for management. Management subjects in technical and commercial colleges: report of a special committee appointed by the Minister of Education. London: H.M.S.O., 1947. 32 pp. 9½″. 6*d.*

Report of the Burnham Committee representative of associations of local education authorities and associations of teachers, on scales of salaries for teachers in primary and secondary schools maintained by local education authorities, England and Wales, 1948. London: H.M.S.O., 1948. 46 pp. 9¾″. 1*s.*

CC-0. In Public Domain. Gurukul Kangri Collection, Haridwar

Digitized by Arya Samaj Foundation Chennai and eGangotri



Report of the Burnham Committee . . . on scales of salaries for teachers in establishments for further education, including technical and commercial colleges and institutes, art colleges and schools maintained by local education authorities, England and Wales, 1948. London: H.M.S.O., 1948. 39 pp. 9¾″. 9*d.*

*Forestry Commission.* Empire forests and the war: statistics prepared for the fifth British Empire Forestry Conference, Great Britain, June, 1947. London: H.M.S.O., 1948. ii, 18 pp. 11″. 1*s.*

*General Register Office.* Matters of life and death. London: H.M.S.O., 1948. 20 pp. 8¼″. 6*d.*

*Health, Ministry of, Dept. of Health for Scotland, Ministry of Labour and National Service.* Report of the Working Party on the recruitment and training of nurses. London: H.M.S.O., 1947. vi, 122 pp. 9½″. 2*s.* 6*d.*

*Home Office, Scottish Home Department*

Final report of the Committee on Electoral Law Reform. London: H.M.S.O., 1947., Cmd. 7286. 30 pp. 9½″. 6*d.*

Capital punishment. London: H.M.S.O., 1948, Cmd. 7419. 20 pp. 9¾″. 6*d.*

*Imperial Institute.* The mineral industry of the British Empire and foreign countries. Statistical summary (production, imports and exports) 1938–1944. London: H.M.S.O., 1948. iv, 380 pp. 9½″. 21*s.*

*Interdepartmental Committee on Social and Economic Research.* Guides to official sources, No. 1: Labour statistics. Material collected by the Ministry of Labour and National Service. London: H.M.S.O., 1948. iv, 32 pp. 9½″. 9*d.*

*Labour and National Service, Ministry of*

Cotton Manufacturing Commission. Interim report of an enquiry into wages arrangements and methods of organization of work in the cotton manufacturing industry. London: H.M.S.O., 1948. 63 pp. 9½″. 1*s.* 3*d.*

Interim index of retail prices, method of construction and calculation. (Industrial Relations Handbook, 1944, supplement No. 2, January, 1948.) London: H.M.S.O., 1948. 30 pp. 8½″. 6*d.*

*Royal Commission on the Press.* Minutes of evidence taken before the Royal Commission on the Press, days 1–38, June 19, 1947–June 10, 1948. London: H.M.S.O., 1948. 9½″. 35 parts.

*Scientific and Industrial Research, Department of.* Fuel research: the winning, harvesting and utilization of peat. London: H.M.S.O., 1948. iv, 24 pp. 9½″. 6*d.*

*Scotland, Department of Agriculture for.* Scottish farm rents and estate expenditure: report of an enquiry into farm rents and landowners' expenditure on maintenance and improvements of agricultural estates in Scotland. Edinburgh: H.M.S.O., 1948. iv, 224 pp. 9½″. 6*d.*

*Scottish Home Department.* Return of rates in Scotland, 1945/46, 1946/47 and 1947/48. Rateable values 1947/48 and population 1947. Edinburgh: H.M.S.O., 1948. 16 pp. 9½″. 4*d.*

*Scottish Office.* Industry and employment in Scotland, 1947. Edinburgh: H.M.S.O., 1948, Cmd. 7459. 91 pp. 9½″. 1*s.* 6*d.*

*Supply, Ministry of.* Directorate of Royal Ordnance Factories. Explosives—Industrial experimentation, 3rd edition, by K. A. Brownlee. London: H.M.S.O., 1948. 169 pp. 9¾″. 3*s.*

*Trade, Board of*

Export Promotion Department: prospects for United Kingdom exports in Canada and the U.S.A. . . . London: H.M.S.O., 1948. 32 pp. 9¾″. 6*d.*

Industrial Organisation and Development Act, 1947. Proposals for a cotton industry development council order. London: H.M.S.O., 1948. 14 pp. 9½″. 4*d.*

Overseas Economic Surveys: Argentina, Oct., 1947. vi, 128 pp. 2*s.* 6*d.* Brazil, Jan., 1948. vi, 91 pp. 2*s.* Egypt, Nov., 1947. vi, 87 pp. 2*s.* Turkey, Sept., 1947. 228 pp. 4*s.* London: H.M.S.O., 1948. 4 vols. 9½″.

Report of the United Kingdom Trade Mission to China, October to December, 1946. . . . London: H.M.S.O., 1948. 231 pp. Maps. 9½″. 5*s.*

Working Party reports: China-clay. xii, 68 pp. Plans. 9¾″. 2*s.* 6*d.* Jute. x, 121 pp. 9¾″. 2*s.* 6*d.* London: H.M.S.O., 1948.

*Treasury*

Capital investment in 1948. London: H.M.S.O., 1947, Cmd. 7268. 32 pp. 9¾″. 6*d.*

Economic survey for 1948. London: H.M.S.O., 1948, Cmd. 7344. 62 pp. 9½″. 1*s.*

National income and expenditure of the United Kingdom, 1947. London: H.M.S.O., 1948, Cmd. 7371. 49 pp. 9½″. 1*s.*

CC-0. In Public Domain. Gurukul Kangri Collection, Haridwar

Digitized by Arya Samaj Foundation Chennai and eGangotri



Statement on personal incomes, costs and prices. London: H.M.S.O., 1948, Cmd. 7321. 4 pp. 9½″. 1*d.*

United Kingdom balance of payments 1946 and 1947. London: H.M.S.O., 1948, Cmd. 7324. 6 pp. 9½″. 2*d.*

Working conditions in the Civil Service: report by a study group appointed by H.M. Treasury. London: H.M.S.O., 1948. 164 pp. Appendices. 9¾″. 4*s.*

*Works, Ministry of*

The distribution of building materials and components: report of the committee of enquiry appointed by the Minister of Works. London: H.M.S.O., 1948. 144 pp. 9½″. 2*s.* 6*d.*

Summary report of the Ministry of Works for the period 9th May, 1945, to 31st December, 1946. London: H.M.S.O., 1947, Cmd. 7279. iv, 60 pp. 9¾″. 1*s.*

Temporary housing programme. London: H.M.S.O., 1948, Cmd. 7304. 12 pp. 9¾″. 3*d.*

## (b) Other National and International Publications

**Colombia**

*Controlaria General de la Republica. Direccion General del Censo.* Primer censo industrial de Colombia, 1945. Departamento de Bolivar. Departamento del Cauca. Departamento de Cundinamarca. Departamento de Narino. Departamento Norte de Santander. Departamento de Santander. Bogota. 1947. 6 vols. 9¾″.

**Cyprus**

*Census Office.* Census of Cyprus, 1946: brief summary of final population figures. Nicosia, 1947. 4 pp. 13½″.

**Denmark**

*Statistiske Department.* Nationalproduktet og nationalindkomsten 1930–1946 . . . with a summary in English (Statistiske meddelelser, 4, 129, 5). Copenhagen, 1948. 223 pp. 9″.

**Egypt**

*Ministry of Finance, Government Commissioner's Office.* Cereals consumption in Egypt: statistics by Mahmoud Abdel Karim, introduction and conclusions by J. I. Craig. Cairo, 1947. 18 pp. 10½″.

*Ministry of Finance, Statistical Department.* Census of industrial production, 1944. Cairo, 1947. vi, 35 pp. 12¼″.

**Eire**

*Department of Industry and Commerce.* Ireland. Census of industrial production, 1938–1944. Dublin: Stationery Office, 1947. xiv, 177 pp. 10″. 3*s.* 6*d.*

**France**

*Institut National de la Statistique et des Études Économiques, Direction de la Statistique Générale.* Études théoriques No. 3. Leçons sur l'estimation statistique Paris, 1947. 139 pp. 10½″.

Premiers résultats du recensement général de la population, effectue le 10 mars 1946. Paris, 1947. 61 pp. 9¾″.

Résultats statistiques d'une enquête sur la propriété bâtie dans 61 agglomerations de plus de 30,000 habitants. Paris, 1947. 387 pp. 10¾″.

**Germany**

*Office of Military Government for Germany (U.S.) Ministerial Collecting Center Economics Division APO* 742. Statistisches Handbuch von Deutschland . . . Statistical handbook of Germany . . . Parts I, II, II Annex 1, 2 and 3, III (A, B1, B2), IV, V. Fürstenhagen, Prepared by Working Group Statistics, Ministerial Collecting Center, 1946. 10 vols. 13″.

*Statistisches Reichsamt*

Die Einkommen- und Körperschaftsteuerveranlagungen für 1937 und 1938. (Statistik des Deutschen Reichs, Band 580.) Berlin, 1941. 274 pp. 11¾″.

Die Viehwirtschaft 1938/39 (S.D.R. 543 I/II). Berlin, 1941–2. 2 vols. 11¾″.

Volks- Berufs- und Betriebszählung vom 17 Mai 1939, Berufszählung. Die Berufstätigkeit der Bevölkerung des Deutschen Reichs. (S.D.R. 556 1, 2.) Berlin, 1942. 2 vols. 11¾″.

CC-0. In Public Domain. Gurukul Kangri Collection, Haridwar

Digitized by Arya Samaj Foundation Chennai and eGangotri



**Norway**

*Statistisk Sentralbyrå.* Foreløpige resultater av folketellingen i Norge, 3 desember 1946. Oslo, 1947. 28 pp. 9¼″.

**Poland**

*Central Statistical Office.* Statistical year book of Poland, 1947. Warsaw, 1947. xvi, 195 pp. 8″.

**Portugal**

*Instituto Nacional de Estatística.* 8 Recenseamento geral da população. No continente e ilhas adjacentes em 12 de dezembro de 1940. Vol. 25. Memoria descritiva. Lisboa, 1947. lviii, 224 pp. 12½″.

**Southern Rhodesia**

*Department of Statistics*

Fifth report on the census of industrial production, 1938–1945. Salisbury, 1947. iii, 38 pp. 13″.

Report on the census of population of Southern Rhodesia held on 7th May, 1946. Part 7. Natives in employment. Salisbury, 1948. 28 pp. 13″.

**Spain**

*Instituto Nacional de Estadistica.* Tablas de mortalidad de la población española, 1930–31. Madrid, 1946. 200 pp. 9½″.

**Switzerland**

*Bureau Fédéral de Statistique*

Administration Fédéral des Contributions. Impôt fédéral pour la défense nationale 3e période. Sacrifice pour la défense nationale 1945. Suisse. 1, 2, 3. (Statistiques de la Suisse, 192, 195, 203.) Bern, 1948. 3 vols. 11¾″.

——Kanton Aargau (S.S. 212). 61 pp. Kanton Basel-Stadt (S.S. 211). 45 pp. Kanton Bern (S.S. 199). 108 pp. Canton de Fribourg (S.S. 201). 65 pp. Canton de Genève (S.S.206). 68 pp. Kanton Glarus (S.S. 196). 45 pp. Kanton Graubünden (S.S. 200). 65 pp. Kanton Nidwalden (S.S. 207). 45 pp. Kanton St. Gallen (S.S. 208). 76 pp. Kanton Schaffhausen (S.S. 194). 45 pp. Kanton Schwyz (S.S. 205). 45 pp. Kanton Solothurn (S.S. 202). 53 pp. Kanton Thurgau (S.S. 204). 49 pp. Canton de Vaud (S.S. 210). 96 pp. Kanton Zürich (S.S. 186). 98 pp. Bern, 1948. 15 vols. 11¾″.

Recensement fédéral de la population, 1941. 20. Population Suisse. Répartie par cantons et communes d'origine. 21. Suisse. Tableaux. 1ère partie. (S.S. 177, 198.) Bern, 1947–8. 2 vols. 11¾″.

Recensement fédéral des entreprises 24 août 1939. Vol. V. Les entreprises en Suisse 1939. (S.S. 171.) Bern, 1947. 38, 81 pp. 11¾″.

Tables de mortalité de la population suisse 1931/41 et 1939/44. Nombres de commutation et primes pures. (S.S. 197.) Bern, 1948. 121 pp. 11¾″.

**Union of South Africa**

*Office of Census and Statistics.* Census of Europeans, 6th May, 1941. Report on the wages of domestic servants. Pretoria, 1946. iii, 35 pp. 12″.

*Social and Economic Planning Council.* Report No. 9. The native reserves and their place in the economy of the Union of South Africa. Pretoria, 1946. 90 pp. Maps. 12¾″. 10*s.*

Summary of report No. 9 . . . Pretoria, 1946. 6 pp. 12¾″. 1*s.*

**United Nations**

*Department of Economic Affairs.* Survey of current inflationary tendencies. (Series A, No. 2.) Lake Success, 1947. (7.) 86 pp. 9″. 2*s.* 6*d.*

*Food and Agriculture Organisation.* FAO Commodity Series. 2, Wheat. 55 pp. 1*s.* 3*d.* 3, Livestock and meat. 49, xi pp. 1*s.* 3*d.* 4, Dairy products. 36 pp. 1*s.* 3*d.* 5, Poultry and eggs. 27 pp. 1*s.* 3*d.* 6, Vegetables and fruits, No. 1 (a study of current problems in Europe). 35 pp. 1*s.* 3*d.* 7, Rice bulletin, No. 1. 32 pp. 1*s* 3*d.* Washington, 1948. 6 parts. 11″.

CC-0. In Public Domain. Gurukul Kangri Collection, Haridwar

Digitized by Arya Samaj Foundation Chennai and eGangotri



*United Nations Relief and Rehabilitation Administration.* Italian Mission: survey of Italy's economy. Rome, UNRRA, 1947. xvi, 504 pp. 12¼″.

**United States of America**

*Bureau of the Census.* Notes on precision of sample estimates: technical notes on the formulas used to evaluate the precision of data. (Reprint of appendix section of the special study—value of farm products by color and tenure of farm operator—based upon sample data from the sixteenth census, pp. 283–291.) Washington, Supt. of Documents, 1945. 11½″. 10*c*.

## II.—AUTHORS AND MISCELLANEOUS

ALLIANCE NATIONALE CONTRE LA DÉPOPULATION. Compte rendu des trois journées pour l'étude scientifique du vieillissement de la population, 22–24 avril 1948. 1. Historique des journées d'études; discours prononcés aux séances plénières, conférence de M. Sauvy sur "Le problème du vieillissement devant la conscience nationale." Travaux de la Section de Sociologie. 116 pp. 2. Travaux de la Section de Démographie. 135 pp. 3. Travaux de la Section du Vieillissement Individuel. Conférence du Dr. F. Bourlière sur la biologie de la sénescence. 139 pp. 4. Travaux de la Section d'Économie politique et de la Section des Études Diverses. 119 pp. 5. Travaux de la Section de l'Organisation du Travail. 79 pp. Paris, 1948. 5 vols. 50*f*. each.

BANAVALIKAR (A. S.). The textile policy of Madras Government (a study of its economic possibilities). Delhi: Mrs. Kamala Banavalikar, 1947. viii, 64 pp. 8¾″. 4*s*.

BARTLETT (M. S.). Smoothing periodograms from time-series with continuous spectra. (*Nature* **161** (1948) 686.) 3 pp. 8¼″.

BAUER (P. T.). The rubber industry: a study in competition and monopoly. London: Longmans, 1948. xiii, 404 pp. 9¾″. 25*s*.

BENHAM (FREDERIC). Economics: a general textbook for students. 4th ed. London: Pitman, 1948. xvii, 542 pp. 12*s*. 6*d*.

BÖKER (HUGO). Die deutsche Ernährungswirtschaft und der deutsche Aussenhandel. Kiel: Institut für Weltwirtschaft an der Universität Kiel, 1948. vi, 91 pp. 7 tables. 8″.

BRAMBILLA (FRANCESCO). Esercizi e complementi di statistica metodologica. Pt. 1a. Milan: Universita Commerciale Luigi Bocconi, 1944. [8], 365 pp. 9½″. 300*l*.

BRITISH IRON AND STEEL FEDERATION. Statistics of the iron and steel industries of overseas countries. [Cover title: Statistical year book for 1946, Part 2, Overseas countries.] London, 1948. xiv, 328 pp. 9″. 15*s*.

BROWN (R. L.). Statistical report on the size grading of coal. London: Brit. Colliery Owners Research Assoc. and Brit. Coal Utilisation Research Assoc., 1947. 44 pp. 9¾″.

BROWNLEE (K. A.) and others. The biological assay of streptomycin by a modified cylinder plate method, by K. A. Brownlee, C. S. Delves, M. Dorman, C. A. Green, E. Grenfell, J. D. A. Johnson and N. Smith. (*J. Gen. Microbiology* **2** (1948) 40–53.) 10″.

CARTER (C. F.), REDDAWAY (W. B.), and STONE (RICHARD). The measurement of production movements (Univ. of Cambridge, Dept. of Applied Economics Monographs, 1). Cambridge University Press, 1948. vii, 135 pp. 9½″. 12*s*. 6*d*.

CARTER (W. ROGER). Carter's income tax, sur-tax and profits tax (N.D.C.). 4th ed., by G. W. Murphy. London: Gee & Co., 1948. 223 pp. 8½″. 15*s*.

CASSELMAN (P. H.). The relation between farm management factors, milk cost and operator labour earnings: a correlation study analysing the 1937 operations of a sample number of Ontario dairy farms. Eastview, Ontario: New Era Publications. iii, 86 fols. 11″. $1.

CHANDRASEKHAR (S.). Census and statistics in India. Annamalainagar: Annamalai University, 1948. 32 pp. 9½″. 1*r*.

CHESTER (D. N.). The nationalized industries: a statutory analysis. London: Inst. of Public Administration, 1948. 48 pp. 8½″. 2*s*. 6*d*.

COATS (R. H.). Beginnings in Canadian statistics. (*Canad. Hist. Rev.* (1946) 109–130.) 10″.

COLES (K. A.). Accountancy careers. London: Gee & Co., 1948. 87 pp. 8½″. 7*s*. 6*d*.

COLLINS (ARTHUR). Municipal internal audits. 8th ed. London: Gee & Co., 1948. 365 pp. 8½″. 27*s*. 6*d*.

COMRIE (L. J.). The Twin Marchant Calculating Machine and its application to survey problems. London: Scientific Computing Service, 1945. 40 pp. 11¼″. 10*s*.

Conurbation: a planning survey of Birmingham and the Black Country by the West Midland Group. London: Architectural Press, 1948. iv, 288 pp. 11¼″. 30*s*.

COPPOCK (JOSEPH D.). The food stamp plan: moving surplus commodities with special purpose money. (*Trans. Amer. Philos. Soc.* 37 (1947) 131–200.) 11⅜″. $1.50.

CC-0. In Public Domain. Gurukul Kangri Collection, Haridwar

Digitized by Arya Samaj Foundation Chennai and eGangotri



DEANE (PHYLLIS). The measurement of colonial national incomes: an experiment. (National Inst. of Economic and Social Research, Occasional Papers, xii.) Cambridge University Press, 1948. xvi, 173 pp. 9½″. 12*s.* 6*d.*

ECKERT (W. J.). Punched card methods in scientific computation. New York: Thomas J. Watson Astronomical Computing Bureau, 1940. ix, 136 pp. 18*s.*

ELFVING (G.). A simple method of deducing certain distributions connected with multivariate sampling. (*Skand. Akturietidskrift* (1947) 56–74.) Uppsala. 9¼″.

EVANS (George H.). Business incorporations in the United States, 1800–1934. (National Bureau of Economic Research, 49.) New York: N.B.E.R., 1948. viii, 184 pp. 11″. $6.

FINNEY (D. .). The adjustment of biological assay results for variation in concomitant observations. (*J. Hyg. Camb.* **45** (1947) 397–406.) 10¼″.

—— Application of statistical methods to food problems. (*Nature*, **159** (1947), 36.) 8½″. 6 pp.

—— The construction of confounding arrangements. (*Empire J. Exp. Agric.* **15** (1947) 107–112.) 9½″.

—— Errors of estimation in inverse sampling. (*Nature* **160** (1947) 195.) 8½″.

—— The estimation from individual records of the relationship between dose and quantal response. (*Biometrika* **34** (1947) 320–334.) 10¾″.

—— The Fisher-Yates test of significance in 2 × 2 contingency tables. (*Biometrika* **35** (1948) 145–156.) London Biometrika Office, 1948. 10¾″. 2*s.* 6*d.*

—— The inevitability of statistics. (*Analyst* **73** (1948) 2–6.) 9¾″.

—— Orthogonal partitions of the 6 × 6 Latin squares. (*Ann. Eugenics* **13** (1946) 184–196.) 10¾″.

—— Random association of points on a lattice. (*Nature* **160** (1947) 714.) 8½″.

—— Statistical science and agricultural research. (*Math. Gaz.* **31** (1947) 21–30.) 8½″.

FISHER (RONALD A.) and YATES (FRANK). Statistical tables for biological, agricultural and medical research . . . 3rd ed. London and Edinburgh: Oliver & Boyd, 1948. viii, 112 pp. 11″. 16*s.*

FLORENCE (P. SARGANT). Investment, location and size of plant: a realistic inquiry into the structure of British and American industries, by P. S. Florence, assisted by W. Baldamus. (National Inst. of Economic and Social Research, Economic and Social Studies, vii.) Cambridge University Press, 1948. xiii, 211 pp. 8½″. 18*s.*

FLORIN (RAYMOND). Dynamique économique. Soissons (Aisne) 1948. vi, 115 pp. 9½″. 500*f.*

FRANKEL (S. HERBERT). Whither South Africa? An economic approach. Oxford: Blackwell, 1948. 14 pp. 9½″. 9*d.*

FREEMAN (HARRY), editor. Construction of mortality and other tables, by J. L. Anderson and J. B. Dow. (Actuarial Statistics, II.) For the Institute of Actuaries and the Faculty of Actuaries, Cambridge University Press, 1948. xvi, 281 pp. 8½″. 21*s.*

FREEMAN (H. A.), FRIEDMAN (MILTON), MOSTELLER (FREDERICK), and WALLIS (W. ALLEN), editors. Sampling inspection: principles, procedures and tables for single, double, and sequential sampling in acceptance inspection and quality control based on percent defective, by the Statistical Research Group, Columbia University. New York and London: McGraw-Hill, 1948. xx, 395 pp. 9″. 31*s.* 6*d.*

GHOSH (SATIS CHANDRA). The economic and commercial publications of the post-graduate teachers of Calcutta University. Calcutta University, 1948. vii, 80 pp. 8¼″.

GINI (CORRADO). Analisis cualitativo y sintesis cuantitativa en las ciencias sociales. (*Revista Internacional de Sociologia.*)

—— On national income. (*Banca Nazionale del Lavoro, Quarterly Review* **2** (1947) 14 pp.) 11″.

—— Sulla misura della variabilita dei caratteri biometrici. Nota preliminare. (Milan, *Statistica*, **7** (1947), 8 pp.) 9½″.

—— Über statistische Beziehungen und deren Inversion. (*Schweizerische Z. Volksw. Statist.*, **83** (1947), 519–542.) 9½″.

GREENWOOD (MAJOR). Medical statistics from Graunt to Farr. The Fitzpatrick Lectures for the years 1941 and 1943, delivered at the Royal College of Physicians of London in February, 1943. Cambridge: University Press, 1948. [7], 73 pp. 9½″. 6*s.*

—— Some British pioneers of social medicine . . . University of London Heath Clark Lectures, 1946, delivered at the London School of Hygiene and Tropical Medicine. London: Geoffrey Cumberlege, 1948. [6], 118 pp. 8½″. 12*s.* 6*d.*

HALD (A.). The decomposition of a series of observations composed of a trend, a periodic movement and a stochastic variable. Copenhagen: G. E. C. Gads Forlag, 1948. 134 pp. 9¾″.

CC-0. In Public Domain. Gurukul Kangri Collection, Haridwar

Digitized by Arya Samaj Foundation Chennai and eGangotri



HANNA (FRANK A.), PECHMAN (JOSEPH A.) and LERNER (SIDNEY M.). Analysis of Wisconsin income. (Studies in Income and Wealth, 9.) New York: National Bureau of Economic Research, 1948. xviii, 261 pp. 9¼″. $3.50.

HARROD (R. F.). Towards a dynamic economics: some recent developments of economic theory and their application to policy. London: Macmillan, 1948. ix, 169 pp. 7½″. 7*s*. 6*d*.

HEECKT (HUGO). Die deutsche Seeschiffahrt und der deutsche Aussenhandel. Berlin: E. Schmidt verlag, 1947. 100 pp. 8¼″.

HENDERSON (SIR HUBERT). The uses and abuses of economic planning. The Rede Lecture delivered in the University of Cambridge, May 9, 1947. Cambridge University Press, 1947. 32 pp. 7¼″. 1*s*. 6*d*.

HERDAN (G.). Quality control by statistical methods. London: Nelson, 1948. xii, 251 pp. 8″. 21*s*.

HILL (A. BRADFORD). Principles of medical statistics . . . 4th ed., revised and enlarged. London: The Lancet, 1948. xi, 252 pp. 8½″. 10*s*. 6*d*.

—— Statistics in the medical curriculum? (*Brit. Med. J.*, **2** (1947), 366–.) 8 pp. 8½″.

HOBSON (J. W.) and HENRY (H.). The Hulton readership survey, 1948 . . . London: Hulton Press, 1948. 56 pp. 18″ × 14½″.

HORACE PLUNKETT FOUNDATION. Year book of agricultural co-operation, 1947. Cambridge: Heffer, 1948. [2], 342 pp. 8¼″. 15*s*.

HUBER (MICHEL). Institut de Statistique de l'Université de Paris. Cours de statistique appliquée aux affaires . . . V. Statistiques d'entreprises. (Actualités Scientifiques et Industrielles 1036.) Paris: Hermann, 1948. 285 pp. 10″.

INSTITUTE OF ACTUARIES. Institute of Actuaries 1848–1948. Exhibition illustrating the history of actuarial science in Great Britain with special reference to the Institute of Actuaries. Catalogue. London, 1948. [6], 18 pp. 8½″.

INSTITUTE OF MUNICIPAL TREASURERS AND ACCOUNTANTS. Return of rates (England and Wales). 1948–49. London: I.M.T.A., 1948. 111 pp. 8″.

INTER AMERICAN STATISTICAL INSTITUTE. Bibliography of selected statistical sources of the American nations: a guide to the principal statistical materials of the 22 American nations, including data, analyses, methodology, and laws and organization of statistical agencies . . . Washington, D.C.: Inter American Statistical Institute, 1947. xvi, 689 pp. 9″. $7.50.

JONES (FRANK H.). The accounting requirements of the Companies Act, 1947. London: Brit. Assoc. of Accountants and Auditors, 1948. 26 pp. 8½″.

KALDOR (NICHOLAS) and SILVERMAN (RODNEY). A statistical analysis of advertising expenditure and of the revenue of the press. (Nat. Inst. of Economic and Social Research, Economic and Social Studies, viii.) Cambridge University Press, 1948. xiv, 200 pp. 9¼″. 15*s*.

KANIEVSKY (I.). Social policy and social insurance in Palestine. Tel-Aviv: General Federation of Jewish Labour in Eretz-Israel, 1947. 46 pp. 9″.

KENDALL (MAURICE G.). The advanced theory of statistics . . . Vol. II. London: Griffin, 1946. vii, 521 pp. 10½″. (Presented by Mr. R. H. Garstang.)

KUCZYNSKI (JURGEN). Studien zur Geschichte des deutschen Imperialismus. Band I. Monopole und Unternehmerverbände. Mit Anhang: Bibliographie zur Monopolfrage von Hildegard Alberts. Berlin: Dietz Verlag, 1948. 403 pp. 8″.

KUCZYNSKI (R. R.). Demographic survey of the British colonial empire. Vol. I. West Africa. Issued under the auspices of the Royal Institute of International Affairs. London: Geoffrey Cumberlege, 1948. xiii, 821 pp. 9¼″. 75*s*.

LEAKE (P. D.). Commercial goodwill: its history, value, and treatment in accounts. 4th ed. London: Gee & Co., 1948. xiii, 201 pp. 8½″. 17*s*. 6*d*.

—— Depreciation and wasting assets and their treatment in computing annual profit and loss . . . 5th ed. London: Gee & Co., 1948. xxviii, 250 pp. 8½″. 20*s*.

LEHMANN (E. H.). On families of admissible tests. (*Ann. Math. Statist.*, **18** (1947), 97–104.) 10″.

—— On optimum tests of composite hypotheses with one restraint. (*Ann. Math. Statist.*, **18** (1947), 473–494.) 10″.

—— and SCHEFFE (H.). On the problem of similar regions. (*Proc. Nat. Acad. Sci. Wash.*, **33** (1947), 382–386.) 10″.

LEVER BROTHERS, & UNILEVER LTD. Rebuilding Europe's fat supplies: the problem and how to meet it. London: Lever Bros., 1947. 24 pp. 8″.

MACBEATH (ANGUS). Depreciation and renewal of assets having fluctuating values. London: Gee & Co., 1948. 35 pp. 8½″. 4*s*.



CC-0. In Public Domain. Gurukul Kangri Collection, Haridwar

Digitized by Arya Samaj Foundation Chennai and eGangotri



MANCE (SIR OSBORNE). International road transport, postal, electricity and miscellaneous questions. (International Transport and Communications.) Oxford University Press (under the auspices of the Royal Institute of International Affairs), 1947. viii, 258 pp. 8½″. 12*s*. 6*d*.

MEADE (JAMES EDWARD). Planning and the price mechanism: the Liberal-Socialist solution. London: Allen & Unwin, 1948. xiv, 130 pp. 7¼″. 8*s*. 6*d*.

MEADE (J. E.) and STONE (RICHARD). National income and expenditure. 2nd ed. Cambridge: Bowes & Bowes, 1948. 7¼″. 45 pp. 2*s*. 6*d*.

MENTHA (GÉRALD). Les causes de décès en Suisse, étudiées à la lumière de la démographie actuelle et de la démographie potentielle. Geneva: Georg & Cie, 1948. 240 pp. 9¼″.

MORRELL (A. J. H.). An introduction to index numbers. London: H. F. L. (Publishers), 1948. 48 pp. 8¼″. 4*s*. 6*d*.

MURPHY (G. W.). Carter's income tax, sur-tax and profits tax (N.D.C.), 4th ed. London: Gee & Co., 1948. 223 pp. 8½″. 15*s*.

MURRAY & CARTER. Supplement to Murray and Carter's guide to income tax practice, 16th ed., by Herbert Edwards and Alan M. Edwards. London: Gee & Co., 1948. 8½″. 5*s*.

NAGEL (ERNEST). Principles of the theory of probability (International Encyclopedia of Unified Science, 1, No. 6). Chicago University Press, 1947. vii, 80 pp. 9½″. 5*s*.

NAIDU (B. V. NARAYANASWAMY). State and economic life. Sir Kikabhai Premchand Readership Lectures. Delhi University Press, 1947. 140 pp. 9¾″.

O'BRIEN (GEORGE). The phantom of plenty. Dublin: Clonmore & Reynolds, 1948. iv, 75 pp. 8½″. 4*s*. 6*d*.

OFFICE MANAGEMENT ASSOCIATION. Clerical salaries analysis 1948 (as at 1st March, 1948). London: O.M.A., 1948. 71 pp. 9½″. 21*s*.

PEMBER & BOYLE. British Government securities in the twentieth century (first supplement, March, 1948). London: for private circulation, 1948. 20 pp., charts. 8½″ × 13″.

PHAIR (JOHN J.), SCHOENBACH (EMANUEL B.) and MERRELL (MARGARET). Chemoprophylaxis in the prevention of disease with especial reference to meningococcal infections. 1. A comparative study of the absorption, persistence and excretion of four sulfonamide compounds. (*Human Biology*, **18** (1946), 171–203.) 9½″.

Political and Economic Planning. Population policy in Great Britain. A report by P.E.P. London: P.E.P., 1948. 227 pp. 9¾″. 15*s*.

Proceedings of the Sixth International Conference of Agricultural Economists, held at Dartington Hall, England, August 28th to September 6th, 1947. London: Geoffrey Cumberlege, 1948. xiii, 508 pp. 9″. 25*s*.

QURESHI (ABWAR IQBAL). The future of the co-operative movement in India . . . Forewords by J. Coatman and Vera Anstey. Madras, London, etc.: Geoffrey Cumberlege, 1947. xi, 166 pp. 8½″. 10*s*. 6*d*.

RANGNEKAR (S. B.). Imperfect competition in international trade, by S. Rangnekar . . . edited by J. J. Anjaria . . . Bombay, etc.: Geoffrey Cumberlege, 1947. xvi, 187 pp. 8½″. 27*s*.

RHODES (E. C.). Elementary statistical methods . . . London: Routledge, 1945. v, 242 pp. 8½″.

RITT (JOSEPH FELS). Integration in finite terms; Liouville's theory of elementary methods. New York: Columbia University Press, 1948 (London: Geoffrey Cumberlege). vii, 100 pp. 8½″. 15*s*.

RODRIGUES (MILTON DA SILVA). Breve noticia sobre o ensino da estatistica no Brasil. (*Rev. Brasileira Estatistica*, **8** (1948), 249–254.) 10½″.

RUSSELL (THOMAS). Commercial advertising: six lectures at the London School of Economics and Political Science (University of London), Lent Term, 1919, with additions, including introduction and appendix. London: Putnam's, 1920. x, 306 pp. 8½″.

SAMUELSON (PAUL ANTHONY). Foundations of economic analysis (Harvard Economic Studies, lxxx). Cambridge, Mass.: Harvard University Press, 1948 (London: Geoffrey Cumberlege). xii, 447 pp. 8½″: 42*s*.

SCHRÖDINGER (ERWIN). Statistical thermodynamics: a course of lectures delivered in January-March, 1944, at the School of Theoretical Physics, Dublin Institute for Advanced Studies. Cambridge University Press, 1948. [5], 88 pp. 7½″. 6*s*.

SCHUMANN (T. E. W.). Mathematical tables for fitting polynomials to an evenly-spaced series of data. Pretoria: Meteorological Office. Department of Transport, 1948. 26 fols. 8″ × 13″.

SIMKINS (JOHN G.). Accounts from incomplete records. London: Gee & Co., 1948. vii, 64 pp. 8½″. 12*s*. 6*d*.

CC-0. In Public Domain. Gurukul Kangri Collection, Haridwar

Digitized by Arya Samaj Foundation Chennai and eGangotri



SIMMONDS (REGINALD CLAUD). The Institute of Actuaries 1848–1948: an account of the Institute of Actuaries during its first one hundred years, by Reginald Claud Simmonds. Prepared by order of the Council in connexion with the Centenary Celebrations. London: Institute of Actuaries, 1948. xii, 318 pp. 8½″. (Presented by the Institute.)

SMITH (EDWARD S.). Control charts: an introduction to statistical quality control . . . New York & London: McGraw-Hill, 1947. xi, 161 pp. 9″. 15*s*.

SOCIETY OF MOTOR MANUFACTURERS AND TRADERS. The motor industry of Great Britain, 1948. London: S.M.M.T., Statistical Dept., 1948. 334 pp. 9½″. 30*s*. (Presented by Mr. C. V. Ford.)

SOLOMON (L.). Statistical estimation. (*J. Inst. Actu. Students' Soc.*, **8** (1948), 144–173, 213–234.) 8½″.

STIGLER (GEORGE J.). Trends in output and employment. (Twenty-fifth Anniversary Series, 4.) New York: National Bureau of Economic Research, 1947. ix, 67 pp. 9″. $1.

THURSTONE (L. L.). Multiple-factor analysis: a development and expansion of *The Vectors of Mind* . . . University of Chicago Press, 1947 (London: Cambridge University Press). xix, 535 pp. 9″. 42*s*.

VAJDA (S.). On the constituent items of the reduction and the remainder in the method of least squares. (*Ann. Math. Statist.*, **16** (1945), 381–386.) 10″.

WANDER (HILDE). Bevölkerung, Arbeitspotential und Beschäftigung im britisch-amerikanischen Besatzungsgebiet. Kiel: Institut für Weltwirtschaft an der Universität Kiel, 1948. vi, 90 pp. 8″.

WINSOR (CHARLES P.). Which regression? (*Biometrics Bull.*, **2** (1946), 101–109.) 9″.

WISHART (JOHN). The cumulants of the $z$ and of the logarithmic $\chi^2$ and $t$ distributions. (*Biometrika*, **34** (1947), 170–178.) 10¾″.

—— Note on the probability distribution arising in the study of the Institute's examinations. (*J. Inst. Actu. Students' Soc.*, **6** (1947), 140–143.) 8½″.

—— Proof of the distributions of $\chi^2$, of the estimate of variance, and of the variance ratio. (*J. Inst. Actu. Students' Soc.*, **7**, 98–103.) 8½″.

—— The variance ratio test in statistics. (*J. Inst. Actu. Students' Soc.*, **6** (1946), 172–184.) 8½″.

WORDEN (ALASTAIR N.), editor. The U.F.A.W. handbook on the care and management of laboratory animals . . . with an appendix on statistical analysis by Major C. W. Hume . . . London: Baillière, Tindall & Cox, 1947. xvi, 368 pp. 9″. 31*s*. 6*d*.

CC-0. In Public Domain. Gurukul Kangri Collection, Haridwar

Digitized by Arya Samaj Foundation Chennai and eGangotri

CC-0. In Public Domain. Gurukul Kangri Collection, Haridwar

Digitized by Arya Samaj Foundation Chennai and eGangotri



# INDEX TO VOL. CXI.

## YEAR 1948.

(Statistical and Current Notes are indicated by the letters S.N. and C.N. respectively.)


| | PAGE |
|---|---|
| *Accounting Research.* (C.N.) | 251 |
| ADDITIONS to the Library | 383 |
| ANNUAL Abstract of Statistics. (C.N.) | 88 |
| ——— General Meeting | 346 |
| ——— REPORT of the Council | 346 |
| ANSCOMBE (F. J.). The validity of comparative experiments | 181–200 |
| Analysis of randomized experiments | 182 |
| General remarks on randomization | 187 |
| Other conditions for validity | 189 |
| Rival systems of inference | 190 |
| Validity of experiments | 195 |
| Appendix | 198 |
| *Discussion:* Dr. Irwin; Prof. Barnard; Prof. Fisher; Prof. Pearson; Dr. Yates; Mr. Kendall; Dr. Isserlis; Mr. Box; Mr. Haycocks; Mr. Walton; Mr. Anscombe in reply | 200–211 |
| BANK of England weekly returns | 96 |
| BIRTHDAY HONOURS. Fellows of the Society included. (C.N.) | 90 |
| BOOKS. *Reviews of Statistical and Economic books:* | |
| Accounting Research. (C.N.) | 251 |
| Balogh (T.). Studies in financial organization | 371 |
| Collins (A.). Municipal internal audits | 372 |
| Commonwealth Economic Committee publications. (C.N.) | 169 |
| Economic Survey for 1949 (Cmd. 7647). (S.N.) | 374 |
| Elsas (Dr.). German prices and wages. (C.N.) | 169 |
| Gopal (M. H.). The theory of excess profits taxation | 243 |
| Hald (A.). Statistiske Metoder | 369 |
| Hill (A. B.). Principles of medical statistics | 164 |
| Huber (M.). Cours de statistique appliquée aux affaires: V. Statistiques d'entreprises | 240 |
| Jacoby (N. H.) and Saulnier (R. J.). Business finance and banking | 371 |
| Kelley (T. L.). Fundamentals of Statistics | 163 |
| Kirk (D.). Europe's population in the inter-war years | 165 |
| Leake (P. D.). Commercial goodwill: its history, value and treatment in accounts | 245 |
| Leake (P. D.). Depreciation and wasting assets and their treatment in computing annual profit and loss | 245 |
| Meade (J. E.). Planning and the price mechanism. The Liberal-Socialist solution | 370 |
| Mentha (G.). Les causes de décès en Suisse | 240 |
| Mulky (M. A.). The new capital issue market in India | 244 |
| Population policy in Great Britain | 165 |
| Rangnekar (S. B.). Imperfect competition in international trade | 372 |
| Simmonds (R. C.). The Institute of Actuaries, 1848–1948 | 241 |
| Wallace (W.). Enterprise first | 243 |
| OTHER NEW PUBLICATIONS (Shorter Notices). | |
| Benham (F.). Economics | 373 |
| Coles (K. A.). Accountancy careers | 373 |
| Morrell (A. J. H.). An introduction to index-numbers | 373 |
| Simpkins (J. G.). Accounts from incomplete records | 373 |
| Bibliography of selected statistical sources of the American Nations | 373 |
| Burton (J. H.). Costing for control | 373 |
| BRITISH official statistics. (S.N.) | 85, 248 |
| CALCULATING machinery, University of Sheffield's plan for Exhibition. (C.N.) | 169 |
| CAUSES of Death. International list of. (C.N.) | 251 |
| CERTIFICATE examination result | 161 |
| CHURCHILL (WINSTON). On forming a statistical department during the war. (C.N.) | 170 |
| COLET (CLARA ELIZABETH). Obituary | 252 |
| COLLECTION of morbidity data from hospitals. *See* COTTON (H.). | |
| CONFERENCE held by the Society in Oxford | 161 |
| CONSUMER expenditure in India. *See* DESAI (R. C.). | |
| COST OF LIVING subsidies. *See* JONES (Prof. J. H.) | |
| COTTON (H.). The collection of morbidity data from hospitals | 14–32 |
| *Discussion:* Prof. Greenwood; Prof. Hill; Mr. Benjamin; Mr. Heady; Mr. Sutherland; Mr. Maddex; Mr. Mandeville; Mr. Buckland; Dr. Neudenburg; Mr. Cotton in reply | 32–43 |
| COUNCIL. Report of. *See* ANNUAL REPORT of the Council. | |
| DESAI (R. C.). Consumer expenditure in India, 1931–2 to 1940–1 | 261–298 |
| Statistical background | 263 |
| Current values | 264 |
| Consumer expenditure | 265 |
| Reliability | 271 |
| Group distribution of total expenditure | 277 |
| Distribution of food expenditure | 277 |
| *Discussion:* Mr. Jackson; Sir J. Hubback; Dr. Anstey; Sir H. Lindsay; Mr. Stone; Mr. Mittra; Mr. Rhys Jones; Mr. Desai in reply | 298–307 |
| DIPLOMA examinations. Specimen papers | 77 |


CC-0. In Public Domain. Gurukul Kangri Collection, Haridwar

Digitized by Arya Samaj Foundation Chennai and eGangotri




PAGE

ECONOMIC survey for 1949 (Cmd. 7647). (S.N.) . . . . . 374
ELECTIONS to Fellowship 11, 43, 111, 132, 211, 229, 308, 330, 356–58
EXAMINATION for Fellows, regulations, etc. 71, 77

FINANCIAL position of the Society. *See* HERON (DAVID).
FIRE CENSUS and technical field and intelligence work of the Joint Fire Research Organisation. *See* WALLACE (J.).

GREENWOOD (MAJOR). Medical Statistics 230

HERON (DAVID). On the financial position of the Society: the Inaugural Address, 1947 . . . . . 1–9
*Proceedings:* Lord Woolton; Prof. Greenwood . . . . . 9–10
HOUBLON-NORMAN FUND. Awards. (C.N.) 90

*Indian Society of Agricultural Statistics, Journal of the.* First number. (C.N.) 375
INDUSTRIAL Applications Group. Proceedings . . . . . 238
INDUSTRIAL productivity in England and Scotland. *See* SINGER (H. W.) and LESER (C. E. V.).
*Instituto Brasileiro de Geografia e Estadistica.* Books and reports. (C.N.) . 375
*International* Congress of Mathematicians. (C.N.) . . . . . 169
*International Statistical Institute.* (C.N.). Elections . . . . . 90, 162

JONES (Prof. J. H.). Cost of living subsidies . . . . . 99–103
*Discussion:* Mr. Woodcock; Mr. Bellerby; Prof. Allen; Mr. Ramsbottom; Dr. Bransby; Mr. Wilkins; Mr. Wyatt; Mr. Kinsman; Mr. Spencer; Mr. Longden; Mr. Thayre; Mr. J. E. Allen; Prof. Jones in reply . . 103–111

KENDALL (M. G.). United Kingdom merchant shipping statistics . . . 133–144

LESER (C. E. V.). Industrial productivity in England and Scotland. *See* SINGER (H. W.) and LESER (C. E. V.).
LESLIE (P. H.). On the distribution in time of the births in successive generations 44

MATHEMATICAL tables. Work of calculating. (C.N.) . . . . . 89
*Matters of Life and Death.* (C.N.) . . 88
MEDICAL Statistics. *See* GREENWOOD (Major)
MERCHANT Shipping statistics. *See* KENDALL (M. G.).
*Metron.* Publication of the 15th volume. (C.N.) . . . . . 251
MITCHELL, WESLEY CLAIR. Obituary . 254
MORBIDITY data from hospitals. *See* COTTOM (H.).

NATH (PRAN). Percentage inspection . 235

OBITUARY—Clara Elizabeth Collet . . 252
Wesley Clair Mitchell . . 254
James William Verdier . . 376
ORCUTT (GUY H.). A new regression analyser . . . . . 54

PERCENTAGE inspection. *See* NATH (PRAN).
PERIODICALS. Statistical and Economic articles in recent periodicals 91, 171, 256, 377
PRICES. Retail. (S.N.) . . 86, 167, 249
——— Wholesale. *See Statist*, Editor of.
PROCEEDINGS of Sections. . . . 365
REGISTRATION of the United Kingdom, Northern Ireland and Eire . . 176–179
REVENUE of the United Kingdom . . 94
ROSS (Mrs. K. H.). Working class clothing consumption, 1937–1938 . . . 145

SECTIONS, Proceedings of . . . 365
SINGER (H. W.) and LESER (C. E. V.). Industrial productivity in England and Scotland. . . . . 309–321
Output per head and industrial structure . 310
Factors explaining output differences . 315
Changes between 1924 and 1935 . . 318
*Discussion:* Dr. George; Dr. Rostas; Mr. Lyle; Mr. Browne; Mr. Blacklock; Mr. Orr; Dr. Easterfield; The Chairman; Dr. Isserlis; Mr. Phillips; Mr. Leser in reply . . . . 321–308
SOCIAL and Economic Research, Appointment of a standing Inter-departmental Committee. (C.N.) . . . 89
*Statist*, Editor of. Wholesale prices in 1947.
*Statist* annual index numbers . . . 331
Decennial averages, 1848–57 to 1938–47 . 331
Monthly fluctuations since 1898 . . 332
Summary of index numbers, groups or articles, 1873, 1896, 1911, 1919–47 . 333
Monthly averages by groups, 1945–48 . 334
Quarterly movement of prices . . . 335
Construction of tabular statements . . 336
Silver and gold prices . . . 337–339
Average prices of commodities, 1922–47 . 340–45
STATISTICAL SOCIETY, ROYAL. Amendment of bye-laws . . . . 12
——— Financial position. *See* HERON (DAVID).
STATISTICS, Annual Abstract of. (C.N.) . 88
——— Teaching of. *See* WISHART (JOHN).

TRADE. Oversea trade of the United Kingdom . . . . . 85, 248

UNEMPLOYMENT in the United Kingdom. (S.N.) . . . . . 86, 168
UNITED KINGDOM Merchant shipping statistics. *See* KENDALL (M. G.).
UNITED STATES Civil Service Commission. New specifications for statisticians, examinations. (C.N.) . . . 375

VALIDITY of Comparative Experiments. *See* ANSCOMBE (F. J.).
VERDIER (JAMES WILLIAM). Obituary . 376
VICE-PRESIDENTS appointed . . . 162


CC-0. In Public Domain. Gurukul Kangri Collection, Haridwar

Digitized by Arya Samaj Foundation Chennai and eGangotri




PAGE

WAGE rates, weekly. Ministry of Labour index of . . . . . 167, 249

WALLACE (J.). The Fire Census and technical field intelligence work of the Joint Fire Research Organisation . . 112–126

- Fire Census . . . . . 112
- Library of census reports . . . 113
- Statistical analysis of census reports . 114
- Technical field intelligence work . . 121

*Discussion:* Sir W. Elderton; Mr. Beard; Mr. Tuckey; Lord Falmouth; Mr. Clarke; Major Jackson; Mr. Boss; Mr. Elliott; The President; Mr. Wallace in reply . . . . 126–132

PAGE

WISHART (JOHN). The teaching of statistics . . . . . 212–217

*Discussion:* The President; Prof. Pearson; Mr. Lyle; Mr. Carter; Mr. Connor; Mr. Perks; Mr. Swan; Mr. Seal; Prof. Anderson; Mr. Mason; Mr. Milbourn; Dr. Dudding; Mr. Thornton-Bryar; Mr. Clarke; Mr. Buckland; Dr. Wishart in reply . 217–228

WORKING Class clothing consumption. (*See* Ross (Mrs. K. H.).

YULE (G. UDNY). Honorary Fellowship conferred by the International Statistical Institute. (C.N.) . . . 90


110646

CC-0. In Public Domain. Gurukul Kangri Collection, Haridwar

Digitized by Arya Samaj Foundation Chennai and eGangotri

CC-0. In Public Domain. Gurukul Kangri Collection, Haridwar

Digitized by Arya Samaj Foundation Chennai and eGangotri

CC-0. In Public Domain. Gurukul Kangri Collection, Haridwar

Digitized by Arya Samaj Foundation Chennai and eGangotri

CC-0. In Public Domain. Gurukul Kangri Collection, Haridwar

Digitized by Arya Samaj Foundation Chennai and eGangotri

CC-0. In Public Domain. Gurukul Kangri Collection, Haridwar

Digitized by Arya Samaj Foundation Chennai and eGangotri

सन्दर्भ ग्रन्थ
REFERENCE BOOK

Compiled
1999-2000

CC-0. In Public Domain. Gurukul Kangri Collection, Haridwar

Digitized by Arya Samaj Foundation Chennai and eGangotri

CC-0. In Public Domain. Gurukul Kangri Collection, Haridwar

Digitized by Arya Samaj Foundation Chennai and eGangotri

CC-0. In Public Domain. Gurukul Kangri Collection, Haridwar